TABLE OF CONTENTS OF SPECIAL PROVISIONS

Note: This Table of Contents has been prepared for the convenience of those using this contract with the sole express purpose of locating quickly the information contained herein; and no claims shall arise due to omissions, additions, deletions, etc., as this Table of Contents shall not be considered part of the contract.

Table of Contents

TABLE OF CONTENTS OF SPECIAL PROVISIONS..... 1
CONTRACT TIME AND LIQUIDATED DAMAGES..... 3
NOTICE TO CONTRACTOR - PRE-BID QUESTIONS AND ANSWERS..... 4
NOTICE TO CONTRACTOR - PROJECT DESCRIPTION..... 5
NOTICE TO CONTRACTOR - SUBMITTALS..... 6
NOTICE TO CONTRACTOR - EARLY SUBMITTALS..... 8
NOTICE TO CONTRACTOR - SOLE SOURCE PRODUCTS..... 9
NOTICE TO CONTRACTOR - POTENTIAL FOR ASBESTOS..... 10
CONTAINING MATERIALS..... 10
NOTICE TO CONTRACTOR - PRE-INSTALLATION MEETINGS..... 11
NOTICE TO CONTRACTOR - CLOSEOUT DOCUMENTS..... 12
NOTICE TO CONTRACTOR - UTILITY SERVICE CONNECTIONS AND..... 14
RELOCATIONS..... 14
NOTICE TO CONTRACTOR - CAD FILES..... 15
NOTICE TO CONTRACTOR - ENVIRONMENTAL INVESTIGATIONS..... 16
NOTICE TO CONTRACTOR - SECTION 4.06 AND M.04 MIX..... 20
DESIGNATION EQUIVALENCY AND PG BINDER EQUIVALENCY..... 20
NOTICE TO CONTRACTOR - SUPERPAVE DESIGN LEVEL INFORMATION..... 23
SECTION 1.20 - GENERAL CLAUSES FOR FACILITIES CONSTRUCTION..... 24
SECTION 4.06 - BITUMINOUS CONCRETE..... 30
SECTION M.04 - BITUMINOUS CONCRETE MATERIALS..... 54
ON-THE-JOB TRAINING (OJT) WORKFORCE DEVELOPMENT PILOT..... 77
SMALL CONTRACTOR AND SMALL CONTRACTOR MINORITY..... 81
BUSINESS ENTERPRISES (SET-ASIDE)..... 81
ITEM #0100072A - REMOVAL AND DISPOSAL OF UNDERGROUND..... 92
TANKS..... 92
ITEM #0101000A - ENVIRONMENTAL HEALTH AND SAFETY..... 97
ITEM #0101110A - SOIL AMENDMENT.....107
ITEM #0101117A - CONTROLLED MATERIALS HANDLING.....109
ITEM #0101128A - SECURING, CONSTRUCTION AND DISMANTLING.....116
OF A WASTE STOCKPILE AND TREATMENT AREA.....116
ITEM #0101143A - HANDLING AND DISPOSAL OF REGULATED ITEMS.....119
ITEM #0177150A - GENERAL BUILDING RENOVATION.....124
ITEM #0202315A - DISPOSAL OF CONTROLLED MATERIALS.....125
ITEM #0202640A - 2-INCH GROUNDWATER MONITORING WELL.....130
ABANDONMENT.....130
ITEM #0202642A - ABANDONMENT OF WELLS.....132
ITEM #0969060A - CONSTRUCTION FIELD OFFICE, SMALL.....134
ITEM #0999002A - DISPOSAL OF BUILDINGS.....142
ITEM #1600002A - FUEL ADJUSTMENT COST.....147
ITEM #1700001A - SERVICE CONNECTIONS (ESTIMATED COST).....148
INDEX OF CSI-FORMATTED SPECIFICATIONS.....149
PERMITS AND/OR REQUIRED PROVISIONS.....364

NOVEMBER 16, 2016
FEDERAL AID PROJECT NO. N/A
STATE PROJECT NO. 73-190

LITCHFIELD MAINTENANCE FACILITY TANK REPLACEMENT

Town of Litchfield

The State of Connecticut, Department of Transportation, Standard Specifications for Roads, Bridges, Facilities and Incidental Construction, Form 817, 2016, is hereby made part of this contract, as modified by the Special Provisions contained herein. The current edition of the State of Connecticut Department of Transportation's "Construction Contract Bidding and Award Manual" ("Manual"), is hereby made part of this contract. If the provisions of this Manual conflict with provisions of other Department documents (not including statutes or regulations), the provisions of the Manual will govern. The Manual is available upon request from the Transportation Manager of Contracts. The Special Provisions relate in particular to the LITCHFIELD MAINTENANCE FACILITY TANK REPLACEMENT in the Town of Litchfield.

CONTRACT TIME AND LIQUIDATED DAMAGES

One hundred fifty-four (154) calendar days will be allowed for completion of the work on this project and the liquidated damages charge to apply will be Two Thousand Dollars ($2,000.00) per calendar day.

NOTICE TO CONTRACTOR - PRE-BID QUESTIONS AND ANSWERS

Questions pertaining to DOT advertised construction projects must be presented through the CTDOT Pre-Bid Q and A Website. The Department cannot guarantee that all questions will be answered prior to the bid date. **PLEASE NOTE - at 9:00 am Monday (i.e. typical Wednesday Bid Opening) the project(s) being bid will be closed for questions, at which time questions can no longer be submitted through the Q and A Website.**

Answers may be provided by the Department up to 12:00 noon, the day before the bid. At this time, the Q and A for those projects will be considered final, unless otherwise stated and/or the bid is postponed to a future date and time to allow for further questions and answers to be posted.

If a question needs to be asked the day before the bid date, please contact the Contracts Unit staff and email your question to dotcontracts@ct.gov immediately.

Contractors must identify their company name, contact person, contact email address and phone number when asking a question. The email address and phone number will not be made public.

The questions and answers (if any) located on the Q and A Website are hereby made part of the bid/contract solicitation documents (located on the State Contracting Portal), and resulting contract for the subject project(s). It is the bidder's responsibility to monitor, review, and become familiar with the questions and answers, as with all bid requirements and contract documents, prior to bidding. By signing the bid proposal and resulting contract, the bidder acknowledges receipt of, and agrees to the incorporation of the final list of Q and A, into the contract document.

Contractors will not be permitted to file a future claim based on lack of receipt, or knowledge of the questions and answers associated with a project. All bidding requirements and project information, including but not limited to contract plans, specifications, addenda, Q and A, Notice to Contractors, etc., are made public on the State Contracting Portal and/or the CTDOT website.

NOTICE TO CONTRACTOR - PROJECT DESCRIPTION

The Project consists of replacement of the motor fueling facility, fuel oil storage tank, and oil-water separator on the site of the existing maintenance facility at 452 Bantam Road in Litchfield, Connecticut as shown and described in the Contract.

The work includes replacement of the motor fuel and fuel oil underground storage tanks with aboveground storage tanks, replacement of the motor fuel island with dispensers installed adjacent to the tanks for unleaded gasoline and diesel fuel, replacement of the oil-water separator, and connection to the existing tank monitoring system.

Environmental work associated with the Franklin Maintenance Facility includes work with polluted soils and developing an Environmental Health and Safety Plan, as further specified in the NOTICE TO CONTRACTOR – ENVIRONMENTAL INVESTIGATIONS.

NOTICE TO CONTRACTOR - SUBMITTALS

Unless otherwise noted, the Designer will be the "submittal reviewer."

Any Product Samples that are to be sent to the Designer requiring review for conformance with the Contract shall be transmitted by letter and hand delivered or sent by mail directly to Mr. Christopher J. Bonsignore, P.E., Transportation Principal Engineer, Facilities Design, Bureau of Engineering and Construction, Connecticut Department of Transportation, 2800 Berlin Turnpike, P.O. Box 317546, Newington, CT 06131-7546, Room 3405.

The Engineer will be the "submittal reviewer" for the following materials:

Concrete Mix Design Certifications
Asphalt Mix Design Certifications
Erosion Control Plan and Materials
Demolition Plan
Disposal Plan
Welding (Welder) Certificates
Certified Test Reports, Material Certificates, etc. from Form 817 Standard Items (non "A" Items from Bid List)
"Non-A" items, including those items in CSI-Formatted Specifications

Environmental Compliance will be the "submittal reviewer" for review of work identified in the following special provisions:

1. Item No. 0100072A – Removal and Disposal of Underground Tanks.
2. Item No. 0101000A – Environmental Health and Safety.
3. Item No. 0101110A – Soil Amendment.
4. Item No. 0101117A – Controlled Materials Handling.
5. Item No. 0101128A – Securing, Construction and Dismantling of a Waste Stockpile and Treatment Area.
6. Item No. 0101143A – Handling and Disposal of Regulated Items.
7. Item No. 0202315A – Disposal of Controlled Materials.
8. Item No. 0202640A – 2" Monitoring Well Abandonment.
9. Item No. 0202642A – Abandonment of Wells (Estimated Cost).
10. Item No. 0999002A – Disposal of Buildings.

The Contractor shall send submittals e-mail alerts to the following key personnel:

Designer (Project Engineer):
Designer (Project Manager):
Designer (Consultant Project Manager):
Construction Project Chief Inspector:
Construction Supervising Engineer:

Owner:
Operator:

Add the following for submittals where Environmental Compliance is listed in NOTICE TO CONTRACTOR – SUBMITTALS as the "submittal reviewer:"

Environmental Designer (Project Engineer):
Environmental Designer (Project Manager):

Other key construction personnel will be identified at the Pre-Construction Meeting.

NOTICE TO CONTRACTOR - EARLY SUBMITTALS

The Contractor is hereby advised that the Department has identified the potential need to order certain materials and equipment, and thereby submit certain submittals for approval early in the construction process to ensure the Project is completed within the allowable Contract Time. Submittals shall be in accordance with Form 817 Article 1.20-1.05.02. The following items have been identified as possibly requiring early ordering thereby requiring early submission of shop drawings and product data, including color selection charts and samples:

Oil-Water Separator
Aboveground Storage Tanks
Exterior Lighting Fixtures

The following items have been identified as possibly requiring early submission for purposes of project coordination and project work scheduling:

Baseline Critical Path Schedule
Contractor's Submittal Schedule

The lists above are not intended to be all-inclusive and do not relieve the Contractor from coordinating the activities of its subcontractors and suppliers. The Contractor will not be permitted to perform any physical work on the Project without the approval of the required submittals. Failure to properly plan for long lead items within the Contract schedule will not be justification for additional construction time.

It is recommended that the Contractor identify early in the construction sequencing process the subcontractors and suppliers associated with long lead-time items and submit the appropriate shop drawings and supporting data, including color selection charts and samples, for review upon Notice to Proceed.

NOTICE TO CONTRACTOR - SOLE SOURCE PRODUCTS

For operational purposes, the Department has determined the need to sole source products specified in the following Contract provisions (including specific CSI-formatted Specifications contained within a particular Special Provision):

1. Automated Fuel Management System: Division 13 Section 132160, "Installation of New Fuel Facility."

No "Or Equals" will be permitted. Said products shall be installed only by their factory authorized installer or service representative. The Contractor shall bid the Project accordingly.

NOTICE TO CONTRACTOR - POTENTIAL FOR ASBESTOS CONTAINING MATERIALS

The Contractor shall submit manufacturer certification letters for all materials specified in the following Contract provisions (including CSI-formatted specifications contained within a particular special provision):

1. Division 07 Section 079200, “Joint Sealants.”
2. Division 23 Section 230719, “HVAC Piping Insulation.”
3. Division 26 Section 260519, “Low-Voltage Electrical Power Conductors and Cables.”
4. Division 26 Section 260544, “Sleeves and Sleeve Seals for Electrical Raceways and Cabling.”

The above list may not be all-inclusive and does not relieve the Contractor from its responsibility to provide manufacturer certification letters that are required under other Contract provisions. Furthermore, the Department may at any time require the Contractor to submit manufacturer certification letters proving that other materials do not contain asbestos.

NOTICE TO CONTRACTOR - PRE-INSTALLATION MEETINGS

The Engineer will conduct a pre-installation meeting at the Project Site before each of the following construction activities:

1. Concrete: CSI Division 3 Section 033000, “Cast-In-Place Concrete.”
2. Fuel Facility: CSI Division 13 Section 132160, “Installation of New Fuel Facility.”

The above list may not be all-inclusive and does not relieve the Contractor from its responsibility to provide pre-installation meetings that are required under other Contract provisions.

NOTICE TO CONTRACTOR - CLOSEOUT DOCUMENTS

General: The list of special provisions (including CSI-formatted specifications) in the Table below may not be all-inclusive and does not relieve the Contractor from its responsibility to provide spare parts, operation and maintenance manuals, training, and warranties that are required under other Contract provisions.

Spare Parts: The Contractor shall deliver spare parts on products listed in the Table below to the Project Site.

Operation and Maintenance Manuals: Submit 3 copies of each manual to the Designer. The Designer and the Owner (Mr. David A. Hartley, Office of Property and Facilities Services) will review the manuals for conformance to the Contract. The manuals will be processed in accordance with Form 817 Article 1.20-1.05.02, with 3 copies being forwarded to the Owner with a transmittal letter being sent to the Engineer.

Product Maintenance Manual: The Contractor shall provide complete information in the materials and finishes manual on products listed in the Table below.

Equipment and Systems Maintenance Manuals: The Contractor shall provide complete information in the equipment and systems manual on products listed in the Table below.

Training: The Contractor shall provide training on products listed in the Table below.

Warranties: Submit 3 copies of written warranties, including special warranties to the Designer. The Designer and the Owner will review the warranties for conformance to the Contract. The warranties will be processed in accordance with Form 817 Article 1.20-1.05.02, with 3 copies being forwarded to the Owner with a transmittal letter being sent to the Engineer.

The Contractor shall provide special warranties on products and installations listed in the Table.

TABLE

Special Provision (including CSI-formatted Specifications)	Warranties	Spare Parts	Training	Operation and Maintenance Manuals
CSI Section 132160, “Installation of New Fuel Facility”	X		X	X
CSI Section 132180, “Tank Monitoring System”			X	X
CSI Section 221325, “Oil-Water Separator”	X			X
CSI Section 230533, “Heat Tracing for HVAC Piping”				X
CSI Section 231113, “Facility Fuel-Oil Piping”	X			X
CSI Section 262416, “Panelboards”		X		X

Special Provision (including CSI-formatted Specifications)	Warranties	Spare Parts	Training	Operation and Maintenance Manuals
CSI Section 262813, “Fuses”		X		X
CSI Section 262816, “Enclosed Switches and Circuit Breakers”		X		X
CSI Section 265600, “Exterior Lighting”	X	X		X

NOTICE TO CONTRACTOR - UTILITY SERVICE CONNECTIONS AND RELOCATIONS

The electric and telephone services to the Project Site require service connections and/or relocations from/to the applicable utility company's facilities. Utility service connection, relocations and installations to the point of the utility service are included as shown and described within the Contract.

Unless otherwise noted, the Contractor is responsible for notifying each utility company a minimum of 4 weeks' notice prior to the need for the utility to perform any work, and for coordinating the service connection and/or relocation requirements with the utility company. The Contractor shall coordinate with the following utility companies:

Electric: EverSource
Telephone: Frontier

Where known, utility company representative names are identified within the Contract.

Item No. 1700001A – Service Connections (Estimated Cost) is included in the Contract to reimburse each utility for their work that is required to support Contract work. Refer to the CSI Specification Sections referenced below for additional information in this regard.

Electric: CSI Section 262713, "Electricity Metering."
Telephone: CSI Section 270000, "Premises Telephone Wiring."

NOTICE TO CONTRACTOR - CAD FILES

The Contractor is hereby advised that CAD files will not be provided to construction contract bidders, the Contractor, or any subcontractor. Contract documents, including plans, are provided in Portable Document Format (PDF).

The Department AEC Applications unit has prepared technical reference materials on extending the utility of PDF contract plan sheets. See the Repurposing PDF Contract Plan Sheets web page (http://www.ct.gov/dot/cwp/view.asp?a=2288&Q=567262&PM=1).

The Contractor shall bid the Project accordingly.

NOTICE TO CONTRACTOR - ENVIRONMENTAL INVESTIGATIONS

Subsurface Site Investigations were conducted at the Litchfield Maintenance Facility, which evaluated soil and groundwater quality within of the facility's Project limits. As noted in the 2008 Task 210 report, soil and groundwater within the Project Area was impacted by an historic release from the facility's former gasoline underground storage tank (UST).

As indicated in the Task 210 report and more-recent supplemental subsurface investigation, elevated concentrations of volatile organic compounds (VOCs) and extractable total petroleum hydrocarbons (ETPH) were detected in Site soil and groundwater above applicable Connecticut Remediation Standard Regulations (RSRs) criteria. Specifically, constituents of concern were detected in the soil at concentrations above the Residential Direct Exposure Criteria (RES DEC) and/or GA Pollutant Mobility Criteria (GA PMC), and in groundwater above the Ground Water Protection Criteria (GWPC) and/or Surface Water Protection Criteria (SWPC). Therefore, the Project Area has been identified as an Area of Environmental Concern (AOEC). The presence of constituents of concern at these concentrations will require material handling measures beyond those required for normal construction operations.

This project includes the removal of a 4,000-gallon gasoline UST, a 6,000-gallon diesel fuel UST, a 2,000-gallon fuel oil UST and a 1,000-gallon oil/water separator. Additionally, the Project includes the demolition of an abandoned groundwater treatment system and the remediation by excavation of the impacted soils identified during the investigations.

Due to the location of the impacted soil to be excavated, site demolition work, tank removals and soil remedial activities will need to be completed prior to installation work associated with the new motor fuel system.

Demolition of the Groundwater Treatment System

The locations of the groundwater treatment system and the groundwater monitoring well network are shown on Drawing ENV-002 of the Project Plans. The treatment system consists of a mobile trailer containing an assortment of electrical equipment, a water tank and a 200-pound activated carbon water treatment vessel. Exterior components include two (2) 600-pound activated carbon air-stripping vessels, system plumbing and electrical components. Demolition of the groundwater treatment system shall be completed as shown on the Project Drawings and in accordance with Item No. 0999002A, "Disposal of Buildings." The activated carbon contained in the vessels has been determined to be non-RCRA hazardous through waste characterization, and will require proper disposal at an approved treatment/recycling/disposal facility in accordance with Item No. 0101143A, "Handling and Disposal of Regulated Items."

Seventeen groundwater monitoring wells, along with the treatment system's air sparge and soil vapor extraction wells will need to be abandoned prior to the initiation of other Project-related intrusive activities. The subject wells are identified on ENV-002 of the Project Plans and shall

be abandoned in accordance with Item Nos. 0202640A, "2-Inch Groundwater Monitoring Well Abandonment" and 0202642A, "Abandonment Of Wells."

Soil Excavation and Management

The impacted soils will require remediation by excavation within the limits shown on Drawing ENV-003 of the Project Plans. Prior to initiation of intrusive activities, a temporary waste stockpile area (WSA) will need to be established at the location shown on Drawing ENV-004 of the Project Plans, and constructed in accordance with Item No. 0101128A "Securing, Construction and Dismantling of a Waste Stockpile and Treatment Area."

Contaminated soils designated as Controlled Materials for the Project are situated at the groundwater table interface. As a result, the clean overlying (surface grade to approximately 10 to 12 feet below grade, depending on seasonal fluctuations) will need to be removed and temporarily stored on-site. The Contractor shall then excavate approximately an additional two (2) feet of soil from the groundwater smear zone, as directed by the Engineer. Due to the highly porous characteristics of the surrounding soils, dewatering of the excavation to facilitate excavation will not be feasible due to the expected volume of water that would be generated. Therefore, the excavated soils will require draining back into the excavation before transporting to the Project WSA. The Controlled Material removed from the excavation shall be staged in the on-site WSA and shall be managed in accordance with Item 0101117A, "Controlled Material Handling." The Controlled Material will require disposal at an approved treatment/recycling/disposal facility in accordance with Item 0202315A, "Disposal of Controlled Materials."

Due to site physical constraints, depth of planned excavation, and soil conditions, the excavation work may need to be performed in stages. Additional excavation restrictions are noted on the Project Drawings.

Soil Amendment

Following completion of the soil excavation within the soil remediation area identified on Drawing ENV-003, and prior to backfilling, the Contractor shall apply an oxygen releasing reagent for *in-situ* remediation of remaining groundwater and soil contamination. Application of the oxygen releasing reagent shall be completed in accordance with Item No. 0101110A, "Soil Amendment" and the selected amendment's manufacturer's recommendations.

Backfilling

Excavated soils not designated as Controlled Materials <u>will not</u> require material handling measures beyond those required for normal construction operations. These soils shall be segregated from those specifically identified as Controlled Material by the Engineer as well as all subbase material excavated as a part of project construction, and shall be utilized as fill/backfill within the Project limits, in accordance with the following conditions:

1. Such soil is deemed to be structurally suitable for use as fill by the Engineer; and
2. Such soil is not placed in an area subject to erosion.

Excavated soils deemed suitable for reuse are to be used on-site before other soils and/or fill such that materials requiring off-site disposal are minimized. Any additional impacted soils identified by the Engineer during site work, will be considered Controlled Material. Soils considered to be Controlled Material, excluding the existing pavement structure (asphalt and subbase), rock, ledge, and concrete, will not be reusable as backfill unless authorized by the Engineer in writing, and shall be managed in accordance with Item 0101117A "Controlled Materials Handling." Provisions will be made should there be excess excavated material that cannot be reused within the Project limits.

Groundwater Management

The CTDEEP groundwater classification beneath the Litchfield Maintenance Facility is "GAA." As indicated above, groundwater beneath the Project area is impacted with elevated concentrations of VOCs and ETPH. In the event heavy visible petroleum sheens or free product are observed following the removal of the USTs or during excavation, the Contractor shall be prepared to perform limited dewatering/product removal (i.e., skimming) of the excavation as directed by the Engineer. Wastewater generated as a result of these dewatering efforts shall be managed and disposed of in accordance with Item 0101143A "Handling and Disposal of Regulated Items."

The Contractor is hereby notified that Controlled Materials requiring special management and/or disposal procedures will be encountered during various construction activities conducted within the Project limits at the site. Therefore, the Contractor will be required to implement appropriate health and safety measures for all construction activities to be performed within the areas of excavation. These measures shall include, but are not limited to, air monitoring, engineering controls, selection of personal protective equipment, decontamination of personnel and equipment decontamination, and personnel training. WORKER HEALTH AND SAFETY PROTOCOLS WHICH ADDRESS POTENTIAL AND/OR ACTUAL RISK OF EXPOSURE TO SITE SPECIFIC HAZARDS ARE SOLELY THE RESPONSIBILITY OF THE CONTRACTOR.

The Sections which shall be reviewed by the Contractor include the following:

- Item No. 0101000A – Environmental Health and Safety
- Item No. 0100072A – Removal and Disposal of Underground Tanks
- Item No. 0101117A – Controlled Materials Handling
- Item No. 0202315A – Disposal of Controlled Materials
- Item No. 0101143A - Handling and Disposal of Regulated Items
- Item No. 0101128A - Securing, Construction and Dismantling of a Waste Stockpile and Treatment Area

- Item No. 0202640A - 2-Inch Monitoring Well Abandonment
- Item No. 0202642A – Abandonment Of Wells
- Item No. 0999002A – Disposal of Buildings
- Item No. 0101110A – Soil Amendment

The Contractor is alerted to the fact that a Department environmental consultant will be on site periodically during construction operations to observe site conditions for the State.

Information pertaining to the results of the referenced environmental investigations can be found in the documents listed below. These documents shall be available for review in the Project portal in ProjectWise.

- Task 210 – Subsurface Site Investigation Report, Litchfield Maintenance Facility, Litchfield, Connecticut. Diversified Technology Consultants, Inc., December 2008
- Supplemental Subsurface Site Investigation Report, Litchfield Maintenance Facility, Litchfield, Connecticut. TRC, September 2016.

NOTICE TO CONTRACTOR - SECTION 4.06 AND M.04 MIX DESIGNATION EQUIVALENCY AND PG BINDER EQUIVALENCY

Sections 4.06 and M.04 have been replaced in their entirety with the Special Provisions included as part of this contract. These Special Provisions reflect changes in mix designations for various types of hot-mix asphalt (HMA) and include the removal of mixes designed and governed by the Marshall Mix Design method. The following table is to be used to associate mix designations noted on the plans with those in the contract specifications and related documents. Mix designations on each row are equivalent and refer to a single mix, which shall be subject to the requirements of the Section 4.06 and M.04 Special Provisions for the Official Mix Designation in the leftmost column of the corresponding row in the table.

Mix Designation Equivalency Table

Official Mix Designation	Equivalent Mix Designation (a)	Equivalent Mix Designation (b)
(c)	Superpave 1.5 inch	Superpave 37.5 mm
HMA S1	Superpave 1.0 inch	Superpave 25.0 mm
HMA S0.5	Superpave 0.5 inch	Superpave 12.5 mm
HMA S0.375	Superpave 0.375 inch	Superpave 9.5 mm
HMA S0.25	Superpave 0.25 inch	Superpave 6.25 mm
(c)	Superpave #4	Superpave #4
HMA S0.5 (d)	Bituminous Concrete Class 1 **(e)**	Bituminous Concrete Class 1 **(e)**
HMA S0.375 (d)	Bituminous Concrete Class 2 where it is specificed in lifts 1.25 or thicker **(e)**	Bituminous Concrete Class 2 where it is specificed in lifts 1.25 or thicker **(e)**
HMA S0.25 (d)	Bituminous Concrete Class 2 where it is specified in lifts 1.0 inches to less than 1.25 inches **(e)**; Bituminous Concrete Class 12 **(e)**	Bituminous Concrete Class 2 where it is specified in lifts 1.0 inches to less than 1.25 inches **(e)**; Bituminous Concrete Class 12 **(e)**
HMA S1 (d)	Bituminous Concrete Class 4 **(e)**	Bituminous Concrete Class 4 **(e)**
Curb Mix	Bituminous Concrete Class 3	Bituminous Concrete Class 3

Notes

(a) This mix designation is generally included with projects where the English measurement system is used. The mix designation may contain both the English measurement system

designation and the SI (metric) measurement system designation, one of which would be in parenthesis.

(b) This mix designation is generally included with projects where the SI (metric) measurement system is used. The mix designation may contain both the English measurement system designation and the SI measurement system designation, one of which would be in parenthesis.

(c) This mix is no longer in use except by contract-specific Special Provision; if this mix is called for in the Plans but no such Special Provision is included for this contract a suitable substitute must be approved by the Engineer.

(d) Unless approved by the Engineer, the Superpave Design Level for the Official Mix Designation bituminous concrete replacing a Marshall mix called for in the plans or other contract documents shall be Design Level 2 for mixes used on mainline or shoulders of state-maintained roadways and Design Level 1 elsewhere, including but not limited to driveways or sidewalks.

(e) All mixes designed under the Marshall mix-design method are no longer covered by the 4.06 Special Provision. Wherever they appear in Contract plans and documents they shall be substituted by the "Official Mix Designation" in the same row of the Mix Designation Equivalency Table. Unless approved by the Engineer, the Superpave Design Level shall be Level 1.

PG Binder Designation Equivalency Table

Official Binder Designation	Equivalent Binder Designation	Use
PG 64S-22	PG 64-22	Hot-Mix Asphalt (HMA S* pay items and pay items using HMA S* materials)**(a),(b)**
PG 64E-22	PG 76-22	Polymer-Modified Asphalt (PMA S* pay items and pay items using HMA S* materials)**(a),(b)**

Notes

(a) Use the Mix Designation Equivalency Table above to identify the Official Mix Designation for materials using the Marshall mix design method, i.e. "Bituminous Concrete Class *."

(b) Refer to the NTC – Superpave Design Level for the Superpave Design Level to use for each mix on a project. The PG Binder Designation Equivalency Table can be used to obtain the Official Binder Designation for each mix identified in the NTC – Superpave Design Level.

NOTICE TO CONTRACTOR - SUPERPAVE DESIGN LEVEL INFORMATION

Hot-Mix Asphalt (HMA) and Polymer-Modified Asphalt (PMA) constructed according to the Superpave mix-design system are required to attain a Superpave Design Level and are required to use a Performance Graded (PG) binder. The Superpave Design Levels required for this project are listed in Table 1. The required PG binder is indicated for each mix with an "X" in the appropriate box in Table 1.

TABLE 1 – Superpave Design Level and Performance Graded (PG) Binder

Mix Designation	**PG Binder**		_____ _____ _____ _____ ____	**Route** _____ _____ _____ _____	**Route** _____ _____ _____ _____	**Route** _____ _____ _____ _____	**Route** _____ _____ _____ _____
	PG 64S-22	**PG 64E-22**	**Design Level**	**Design Level**	**Design Level**	**Design Level**	**Design Level**
HMA S0.25	-	-	-	-	-	-	-
HMA S0.375	X	-	2	-	-	-	-
HMA S0.5	-	-	-	-	-	-	-
HMA S1	-	-	-	-	-	-	-
PMA S0.25	-	-	-	-	-	-	-
PMA S0.375	-	-	-	-	-	-	-
PMA S0.5	-	-	-	-	-	-	-
PMA S1	-	-	-	-	-	-	-

Note: Please note that PMA mix designations typically use PG 64E-22 and HMA mix designations use PG 64S-22

SECTION 1.20 - GENERAL CLAUSES FOR FACILITIES CONSTRUCTION

1.20-1.00 – Facilities Construction – General:

Delete the second sentence in the first paragraph and replace with the following:

"The Department has determined that this Project is Facilities Construction and therefore Section 1.20 applies."

1.20-1.02.04—Facilities Construction – Examination of Plans, Specifications, Special Provisions and Site of Work:

Replace the third sentence of the fourth paragraph with:

The Department cannot ensure a response to inquiries received later than ten (10) days prior to the original scheduled opening of the related bid.

1.20-1.02.13—Facilities Construction – Knowledge of Applicable Laws:

Under the State Building Code, replace #7 with the following:

"7. The 2009 ICC/ANSI A117.1."

Under the State Fire Prevention Code, replace #1 with the following:

"1. The 2012 NFPA 1."

1.20-1.03.01—Facilities Construction – Consideration of Bids:

Replace "14 calendar days" with "7 calendar days" in the first and second sentences.

1.20-1.05.02— Facilities Construction – Contractor Submittals:

Replace #1, #2, and #3.

1. General: If the plans prepared by the Department do not show complete details, they will show the necessary dimensions and preliminary details, which when used along with the other Contract documents, will enable the Contractor to prepare submittals necessary to complete the Contract work.

The Contractor is required to prepare submittals as Portable Document Format (PDF) files using Bluebeam Revu.

The Contractor is also required to acquire and maintain access to the Department's Bentley ProjectWise data management system portal. The minimum recommended internet speed is 25MB/sec. For reference, the Department's internet speed is 1 GB/sec.

The Contractor shall submit a "CT DOT ProjectWise – New User Form" to request user names and passwords. The Department will permit Web-based access and no more than 2 users for the Contractor.

The entry/log-in procedure is described in Section 3.2 of the CT DOT Digital Project Development Manual.

2. Submittal Preparation and Processing: The Contractor shall:

(a) Coordinate preparation and processing of submittals with performance of construction activities;

(b) Transmit each submittal sufficiently in advance of performance of related construction activities to avoid delay;

(c) Coordinate each submittal with fabrication, purchasing, testing, delivery, and other submittals and related activities that require sequential activity;

(d) Provide complete submittal packages as multi-page PDF's (Working Drawings, Shop Drawings, Product Data, Product Samples, and Quality Assurance Submittals, as applicable) for related elements of Project work for a concurrent review of all information. Incomplete submittal packages will be returned to the Contractor without being reviewed. Electronic PDF packages shall be limited to 75 MB unzipped; larger PDF packages will need to be broken up.

The Contractor shall allow at least 21 calendar days for initial submittal review by the submittal reviewer, and allow additional time for such review if processing must be delayed to permit coordination with subsequent submittals. If a subsequent submittal is necessary, the Contractor shall allow at least 21 additional calendar days for processing each subsequent submittal. The submittal reviewer reserves the right to withhold action on a submittal if coordination with other submittals is necessary, until all related submittals are received. The submittal reviewer will promptly inform the Contractor when a submittal being processed must be delayed for such coordination.

The Contractor shall allow at least 28 calendar days for outside agency review of any submittal requiring their approval, including but not limited to the following: any utility, FTA, any railroad, DEEP, U.S. Coast Guard, Army Corps of Engineers, FM Global, and any Commissioning Authority.

The Engineer will not authorize an extension of Contract time because of the Contractor's failure to transmit submittals to the submittal reviewer or outside agencies sufficiently in advance of the work to permit processing.

The Contractor shall be limited to one acceptable submittal per product. Once a product has been accepted either as originally specified, or as an "Or Equal" to the product specified, the Contractor may elect to submit a subsequent product for consideration, but the Contractor shall be required to reimburse the Department for all costs associated with reviewing the subsequent request.

The Contractor shall attach a Submittal Transmittal Form to the beginning of each PDF submittal package. A blank Submittal Transmittal Form is located in ProjectWise "01.0 – Projects-Active" under the subfolder "120_Contractor_Submittals (PDF)" under the project number main folder. This form will be used for the Contractor to digitally certify that "Having reviewed this submittal, I certify that it is complete, accurate, coordinated in all aspects of the item being submitted and conforms to the requirements of the Contract in all respects, including all Federal requirements such as "Buy America", except as otherwise noted." The digital certification process is detailed in Section 2 of the CT DOT Digital Project Development Manual.

3. Transmittal of Submittals: The digitally certified PDF submittal package shall be uploaded into ProjectWise "01.0 – Projects-Active" under the subfolder "120_Contractor_Submittals (PDF)" under the project number main folder. The upload process is detailed in Section 3.2.1-3 of the CT DOT Digital Project Development Manual. The submittal reviewer will not act on submittals received in any other manner.

The Contractor shall attribute the submittal packages in ProjectWise using the following the following attributes and naming conventions:

a) Discipline: CTR
b) Main Category: CONTRACTOR
c) Sub Category: SUBMITTAL
d) Label: "XXX-Spec Reference-##"

1. "XXX" is the chronological submittal number created by the Contractor starting at 001.
2. "Spec Reference" is the 7-digit Contract Item No. (no "A" shall be included) for individual Contract items or is the 6-digit CSI Section number preceded by a "C" (making it a total of 7 digits) for the MLSI.
3. "##" is the submission attempt (01, 02, 03, etc.) of the submittal.

e) Description: Brief description of submittal content labeled "Submittal – *submittal content*."

The first submission for a particular item is the "01" submittal. Subsequent resubmittals (02, 03, etc.) are transmitted as described above only for those submittals or portions thereof returned to the Contractor with a "Revise and Resubmit" or "Rejected" disposition. The chronological submittal number shall not be revised on a resubmittal.

After uploading an initial or subsequent submittal, the Contractor shall provide e-mail notification to submittal reviewers and other key personnel at their business e-mail address that the submittals have been uploaded and are available for review. The Contractor shall provide a web link to the PDF submittal within their e-mail notification. The Contractor shall include the following information in the notification e-mail subject line in this order: *Project Number - "XXX-Spec Reference-##" – "Description."* The submittal review time begins when the submittal reviewer is notified by e-mail.

1.20 - 1.07.10—Facilities Construction – Contractor's Duty to Indemnify the State against Claims for Injury or Damage:

Add the following after the only paragraph:

"It is further understood and agreed by the parties hereto, that the Contractor shall not use the defense of Sovereign Immunity in the adjustment of claims or in the defense of any suit, including any suit between the State and the Contractor, unless requested to do so by the State."

1.20-1.08.02—Facilities Construction – Establishment of Construction Field Office:

Delete the second paragraph.

1.20-1.08.04—Facilities Construction – Limitation of Operations:

Add following the last paragraph.

"The Contractor shall repair at its own expense any and all damage caused by construction operations to existing buildings unless said damage is scheduled as part of the Project work. The Contractor shall take all precautions necessary to protect the building and its occupants during the construction period.

Department personnel will occupy the Maintenance Facility, and the existing site weekdays between the hours of 6 a.m. and 4 p.m. as well as at all times during winter storms. The Contractor shall not interfere with the Department's employee's performance of their assigned work.

The Contractor shall notify the Engineer when access to the facilities is required. The Engineer shall make all necessary arrangements with the facility supervisor to gain access to the facility.

During all times that the Project Site is occupied by state personnel, the Contractor shall maintain the following systems to the extent described to permit Department operations:

1. Fuel Oil System and Heating System: From October 1 to April 1 of the following year, no work related to the fuel oil system and heating system shall be permitted. The Contractor shall remove the salvable product from the fuel oil underground storage tank and transport the said product to Department designated sites within 50 miles.

2. Bay Area Drainage and Oil-Water Separator: Before removal of any part of the existing oil-water separator, the Contractor shall:

    a. Empty the oil storage of the existing oil-water separator at its expense. Provide the Engineer 7 calendar days' notice before emptying the oil-water separator. During this time provide yellow caution tape along all floor drainage within the Facility.

b. Provide the Engineer 7 calendar days' notice of its intent to pressure wash the existing floor drain piping in the bays of the Facility out to the existing oil-water separator. Said pressure washing shall occur prior to the oil-water separator being removed.
c. Upon completion of all pressure wash activities in the bays, the Contractor is responsible for emptying the existing oil-water separator at its expense.

Once the new oil-water separator is installed, tested, and accepted by the Department, the new system will be made operational.

3. Tank Monitoring System: The existing tank monitoring system portion that monitors the existing oil-water separator shall be kept fully operational at all times. An outage of the existing tank monitoring system is only permitted under the following conditions:

   a. Notify Engineer no fewer than two days in advance of proposed interruption of the existing tank monitoring system.
   b. The maximum allowable interruption shall be a 6-hour period.
   c. Coordinate with Engineer and Department personnel that no vehicles are allowed in the facility bay areas.

4. Electric Service: Electric service shall be maintained to the facilities and sites weekdays between the hours of 6 a.m. and 4 p.m. from October 1 to March 31 as well as at all times during winter storms, unless otherwise approved by the Engineer. Electric service will be allowed to be shut down weekdays between the hours of 6 a.m. and 4 p.m. from April 1 to September 30 at the discretion of the Engineer for up to four (4) hours on the days and during the times approved by the Engineer and facility supervisor."

1.20-1.09.00—Facilities Construction – Unit Price Items, Lump Sum Items, Major Lump Sum Items:

"Facilities Construction projects are bid with both lump sum and unit price items which are in addition to the Major Lump Sum Item (MLSI) of the Project. These separate items will be measured for payment on a unit price or lump sum basis (whichever is applicable) for which a separate bid price is required, at the quantities indicated in the Bid Proposal Form. Each item to be measured is more specifically described in a corresponding Standard Specification or a special provision.

Standard Items are referenced by their item numbers; refer to the applicable article for the requirements for this item. Special provisions are referenced by their item number followed by an "A" suffix; refer to the special provisions for requirements for this item.

All work depicted on the Contract Plans and described in the Contract Specifications, including mobilization and project closeout, is included in the MLSI of the Project, with the exception of the unit price or other lump sum items listed in the Bid Proposal Form. Any work incidental to

an item which is not specifically described or included in the item, but which is required for performance and completion of the work required under the Contract, is included in the MLSI."

SECTION 4.06 - BITUMINOUS CONCRETE

Section 4.06 is being deleted in its entirety and replaced with the following:

4.06.01—Description
4.06.02—Materials
4.06.03—Construction Methods
4.06.04—Method of Measurement
4.06.05—Basis of Payment

4.06.01—Description: Work under this section shall include the production, delivery, placement, and compaction of an uniform textured, non-segregated, smooth bituminous concrete pavement to the grade and cross section shown on the plans.

The terms listed below as used in this specification are defined as:

Bituminous Concrete: A composite material consisting of prescribed amounts of asphalt binder, and aggregates. Asphalt binder may also contain additives engineered to modify specific properties and/or behavior of the composite material. References to bituminous concrete apply to all of its forms, such as those identified as hot-mix asphalt (HMA),or polymer-modified asphalt (PMA).

Bituminous Concrete Plant (Plant): A structure where aggregates and asphalt binder are combined in a controlled fashion into a bituminous concrete mixture suitable for forming pavements and other paved surfaces.

Course: A continuous layer (a lift or multiple lifts) of the same bituminous concrete mixture placed as part of the pavement structure.

Density Lot: The total tonnage of all bituminous concrete placed in a single lift and as defined in Article 4.06.03.

Disintegration: Erosion or fragmentation of the pavement surface which can be described as polishing, weathering-oxidizing, scaling, spalling, raveling, or formation of potholes.

Dispute Resolution: A procedure used to resolve conflicts between the Engineer and the Contractor's test results that may affect payment.

Hot Mix Asphalt (HMA): A bituminous concrete mixture typically produced at 325°F.

Job Mix Formula (JMF): A recommended aggregate gradation and asphalt binder content to achieve the required mixture properties.

Lift: An application of a bituminous concrete mixture placed and compacted to a specified thickness in a single paver pass.

Percent Within Limits (PWL): The percentage of the lot falling between the Upper Specification Limit (USL) and the Lower Specification Limit (LSL).

Polymer-Modified Asphalt (PMA): A bituminous concrete mixture containing a polymer modified asphalt binder and using a qualified warm mix technology.

Production Lot: The total tonnage of a bituminous concrete mixture from a single source that may receive an adjustment.

Production Sub Lot: Portion of the production lot typically represented by a single sample.

Quality Assurance (QA): All those planned and systematic actions necessary to provide ConnDOT the confidence that a Contractor will perform the work as specified in the Contract.

Quality Control (QC): The sum total of activities performed by the vendor (Producer, Manufacturer, and Contractor) to ensure that a product meets contract specification requirements.

Superpave: A bituminous concrete mix design used in mixtures designated as "S*" Where "S" indicates Superpave and * indicates the sieve related to the nominal maximum aggregate size of the mix.

Segregation: A non-uniform distribution of a bituminous concrete mixture in terms of gradation, temperature, or volumetric properties.

Warm Mix Asphalt (WMA) Technology: A qualified additive or technology that may be used to produce a bituminous concrete at reduced temperatures and/or increase workability of the mixture.

4.06.02—Materials: All materials shall conform to the requirements of Section M.04.

1. Materials Supply: The bituminous concrete mixture must be from one source of supply and originate from one Plant unless authorized by the Engineer.

2. Recycled Materials: Reclaimed Asphalt Pavement (RAP), Crushed Recycled Container Glass (CRCG), Recycled Asphalt Shingles (RAS), or crumb rubber (CR) from recycled tires may be incorporated in bituminous concrete mixtures in accordance with Project Specifications.

4.06.03—Construction Methods:

1. Material Documentation: All vendors producing bituminous concrete must have Plants with automated vehicle-weighing scales, storage scales, and material feeds capable of producing a delivery ticket containing the information below.

a. "State of Connecticut" printed on ticket.
b. Name of producer, identification of Plant, and specific storage silo if used.
c. Date and time.
d. Mixture Designation; Mix type and level Curb mixtures for machine-placed curbing must state "curb mix only".
e. If WMA Technology is used, the additive name and dosage rate or water injection rate must be listed.
f. Net weight of mixture loaded into the vehicle (When RAP and/or RAS is used the moisture content shall be excluded from mixture net weight).
g. Gross weight (equal to the net weight plus the tare weight or the loaded scale weight).
h. Tare weight of vehicle (Daily scale weight of the empty vehicle).
i. Project number, purchase order number, name of Contractor (if Contractor other than Producer).
j. Vehicle number - unique means of identification vehicle.
k. For Batch Plants, individual aggregate, recycled materials, and virgin asphalt max/target/min weights when silos are not used.
l. For every mixture designation the running daily total delivered and sequential load number.

The net weight of mixture loaded into the vehicle must be equal to the cumulative measured weights of its components.

The Contractor must notify the Engineer immediately if, during production, there is a malfunction of the weight recording system in the automated Plant. Manually written tickets containing all required information will be allowed for no more than one hour.

The State reserves the right to have an inspector present to monitor batching and /or weighing operations.

2. Transportation of Mixture: The mixture shall be transported in vehicles that are clean of all foreign material, excessive coating or cleaning agents, and, that have no gaps through which mixture might spill. Any material spilled during the loading or transportation process shall be quantified by re-weighing the vehicle. The Contractor shall load vehicles uniformly so that segregation is minimized. Loaded vehicles shall be tightly covered with waterproof covers acceptable to the Engineer. Mesh covers are prohibited. The cover must minimize air infiltration. Vehicles found not to be in conformance shall not be loaded.

Vehicles with loads of bituminous concrete being delivered to State projects must not exceed the statutory or permitted load limits referred to as gross vehicle weight (GVW). The Contractor shall furnish a list and allowable weights of all vehicles transporting mixture.
The State reserves the right to check the gross and tare weight of any vehicle. If the gross or tare weight varies from that shown on the delivery ticket by more than 0.4 percent, the Engineer will recalculate the net weight. The Contractor shall correct the discrepancy to the satisfaction of the Engineer.

If a vehicle delivers mixture to the project and the delivery ticket indicates that the vehicle is overweight, the load may not be rejected but a "Measured Weight Adjustment" will be taken in accordance with Article 4.06.04.

Vehicle body coating and cleaning agents must not have a deleterious effect on the mixture. The use of solvents or fuel oil, in any concentration, is prohibited for the coating of vehicle bodies.

For each delivery, the Engineer shall be provided a clear, legible copy of the delivery ticket.

3. Paving Equipment: The Contractor shall have the necessary paving and compaction equipment at the project site to perform the work. All equipment shall be in good working order and any equipment that is worn, defective or inadequate for performance of the work shall be repaired or replaced by the Contractor to the satisfaction of the Engineer. During the paving operation, the use of solvents or fuel oil, in any concentration, is prohibited as a release agent or cleaner on any paving equipment (i.e., rollers, pavers, transfer devices, etc.).

Refueling or cleaning of equipment is prohibited in any location on the project where fuel or solvents might come in contact with paved areas or areas to be paved. Solvents used in cleaning mechanical equipment or hand tools shall be stored off of areas paved or to be paved.

Pavers: Each paver shall have a receiving hopper with sufficient capacity to provide for a uniform spreading operation and a distribution system that places the mix uniformly, without segregation. The paver shall be equipped with and use a vibratory screed system with heaters or burners. The screed system shall be capable of producing a finished surface of the required evenness and texture without tearing, shoving, or gouging the mixture. Pavers with extendible screed units as part of the system shall have auger extensions and tunnel extenders as necessary. Automatic screed controls for grade and slope shall be used at all times unless otherwise authorized by the Engineer. The controls shall automatically adjust the screed to compensate for irregularities in the preceding course or existing base. The controls shall maintain the proper transverse slope and be readily adjustable, and shall operate from a fixed or moving reference such as a grade wire or floating beam.

Rollers: All rollers shall be self-propelled and designed for compaction of bituminous concrete. Rollers types shall include steel-wheeled, pneumatic or a combination thereof. Rollers that operate in a dynamic mode shall have drums that use a vibratory or oscillatory system or combination of. Vibratory rollers shall be equipped with indicators for amplitude, frequency and speed settings/readouts to measure the impacts per foot during the compaction process. Oscillatory rollers shall be equipped with frequency indicators. Rollers can operate in the dynamic mode using the oscillatory system on concrete structures such as bridges and catch basins if at the lowest frequency setting.

Pneumatic tire rollers shall be equipped with wide-tread compaction tires capable of exerting an average contact pressure from 60 to 90 pounds per square inch uniformly over the surface, The Contractor shall furnish documentation to the Engineer regarding tire size; pressure and loading

to confirm that the proper contact pressure is being developed and that the loading and contact pressure is uniform for all wheels.

Lighting: For paving operations, which will be performed during hours of darkness, the paving equipment shall be equipped with lighting fixtures as described below, or with an approved equal. Lighting shall minimize glare to passing traffic. The lighting options and minimum number of fixtures are listed in Tables 4.06-1 and 4.06-2:

TABLE 4.06-1: Minimum Paver Lighting

Option	Fixture Configuration	Fixture Quantity	Requirement
1	Type A	3	Mount over screed area
	Type B (narrow) or Type C (spot)	2	Aim to auger and guideline
	Type B (wide) or Type C (flood)	2	Aim 25 feet behind paving machine
2	Type D Balloon	2	Mount over screed area

TABLE 4.06-2: Minimum Roller Lighting

Option	Fixture Configuration*	Fixture Quantity	Requirement
1	Type B (wide)	2	Aim 50 feet in front of and behind roller
	Type B (narrow)	2	Aim 100 feet in front of and behind roller
2	Type C (flood)	2	Aim 50 feet in front of and behind roller
	Type C (spot)	2	Aim 100 feet in front of and behind roller
3	Type D Balloon	1	Mount above the roller

*All fixtures shall be mounted above the roller.

Type A: Fluorescent fixture shall be heavy-duty industrial type. Each fixture shall have a minimum output of 8,000 lumens. The fixtures shall be mounted horizontally, and be designed for continuous row installation.

Type B: Each floodlight fixture shall have a minimum output of 18,000 lumens.

Type C: Each fixture shall have a minimum output of 19,000 lumens.

Type D: Balloon light: Each balloon light fixture shall have a minimum output of 50,000 lumens, and emit light equally in all directions.

Material Transfer Vehicle (MTV): A MTV shall be used when placing a bituminous concrete surface course as indicated in the contract documents.

The MTV must be a vehicle specifically designed for the purpose of delivering the bituminous concrete mixture from the delivery vehicle to the paver. The MTV must continuously remix the bituminous concrete mixture throughout the placement process.

The use of a MTV will be subject to the requirements stated in Article 1.07.05- Load Restrictions. The Engineer may limit the use of the vehicle if it is determined that the use of the MTV may damage highway components, utilities, or bridges. The Contractor shall submit to the Engineer at time of pre-construction the following information:

- The make and model of the MTV.
- The individual axle weights and axle spacing for each piece of paving equipment (haul vehicle, MTV and paver).
- A working drawing showing the axle spacing in combination with all pieces of equipment that will comprise the paving echelon.

4. Test Section: The Engineer may require the Contractor to place a test section whenever the requirements of this specification or Section M.04 are not met.

The Contractor shall submit the quantity of mixture to be placed and the location of the test section for review and approval by the Engineer. The same equipment used in the construction of a passing test section shall be used throughout production.

If a test section fails to meet specifications, the Contractor shall stop production, make necessary adjustments to the job mix formula, Plant operations, or procedures for placement and compaction. The Contractor shall construct test sections, as allowed by the Engineer, until all the required specifications are met. All test sections shall also be subject to removal as set forth in Article 1.06.04.

5. Transitions for Roadway Surface: Transitions shall be formed at any point on the roadway where the pavement surface deviates, vertically, from the uniform longitudinal profile as specified on the plans. Whether formed by milling or by bituminous concrete mixture, all transition lengths shall conform to the criteria below unless otherwise specified.

<u>Permanent Transitions</u>: Defined as any gradual change in pavement elevation that remains as a permanent part of the work.

A transition shall be constructed no closer than 75 feet from either side of a bridge expansion joint or parapet. All permanent transitions, leading and trailing, shall meet the following length requirements:

a) Posted speed limit is greater than 35 MPH: 30 feet per inch of elevation change.
b) Posted speed limit is 35 MPH or less: 15 feet per inch of elevation change.

In areas where it is impractical to use the above described permanent transition lengths the use of a shorter permanent transition length may be permitted when approved by the Engineer.

Temporary Transitions: A temporary transition is defined as a transition that does not remain a permanent part of the work. All temporary transitions shall meet the following length requirements:

a) Posted speed limit is greater than 50 MPH
   (1) Leading Transitions = 15 feet per inch of vertical change (thickness)
   (2) Trailing Transitions = 6 feet per inch of vertical change (thickness)

b) Posted speed limit is 40, 45, or 50 MPH
   (1) Leading and Trailing = 4 feet per inch of vertical change (thickness)

c) Posted speed limit is 35 MPH or less
   (1) Leading and Trailing = 3 feet per inch of vertical change (thickness)

Note: Any temporary transition to be in-place over the winter shutdown period or during extended periods of inactivity (more than 14 calendar days) shall conform to the greater than 50 MPH requirements shown above.

6. Spreading and Finishing of Mixture: Prior to the placement of the mixture, the underlying base course shall be brought to the plan grade and cross section within the allowable tolerance.

Immediately before placing a bituminous concrete lift, a uniform coating of tack coat shall be applied to all existing underlying pavement surfaces and on the exposed surface of a wedge joint. Such surfaces shall be clean and dry. Sweeping or other means acceptable to the Engineer shall be used.

The mixture shall not be placed whenever the surface is wet or frozen.

The Engineer may verify the mixture temperature by means of a probe or infrared type of thermometer. The Engineer may reject the load based on readings from a probe type thermometer and the specify temperature in the quality control plan (QCP) for placement.

Tack Coat Application: The tack coat shall be applied by a pressurized spray system that results in uniform overlapping coverage at an application rate of 0.03 to 0.05 gallons per square yard for a non-milled surface and an application rate of 0.05 to 0.07 gallons per square yard for a milled surface. For areas where both milled and un-milled surfaces occur, the tack coat shall be an application rate of 0.03 to 0.05 gallons per square yard. The Engineer must approve the equipment and the method of measurement prior to use. The material for tack coat shall not be heated in excess of 160°F and shall not be further diluted.

Tack coat shall be allowed sufficient time to break prior to any paving equipment or haul vehicles driving on it.

The Contractor may request to omit the tack coat application between bituminous concrete layers that have not been exposed to traffic and are placed during the same work shift. Requests to omit tack coat application on the exposed surface of a wedge joint will not be considered.

Placement: The mixture shall be placed and compacted to provide a smooth, dense surface with a uniform texture and no segregation at the specified thickness and dimensions indicated in the plans and specifications.

When unforeseen weather conditions prevent further placement of the mixture, the Engineer is not obligated to accept or place the bituminous concrete mixture that is in transit from the Plant.

In advance of paving, traffic control requirements shall be set up, maintained throughout placement, and shall not be removed until all associated work including density testing is completed.

The Contractor shall inspect the newly placed pavement for defects in the mixture or placement before rolling is started. Any deviation from standard crown or section shall be immediately remedied by placing additional mixture or removing surplus mixture. Such defects shall be corrected to the satisfaction of the Engineer.

Where it is impractical due to physical limitations to operate the paving equipment, the Engineer may permit the use of other methods or equipment. Where hand spreading is permitted, the mixture shall be placed by means of suitable shovels and other tools, and in a uniformly loose layer at a thickness that will result in a completed pavement meeting the designed grade and elevation.

Placement Tolerances: Each lift of bituminous concrete placed at a specified thickness shall meet the following requirements for thickness and area. Any pavement exceeding these limits shall be subject to an adjustment or removal. Lift tolerances will not relieve the Contractor from meeting the final designed grade. Lifts of specified non-uniform thickness, i.e. wedge or shim course, shall not be subject to thickness and area adjustments.

a) Thickness- Where the average thickness of the lift exceeds that shown on the plans beyond the tolerances shown in Table 4.06-3, the Engineer will calculate the thickness adjustment in accordance with Article 4.06.04.

TABLE 4.06-3: Thickness Tolerances

Mixture Designation	Lift Tolerance
S1	+/- ⅜ inch
S0.25, S0.375, S0.5	+/- ¼ inch

Where the thickness of the lift of mixture is less than that shown on the plans beyond the tolerances shown in Table 4.06-3, the Contractor, with the approval of the Engineer, shall take corrective action in accordance with this specification.

b) Area- Where the width of the lift exceeds that shown on the plans by more than the specified thickness, the Engineer will calculate the area adjustment in accordance with Article 4.06.04.

c) Delivered Weight of Mixture - When the delivery ticket shows that the vehicle exceeds the allowable gross weight for the vehicle type, the Engineer will calculate the weight adjustment in accordance with Article 4.06.04.

Transverse Joints: All transverse joints shall be formed by saw-cutting to expose the full thickness of the lift. Tack coat shall be applied to the sawn face immediately prior to additional mixture being placed.

Compaction: The Contractor shall compact the mixture to meet the density requirements as stated in Article 4.06.03 and eliminate all roller marks without displacement, shoving, cracking, or aggregate breakage.

When placing a lift with a specified thickness less than one and one-half (1 ½) inches, or a wedge course, the Contractor shall provide a minimum rolling pattern as determined by the development of a compaction curve. The procedure to be used shall be documented in the Contractor's QCP for placement and demonstrated on the first day of placement.

The use of the vibratory system on concrete structures is prohibited. When approved by the Engineer, the Contractor may operate a roller using an oscillatory system at the lowest frequency setting.

If the Engineer determines that the use of compaction equipment in the dynamic mode may damage highway components, utilities, or adjacent property, the Contractor shall provide alternate compaction equipment. The Engineer may allow the Contractor to operate rollers in the dynamic mode using the oscillatory system at the lowest frequency setting.

Rollers operating in the dynamic mode shall be shut off when changing directions.

These allowances will not relieve the Contractor from meeting pavement compaction requirements.

Surface Requirements:
Each lift of the surface course shall not vary more than ¼ inch from a Contractor-supplied 10 foot straightedge. For all other lifts, the tolerance shall be ⅜ inch. Such tolerance will apply to all paved areas.

Any surface that exhibits these characteristics or exceeds these tolerances shall be corrected by the Contractor at its own expense.

7. Longitudinal Joint Construction Methods: The Contractor shall use Method I- Notched Wedge Joint (see Figure 4.06-1) when constructing longitudinal joints where lift thicknesses are between 1½ and 3 inches. S1.0 mixtures shall be excluded from using Method I. Method II Butt Joint (see Figure 4.06-2) shall be used for lifts less than 1½ inches or greater than or equal to 3 inches. During placement of multiple lifts, the longitudinal joint shall be constructed in such a

manner that it is located at least 6 inches from the joint in the lift immediately below. The joint in the final lift shall be at the centerline or at lane lines. Each longitudinal joint shall maintain a consistent offset from the centerline of the roadway along its entire length. The difference in elevation between the two faces of any completed longitudinal joint shall not exceed ¼ inch in any location.

Method I - Notched Wedge Joint:

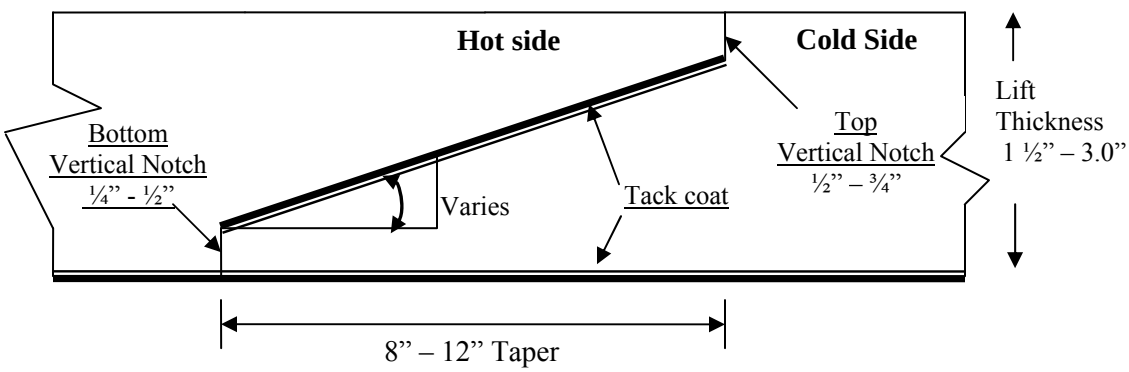

FIGURE 4.06-1: Notched Wedge Joint

A notched wedge joint shall be constructed as shown in Figure 4.06-1 using a device that is attached to the paver screed and is capable of independently adjusting the top and bottom vertical notches. The device shall have an integrated vibratory system.

The taper portion of the wedge joint must be placed over the longitudinal joint in the lift immediately below. The top vertical notch must be located at the centerline or lane line in the final lift. The requirement for paving full width "curb to curb" as described in Method II may be waived if addressed in the QC plan and approved by the Engineer.

The taper portion of the wedge joint shall be evenly compacted using equipment other than the paver or notch wedge joint device.

The taper portion of the wedge joint shall not be exposed to traffic for more than 5 calendar days.

Any exposed wedge joint must be located to allow for the free draining of water from the road surface.

The Engineer reserves the right to define the paving limits when using a wedge joint that will be exposed to traffic.

If Method I, Notched Wedge Joint cannot be used on lifts between 1.5 and 3 inches, Method III Butt Joint may be substituted according to the requirements below for "Method III – Butt Joint with Hot Pour Rubberized Asphalt Treatment."

Method II - Butt Joint:

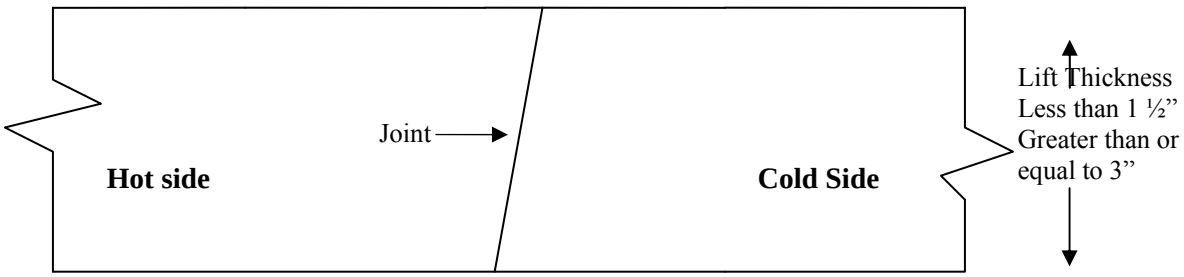

FIGURE 4.06-2: Butt Joint

When adjoining passes are placed, the Contractor shall utilize equipment that creates a near vertical edge (refer to Figure 4.06-2). The completing pass (hot side) shall have sufficient mixture so that the compacted thickness is not less than the previous pass (cold side). The end gate on the paver should be set so there is an overlap onto the cold side of the joint.

The Contractor shall not allow any butt joint to be incomplete at the end of a work shift unless otherwise allowed by the Engineer. When using this method, the Contractor is not allowed to leave a vertical edge exposed at the end of a work shift and must complete paving of the roadway full width "curb to curb."

Method III- Butt Joint with Hot Poured Rubberized Asphalt Treatment: If Method I Wedge Joint cannot be used due to physical constraints in certain limited locations; the contractor may submit a request in writing for approval by the Engineer, to utilize Method III Butt Joint as a substitution in those locations. There shall be no additional measurement or payment made when the Method III Butt Joint is substituted for the Method I Notched Wedge Joint. When required by the contract or approved by the Engineer, Method III (see Figure 4.06-3) shall be used.

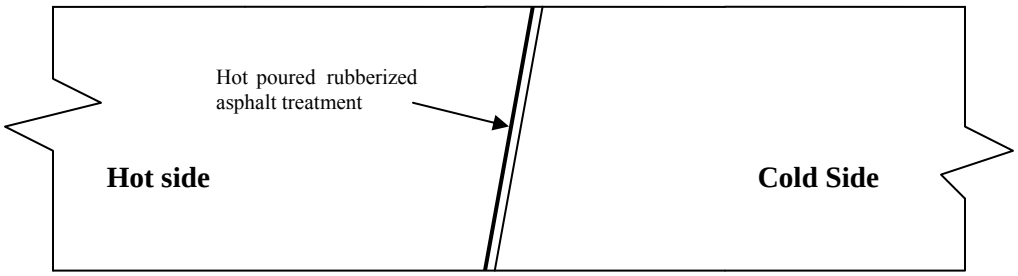

FIGURE 4.06-3: Butt Joint with Hot Poured Rubberized Asphalt Treatment

All of the requirements of Method II must be met with Method III. In addition, the longitudinal vertical edge must be treated with a rubberized joint seal material meeting the requirements of ASTM D 6690, Type 2. The joint sealant shall be placed on the face of the "cold side" of the butt joint as shown above prior to placing the "hot side" of the butt joint. The joint seal material shall be applied in accordance with the manufacturer's recommendation so as to provide a uniform coverage and avoid excess bleeding onto the newly placed pavement.

8. Contractor Quality Control (QC) Requirements: The Contractor shall be responsible for maintaining adequate quality control procedures throughout the production and placement operations. Therefore, the Contractor must ensure that the materials, mixture and work provided by Subcontractors, Suppliers and Producers also meet contract specification requirements.

This effort must be documented in Quality Control Plans and address the actions, inspection, or sampling and testing necessary to keep the production and placement operations in control, to determine when an operation has gone out of control and to respond to correct the situation in a timely fashion.

The Standard QCP for production shall consist of the quality control program specific to the production facility.

There are three components to the QCP for placement: a Standard QCP, a Project Summary Sheet that details project specific information, and if applicable a separate Extended Season Paving Plan as required in Section 9 "Temperature and Seasonal Requirements".

The Standard QCP for both production and placement shall be submitted to the Department for approval each calendar year and.at a minimum of 30 days prior to production or placement.

Production or placement shall not occur until all QCP components have been approved by the Engineer.

Each QCP shall include the name and qualifications of a Quality Control Manager (QCM). The QCM shall be responsible for the administration of the QCP, and any modifications that may become necessary. The QCM shall have the ability to direct all Contractor personnel on the project during paving operations. All Contractor sampling, inspection and test reports shall be reviewed and signed by the QCM prior to submittal to the Engineer. The QCPs shall also include the name and qualifications of any outside testing laboratory performing any QC functions on behalf of the Contractor.

Approval of the QCP does not relieve the Contractor of its responsibility to comply with the project specifications. The Contractor may modify the QCPs as work progresses and must document the changes in writing prior to resuming operations. These changes include but are not limited to changes in quality control procedures or personnel. The Department reserves the right to deny significant changes to the QCPs.

QCP for Production: Refer to Section M.04.03-1.

QCP for Placement: The Standard QCP, Project Summary Sheet, and Extended Season Paving Plan shall conform to the format provided by the Engineer. The format is available at http://www.ct.gov/dot/lib/dot/documents/dconstruction/pat/qcp_outline_hma_placement.pdf.

The Contractor shall perform all quality control sampling and testing, provide inspection, and exercise management control to ensure that placement conforms to the requirements as outlined in its QCP during all phases of the work. The Contractor shall document these activities for each day of placement.

The Contractor shall submit complete field density testing and inspection records to the Engineer within 48 hours in a manner acceptable to the Engineer.

The Contractor may obtain one (1) mat core and one (1) joint core per day for process control, provided this process is detailed in the QCP. The results of these process control cores shall not be used to dispute the Department determinations from the acceptance cores. The Contractor shall submit the location of each process control core to the Engineer for approval prior to taking the core. The core holes shall be filled to the same requirements described in sub-article 4.06.03-10.

9. Temperature and Seasonal Requirements: Paving, including placement of temporary pavements, shall be divided into two seasons, "In-Season" and "Extended-Season". In-Season paving occurs from May 1 – October 14, and Extended Season paving occurs from October 15-April 30. The following requirements shall apply unless otherwise authorized or directed by the Engineer:

- Mixtures shall not be placed when the air or sub base temperature is less than 40°F regardless of the season.
- Should paving operations be scheduled during the Extended Season, the Contractor must submit an Extended Season Paving Plan for the project that addresses minimum delivered mix temperature considering WMA, PMA or other additives, maximum paver speed, enhanced rolling patterns and the method to balance mixture delivery and placement operations. Paving during Extended Season shall not commence until the Engineer has approved the plan.

10. Obtaining Bituminous Concrete Cores: This Section describes the methodology and sampling frequency the Contractor shall use to obtain pavement cores.

Coring shall be performed on each lift specified to a thickness of one and one-half (1 ½) inches or more within 5 days of placement. The Contractor shall extract cores (4 or 6 inch diameter for S0.25, S0.375 and S0.5 mixtures 6 inch diameter for S1.0 mixtures) from locations determined

by the Engineer. The Engineer must witness the extraction, labeling of cores and filling of the core holes.

A density lot will be complete when the full designed paving width and length of the lot has been placed and shall include all longitudinal joints between the curb lines. HMA S1 mixes are excluded from the longitudinal joint density requirements.

A standard density lot is the quantity of material placed within the defined area exclusive of any structures. A combo density lot is the quantity of material placed within the defined area inclusive of structures less than or equal to 500 feet long. A bridge density lot is the quantity of material placed on a structure larger than 500 feet in length.

Prior to paving, the type and number of lot (s) shall be determined by the Engineer. The number of cores per lot shall be determined in accordance to Tables 4.06-4, 4.06-5A and 4.06-5B. Noncontiguous areas such as highway ramps may be combined to create one lot. Combined areas should be set up to target a 2000 ton lot size. The longitudinal locations of mat cores within a lot containing multiple paving passes will be determined using the total distance covered by the paver. The locations of the joint cores will be determined using the total length of longitudinal joints within the lot.

Sampling is in accordance with the following tables:

TABLE 4.06-4: Bridge Density Lot(s)

Length of Each Structure (Feet)	No. of Mat Cores	No. of Joint Cores
≤ 500’	See Table 4.06-5(A or B)	See Table 4.06-5(A or B)
501’ – 1500’	3	3
1501’ – 2500’	4	4
2501’ and greater	5	5

All material placed on structures less than or equal to 500 feet in length shall be included as part of a standard lot as follows:

TABLE 4.06-5A: Standard and Combo Density Lot(s) ≥ 500 Tons

Lot Type	No. of Mat Cores		No. of Joint Cores		Target Lot Size (Tons)
Standard Lot / Without Bridge (s)	4		4		2000
Combo Lot / Lot With Bridge(s)[1]	4 plus	1 per structure (≤ 300’)	4 plus	1 per structure (≤ 300’)	2000
		2 per structure (301’ – 500’)		2 per structure (301’ – 500’)	

TABLE 4.06-5B: Standard and Combo Density Lot < 500 Tons

Lot Type	No. of Mat Cores		No. of Joint Cores	
Standard Lot / Without Bridge (s)	3		3	
Combo Lot / Lot With Bridge(s)[1]	2 plus	1 per structure	2 plus	1 per structure

Note:
[1] If a combo lot mat or joint core location randomly falls on a structure, the core is to be obtained on the structure in addition to the core(s) required on the structure.

After the lift has been compacted and cooled, the Contractor shall cut cores to a depth equal to or greater than the lift thickness and remove them without damaging the lift(s) to be tested. Any core that is damaged or obviously defective while being obtained will be replaced with a new core from a location within 2 feet measured in a longitudinal direction.

A mat core shall not be located any closer than one foot from the edge of a paver pass. If a random number locates a core less than one foot from any edge, the location will be adjusted by the Engineer so that the outer edge of the core is one foot from the edge of the paver pass.

Method I, Notched Wedge Joint cores shall be taken so that the center of the core is 5 inches from the visible joint on the hot mat side (Figure 4.06-5).

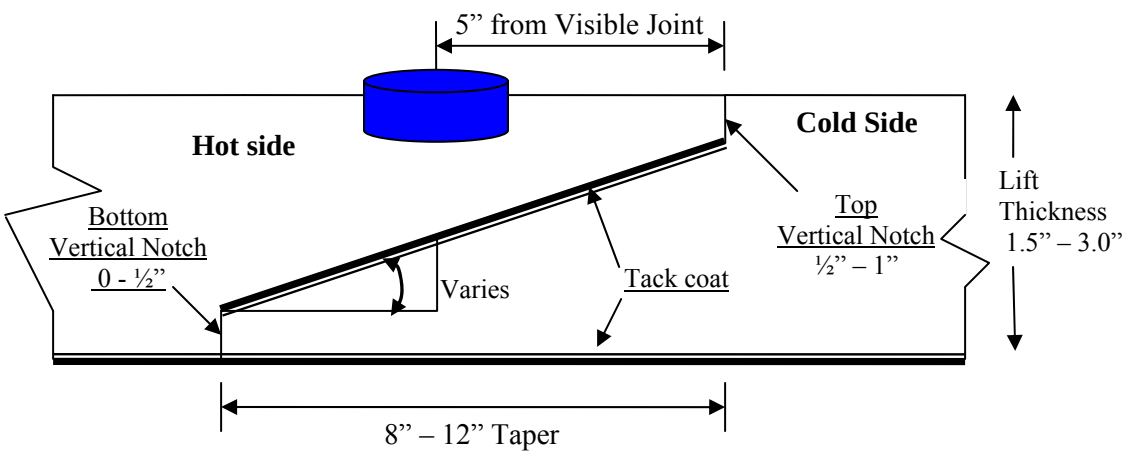

FIGURE 4.06-5: Notched Wedge Joint Cores

When Method II or Method III Butt Joint is utilized, cores shall be taken from the hot side so the edge of the core is within 1 inch of the longitudinal joint.

The cores shall be labeled by the Contractor with the project number, date placed, lot number and sub-lot number. The core’s label shall, include “M” for a mat core and “J” for a joint core. A mat core from the second lot and first sub-lot shall be labeled “M2 – 1” (Figure 4.06-4). The Engineer shall fill out a MAT-109 to accompany the cores. The Contractor shall deliver the

cores and MAT-109 to the Department's Central Lab. The Contractor shall use a container approved by the Engineer. The container shall have a lid capable of being locked shut and tamper proof. The Contractor shall use foam, bubble wrap, or another suitable material to prevent the cores from being damaged during handling and transportation. Once the cores and MAT-109 are in the container the Engineer will secure the lid using a security seal. The security seal's identification number must be documented on the MAT-109. Central Lab personnel will break the security seal and take possession of the cores.

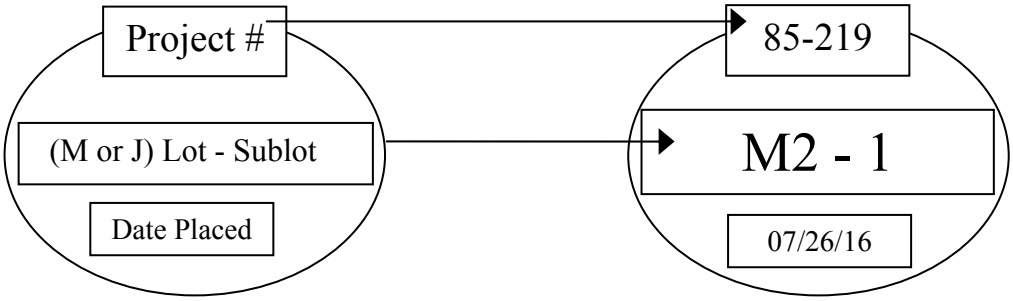

FIGURE 4.06-4: Labeling of Cores

Each core hole shall be filled within four hours upon core extraction. Prior to being filled, the hole shall be prepared by removing any free water and applying tack coat using a brush or other means to uniformly cover the cut surface. The core hole shall be filled using a bituminous concrete mixture at a minimum temperature of 240ºF containing the same or smaller nominal maximum aggregate size and compacted with a hand compactor or other mechanical means to the maximum compaction possible. The bituminous concrete shall be compacted to ⅛ inch above the finished pavement.

11. Acceptance Sampling and Testing: Sampling and testing shall be performed at a frequency not less than the minimum frequency specified in Section M.04 and sub-article 4.06.03-10.

Sampling shall be performed in accordance with ASTM D 3665, or a statistically based procedure of stratified random sampling approved by the Engineer.

Plant Material Acceptance: The Contractor shall provide the required sampling and testing during all phases of the work in accordance with Section M.04. The Department will verify the Contractor's acceptance test results. Should any test results exceed the specified tolerances in the Department's current QA Program for Materials, the Contractor test results for a subject lot or sub lot may be replaced with the Department's results for the purpose of calculating adjustments. The verification procedure is included in the Department's current QA Program for Materials.

Density Acceptance: The Engineer will perform all acceptance testing in accordance with AASHTO T 331. The density of each core will be determined using the daily production's

average maximum theoretical specific gravity (Gmm) established during the testing of the parent material at the Plant. When there was no testing of the parent material or any Gmm exceeds the specified tolerances in the Department's current QA Program for Materials, the Engineer will determine the maximum theoretical density value to be used for density calculations.

12. Density Dispute Resolution Process: The Contractor and Engineer will work in partnership to avoid potential conflicts and to resolve any differences that may arise during quality control or acceptance testing for density. Both parties will review their sampling and testing procedures and results and share their findings. If the Contractor disputes the Engineer's test results, the Contractor must submit in writing a request to initiate the Dispute Resolution Process within 7 calendar days of the notification of the test results. No request for dispute resolution will be allowed unless the Contractor provides quality control results within the timeframe described in sub-article 4.06.03-9 supporting its position. No request for Dispute Resolution will be allowed for a Density Lot in which any core was not taken within the required 5 calendar days of placement. Should the dispute not be resolved through evaluation of existing testing data or procedures, the Engineer may authorize the Contractor to obtain a new set of core samples per disputed lot. The core samples must be extracted no later than 14 calendar days from the date of Engineer's authorization.

The number and location (mat, joint, or structure) of the cores taken for dispute resolution must reflect the number and location of the original cores. The location of each core shall be randomly located within the respective original sub lot. All such cores shall be extracted and the core hole filled using the procedure outlined in Article 4.06.03. The dispute resolution results shall be added to the original results and averaged for determining the final in-place density value.

13. Corrective Work Procedure:
If pavement placed by the Contractor does not meet the specifications, and the Engineer requires its replacement or correction, the Contractor shall:

a) Propose a corrective procedure to the Engineer for review and approval prior to any corrective work commencing. The proposal shall include:
   - Limits of pavement to be replaced or corrected, indicating stationing or other landmarks that are readily distinguishable.
   - Proposed work schedule.
   - Construction method and sequence of operations.
   - Methods of maintenance and protection of traffic.
   - Material sources.
   - Names and telephone numbers of supervising personnel.

b) Any corrective courses placed as the final wearing surface shall match the specified lift thickness after compaction.

14. Protection of the Work: The Contractor shall protect all sections of the newly finished pavement from damage that may occur as a result of the Contractor's operations for the duration of the Project.

15. Cut Bituminous Concrete Pavement: Work under this item shall consist of making a straight-line cut in the pavement to the lines delineated on the plans or as directed by the Engineer. The cut shall provide a straight, clean, vertical face with no cracking, tearing or breakage along the cut edge.

4.06.04—Method of Measurement:

1. HMA S* or PMA S*: The quantity of bituminous concrete measured for payment will be determined by the documented net weight in tons accepted by the Engineer in accordance with this specification and Section M.04.

2. Adjustments: Adjustments may be applied to bituminous concrete quantities and will be measured for payment using the following formulas:

Yield Factor for Adjustment Calculation = 0.0575 Tons/SY/inch

Actual Area = [(Measured Length (ft)) x (Avg. of width measurements (ft))]

Actual Thickness (t) = Total tons delivered / [Actual Area (SY) x 0.0575 Tons/SY/inch]

a) Area: If the average width exceeds the allowable tolerance, an adjustment will be made using the following formula. The tolerance for width is equal to the specified thickness (in.) of the lift being placed.

Tons Adjusted for Area (T_A) = [(L x W_{adj})/9] x (t) x 0.0575 Tons/SY/inch = (-) Tons

Where: L = Length (ft)
(t) = Actual thickness (inches)
W_{adj} = (Designed width (ft) + tolerance /12) - Measured Width)

b) Thickness: If the actual average thickness is less than the allowable tolerance, the Contractor shall submit a repair procedure to the Engineer for approval. If the actual thickness exceeds the allowable tolerance, an adjustment will be made using the following formula:
Tons Adjusted for Thickness (T_T) = A x t_{adj} x 0.0575 = (-) Tons

Where: A = Area = {[L x (Designed width + tolerance (lift thickness)/12)] / 9}
t_{adj} = Adjusted thickness = [(Dt + tolerance) - Actual thickness]
Dt = Designed thickness (inches)

c) Weight: If the quantity of bituminous concrete representing the mixture delivered to the project is in excess of the allowable gross vehicle weight (GVW) for each vehicle, an adjustment will be made using the following formula:

Tons Adjusted for Weight (T_W) = GVW – DGW= (-) Tons

Where: DGW = Delivered gross weight as shown on the delivery ticket or measured on a certified scale.

d) Mixture Adjustment: The quantity of bituminous concrete representing the production lot at the Plant will be adjusted as follow:

i. Non-PWL Production Lot (less than 3500 tons):
The adjustment values in Table 4.06-6 and 4.06-7 shall be calculated for each sub lot based on the Air Void (AV) and Asphalt Binder Content (PB) test results for that sub lot. The total adjustment for each day's production (lot) will be computed using tables and the following formulas:

Tons Adjusted for Superpave Design (T_{SD}) = $[(AdjAV_t + AdjPB_t) / 100]$ X Tons

Percent Adjustment for Air Voids = $AdjAV_t = [AdjAV_1 + AdjAV_2 + AdjAV_i + \ldots + AdjAV_n)] /n$

Where: $AdjAV_t$ = Total percent air void adjustment value for the lot
$AdjAV_i$ = Adjustment value from Table 4.06-7 resulting from each sub lot or the average of the adjustment values resulting from multiple tests within a sub lot, as approved by the Engineer.
n = number of sub lots based on Table M.04.03-2

TABLE 4.06-6: Adjustment Values for Air Voids

Adjustment Value ($AdjAV_i$) (%)	S0.25, S0.375, S0.5, S1 Air Voids (AV)
+2.5	3.8 - 4.2
+3.125*(AV-3)	3.0 - 3.7
-3.125*(AV-5)	4.3 – 5.0
20*(AV-3)	2.3 – 2.9
-20*(AV-5)	5.1 – 5.7
-20.0	$\leq$ 2.2 or $\geq$ 5.8

Percent Adjustment for Asphalt Binder = $AdjPB_t = [(AdjPB_1 + AdjPB_2 + AdjPB_i + \ldots + AdjPB_n)] / n$

Where: $AdjPB_t$= Total percent asphalt binder adjustment value for the lot
$AdjPB_i$ = Adjustment value from Table 4.06-7 resulting from each sub lot
n = number of binder tests in a production lot

TABLE 4.06-7: Adjustment Values for Binder Content

Adjustment Value ($AdjAV_i$) (%)	**S0.25, S0.375, S0.5, S1 Pb**
0.0	JMF Pb ± 0.3
- 10.0	≤ JMF Pb - 0.4 or ≥ JMF Pb + 0.4

ii. PWL Production Lot (3500 tons or more):
For each lot, the adjustment values shall be calculated based on PWL for AV, VMA and PB test results. The lot will be considered as being normally distributed and all applicable equations in AASHTO R9 and AASHTO R42 Appendix X4 will apply.

Only one test result will be considered for each sub lot. The specification limits are listed in Section M.04.

For AV, PB and voids in mineral aggregate (VMA), the individual material quality characteristic adjustment (Adj) will be calculated as follow:

For PWL between 50 and 90%: $Adj(AV_t \text{ or } PB_t \text{ or } VMA_t) = (55 + 0.5\ PWL) - 100$
For PWL at and above 90%: $Adj(AV_t \text{ or } PB_t \text{ or } VMA_t) = (77.5 + 0.25\ PWL) - 100$

Where:
$AdjAV_t$ = Total percent AV adjustment value for the lot
$AdjPB_t$= Total percent PB adjustment value for the lot
$AdjVMA_t$= Total percent VMA adjustment value for the lot

Lots with PWL less than 50% in any of the three individual material quality characteristics will be evaluated under 1.06.04.

The total adjustment for each production lot will be computed using the following formula:

Tons Adjusted for Superpave Design (T_{SD}) = $[(0.5AdjAV_t + 0.25AdjPB_t + 0.25\ AdjVMA_t) / 100]$ X Tons

iii. Partial Lots:
Lots with less than 4 sublots will be combined with the prior lot. If there is no prior lot with equivalent material or if the last test result of the prior lot is over 30 calendar days old, the adjustment will be calculated as indicated in 4.06.04-2.d.i.
Lots with 4 or more sublots will be calculated as indicated in 4.06.04-2.d.ii.

e) Density Adjustment: The quantity of bituminous concrete measured for payment in a lift of pavement specified to be 1½ inches or greater may be adjusted for density. Separate density adjustments will be made for each lot and will not be combined to establish one density adjustment. The final lot quantity shall be the difference between the total payable tons for the project and the sum of the previous lots. If either the Mat or Joint adjustment value is "remove and replace", the density lot shall be removed and replaced (curb to curb).

No positive adjustment will be applied to a Density Lot in which any core was not taken within the required 5 calendar days of placement.

Tons Adjusted for Density (T_D) = [{(PA_M x .50) + (PA_J x .50)} / 100] X Density Lot Tons

Where: T_D = Total tons adjusted for density for each lot
PA_M = Mat density percent adjustment from Table 4.06-9
PA_J = Joint density percent adjustment from Table 4.06-10

TABLE 4.06-9: Adjustment Values for Pavement Mat density

Average Core Result Percent Mat Density	Percent Adjustment (Bridge and Non-Bridge) (1)(2)
97.1 - 100	-1.667*(ACRPD-98.5)
94.5 – 97.0	+2.5
93.5 – 94.4	+2.5*(ACRPD-93.5)
92.0 – 93.4	0
90.0 – 91.9	-5*(92-ACRPD)
88.0 – 89.9	-10*(91-ACRPD)
87.0 – 87.9	-30
86.9 or less	Remove and Replace (curb to curb)

TABLE 4.06-10: Adjustment Values for Pavement Joint Density

Average Core Result Percent Joint Density	Percent Adjustment (Bridge and Non-Bridge) [(1)(2)]
97.1 – 100	-1.667*(ACRPD-98.5)
93.5 – 97.0	+2.5
92.0 – 93.4	+1.667*(ACRPD-92)
91.0 – 91.9	0
89.0 – 90.9	-7.5*(91-ACRPD)
88.0 – 88.9	-15*(90-ACRPD)
87.0 – 87.9	-30
86.9 or less	Remove and Replace (curb to curb)

[(1)] ACRPD = Average Core Result Percent Density
[(2)] All Percent Adjustments to be rounded to the second decimal place. For example, 1.667 is to be rounded to 1.67.

3. Transitions for Roadway Surface: The installation of permanent transitions shall be measured under the appropriate item used in the formation of the transition.

The quantity of material used for the installation of temporary transitions shall be measured for payment under the appropriate item used in the formation of the transition. The installation and removal of a bond breaker, and the removal and disposal of any temporary transition formed by milling or with bituminous concrete pavement is not measured for payment.

4. Cut Bituminous Concrete Pavement: The quantity of bituminous concrete pavement cut will be measured in accordance with Article 2.02.04.

5. Material for Tack Coat: The quantity of tack coat will be measured for payment by the number of gallons furnished and applied on the Project and approved by the Engineer. No tack coat material shall be included that is placed in excess of the tolerance described in Article 4.06.03.

a. Container Method- Material furnished in a container will be measured to the nearest ½ gallon. The volume will be determined by either measuring the volume in the original container by a method approved by the Engineer or using a separate graduated container capable of measuring the volume to the nearest ½ gallon. The container in which the material is furnished must include the description of material, including lot number or batch number and manufacturer or product source.

b. Vehicle Method-

i. Measured by Weight: The number of gallons furnished will be determined by weighing the material on calibrated scales furnished by the Contractor. To convert weight to gallons, one of the following formulas will be used:

$$\text{Tack Coat (gallons at 60°F)} = \frac{\text{Measured Weight (pounds)}}{\text{Weight per gallon at 60°F}}$$

$$\text{Tack Coat (gallons at 60°F)} = \frac{0.996 \times \text{Measured Weight (pounds)}}{\text{Weight per gallon at 77°F}}$$

ii. Measured by automated metering system on the delivery vehicle:

Tack Coat (gallons at 60°F) = Factor (from Table 4.06-11) multiplied by the measured gallons.

TABLE 4.06-11: Factor to Convert Volume of Tack Coat to 60°F

Tack Coat Application Temperature (°F)	Factor	Tack Coat Application Temperature (°F)	Factor
75	0.996	120	0.985
80	0.995	125	0.984
85	0.994	130	0.983
90	0.993	135	0.982
95	0.991	140	0.980
100	0.990	145	0.979
105	0.989	150	0.978
110	0.988	155	0.977
115	0.986	160	0.976

6. Material Transfer Vehicle (MTV): The furnishing and use of a MTV will be measured separately for payment based on the actual number of surface course tons delivered to a paver using the MTV.

4.06.05—Basis of Payment:

1. HMA S* or PMA S*: The furnishing and placing of bituminous concrete will be paid for at the Contract unit price per ton for "HMA S*" or "PMA S*".

- All costs associated with providing illumination of the work area are included in the general cost of the work.
- All costs associated with cleaning the surface to be paved, including mechanical sweeping, are included in the general cost of the work. All costs associated with constructing longitudinal joints are included in the general cost of the work.

- All costs associated with obtaining cores for acceptance testing and dispute resolution are included in the general cost of the work.

2. Bituminous Concrete Adjustment Costs: The adjustment will be calculated using the formulas shown below if all of the measured adjustments in Article 4.06.04 are not equal to zero. A positive or negative adjustment will be applied to monies due the Contractor.

Production Lot: $[T_T + T_A + T_W + T_{SD}]$ **x Unit Price = Est. (P)**

Density Lot: T_D **x Unit Price = Est. (D)**

Where: Unit Price = Contract unit price per ton per type of mixture

T_* = Total tons of each adjustment calculated in Article 4.06.04

Est. ( ) = Pay Unit represented in dollars representing incentive or disincentive.

The Bituminous Concrete Adjustment Cost item if included in the bid proposal or estimate is not to be altered by the Contractor.

3. Transitions for Roadway Surface: The installation of permanent transitions shall be paid under the appropriate item used in the formation of the transition. The quantity of material used for the installation of temporary transitions shall be paid under the appropriate pay item used in the formation of the transition. The installation and removal of a bond breaker, and the removal and disposal of any temporary transition formed by milling or with bituminous concrete pavement is included in the general cost of the work.

4. The cutting of bituminous concrete pavement will be paid in accordance with Article 2.02.05.

5. Material for tack coat will be paid for at the Contract unit price per gallon at 60°F for "Material for Tack Coat".

6. The Material Transfer Vehicle (MTV) will be paid at the Contract unit price per ton for a "Material Transfer Vehicle".

Pay Item*	Pay Unit*
HMA S*	ton
PMA S*	ton
Bituminous Concrete Adjustment Cost	est.
Material for Tack Coat	gal.
Material Transfer Vehicle	ton

*For contracts administered by the State of Connecticut, Department of Administrative Services, the pay items and pay units are as shown in contract award price schedule.

SECTION M.04 - BITUMINOUS CONCRETE MATERIALS

Section M.04 is being deleted in its entirety and replaced with the following:

M.04.01—Bituminous Concrete Materials and Facilities
M.04.02—Mix Design and Job Mix Formula (JMF)
M.04.03—Production Requirements

M.04.01—Bituminous Concrete Materials and Facilities: Each source of component material, Plant and laboratory used to produce and test bituminous concrete must be qualified on an annual basis by the Engineer. AASHTO or ASTM Standards noted with an (M) have been modified and are detailed in Table M.04.03-6.

Aggregates from multiple sources of supply must not be blended or stored in the same stockpile.

1. Coarse Aggregate:

All coarse aggregate shall meet the requirements listed in Section M.01.

2. Fine Aggregate:

All fine aggregate shall meet the requirements listed in Section M.01

3. Mineral Filler:

Mineral filler shall conform to the requirements of AASHTO M 17.

4. Performance Graded (PG) Asphalt Binder:

a. General:

i. PG asphalt binder shall be uniformly mixed and blended and be free of contaminants such as fuel oils and other solvents. Binder shall be properly heated and stored to prevent damage or separation.

ii. The binder shall meet the requirements of AASHTO M 332 and shall be graded or verified in accordance with AASHTO R 29. The Contractor shall submit a Certified Test Report and bill of lading representing each delivery in accordance with AASHTO R 26(M). The Certified Test Report must also indicate the binder specific gravity at 77ºF; rotational viscosity at 275ºF and 329ºF and the mixing and compaction viscosity-temperature chart for each shipment.

iii. The Contractor shall submit the name(s) of personnel responsible for receipt, inspection, and record keeping of PG binder. Contractor plant personnel shall document specific storage tank(s) where binder will be transferred and stored until used, and provide binder samples to the Engineer upon request. The person(s) shall assure that each shipment is accompanied by a statement certifying that the transport vehicle was inspected before loading and was found acceptable for the material

shipped, and, that the binder is free of contamination from any residual material, along with two (2) copies of the bill of lading.

iv. The blending or combining of PG binders in one storage tank at the Plant from different suppliers, grades, or additive percentages is prohibited.

b. Basis of Approval:

The request for approval of the source of supply shall list the location where the material will be manufactured, and the handling and storage methods, along with necessary certification in accordance with AASHTO R 26(M). Only suppliers/refineries that have an approved "Quality Control Plan for Performance Graded Binders" formatted in accordance with AASHTO R 26(M) may supply PG binders to Department projects.

c. Standard Performance Grade (PG) Binder:

i. Standard PG binder shall be defined as "Neat". Neat PG binders shall be free from modification with: fillers, extenders, reinforcing agents, adhesion promoters, thermoplastic polymers, acid modification and other additives such as re-refined motor oil, and shall indicate such information on each bill of lading and certified test report.

ii. The standard asphalt binder grade shall be PG 64S-22.

d. Modified Performance Grade (PG) Binder:

The modified asphalt binder shall be Performance Grade PG 64E-22 asphalt modified solely with a Styrene-Butadiene-Styrene (SBS) polymer. The polymer modifier shall be added at either the refinery or terminal and delivered to the bituminous concrete production facility as homogenous blend. The stability of the modified binder shall be verified in accordance with ASTM D7173 using the Dynamic Shear Rheometer (DSR). The DSR $G^*/\sin(\delta)$ results from the top and bottom sections of the ASTM D7173 test shall not differ by more than 10%. The results of ASTM D7173 shall be included on the Certified Test Report. The binder shall meet the requirements of AASHTO M 332 (including Appendix X1) and AASHTO R 29.

e. Warm Mix Additive or Technology:

i. The warm mix additive or technology must be listed on the North East Asphalt User Producer Group (NEAUPG) Qualified Warm Mix Asphalt (WMA) Technologies List at the time of bid, which may be accessed online at http://www.neaupg.uconn.edu.

ii. The warm mix additive shall be blended with the asphalt binder in accordance with the manufacturer's recommendations.

iii. The blended binder shall meet the requirements of AASHTO M 332 and shall be graded or verified in accordance with AASHTO R 29 for the specified binder grade. The Contractor shall submit a Certified Test Report showing the results of the testing demonstrating the binder grade. In addition, it must include the grade of the virgin

binder, the brand name of the warm mix additive, the manufacturer's suggested rate for the WMA additive, the water injection rate (when applicable) and the WMA Technology manufacturer's recommended mixing and compaction temperature ranges.

5. Emulsified Asphalts:

a. General:

i. The emulsified asphalt shall meet the requirements of AASHTO M 140 or AASHTO M 208 as applicable.

ii. The emulsified asphalts shall be free of contaminants such as fuel oils and other solvents.

iii. The blending at mixing plants of emulsified asphalts from different suppliers is prohibited.

.

b. Basis of Approval

i. The request for approval of the source of supply shall list the location where the material is manufactured, the handling and storage methods, and certifications in accordance with AASHTO PP 71. Only suppliers that have an approved "Quality Control Plan for Emulsified Asphalt" formatted in accordance with AASHTO PP 71 and submit monthly split samples per grade to the Engineer may supply emulsified asphalt to Department projects.

ii. Each shipment of emulsified asphalt delivered to the project site shall be accompanied with the corresponding Certified Test Report listing Saybolt viscosity, residue by evaporation, penetration of residue, and weight per gallon at 77°F and Material Certificate.

iii. Anionic emulsified asphalts shall conform to the requirements of AASHTO M-140. Materials used for tack coat shall not be diluted and meet grade RS-1 or RS-1H. When ambient temperatures are 80˚F and rising, grade SS-1 or SS-lH may be substituted if permitted by the Engineer.

iv. Cationic emulsified asphalt shall conform to the requirements of AASHTO M-208. Materials used for tack coat shall not be diluted and meet grade CRS-1. The settlement and demulsibility test will not be performed unless deemed necessary by the Engineer. When ambient temperatures are 80˚F and rising, grade CSS-1 or CSS-lh may be substituted if permitted by the Engineer.

6. Reclaimed Asphalt Pavement (RAP):

a. General: RAP is a material obtained from the cold milling or removal and processing of bituminous concrete pavement. RAP material shall be crushed to 100% passing the ½ inch sieve and free from contaminants such as joint compound, wood, plastic, and metals.

b. Basis of Approval: The RAP material will be accepted on the basis of one of the following criteria:

i. When the source of all RAP material is from pavements previously constructed on Department projects, the Contractor shall provide a Materials Certificate listing the detailed locations and lengths of those pavements and that the RAP is only from those locations listed.

ii. When the RAP material source or quality is not known, the Contractor shall request for approval to the Engineer at least 30 calendar days prior to the start of the paving operation. The request shall include a Material Certificate and applicable test results stating that the RAP consists of aggregates that meet the specification requirements of sub articles M.04.01-1 through 3, and, that the binder in the RAP is substantially free of solvents, tars and other contaminants. The Contractor is prohibited from using unapproved material on Department projects and shall take necessary action to prevent contamination of approved RAP stockpiles. Stockpiles of unapproved material shall remain separate from all other RAP materials at all times. The request for approval shall include the following:

1. A 50-pound sample of the RAP to be incorporated into the recycled mixture.
2. A 25-pound sample of the extracted aggregate from the RAP.

7. Crushed Recycled Container Glass (CRCG):

a. Requirements: The Contractor may propose to use clean and environmentally-acceptable CRCG in an amount not greater than 5% by weight of total aggregate.

b. Basis of Approval: The Contractor shall submit to the Engineer a request to use CRCG. The request shall state that the CRCG contains no more than 1% by weight of contaminants such as paper, plastic and metal and conform to the following gradation:

CRCG Grading Requirements	
Sieve Size	Percent Passing
3/8-inch	100
No. 4	35-100
No. 200	0.0-10.0

The Contractor shall submit a Materials Certificate to the Engineer stating that the CRCG complies with all the applicable requirements in this specification.

8. Joint Seal Material:

a. Requirements: Joint seal material must meet the requirements of ASTM D 6690 – Type 2. The Contractor shall submit a Material Certificate in accordance with Article 1.06.07 certifying that the joint seal material meets the requirements of this specification.

9. Recycled Asphalt Shingles (RAS)

a. Requirements: RAS shall consist of processed asphalt roofing shingles from post-consumer asphalt shingles or from manufactured shingle waste. The RAS material under consideration for use in bituminous concrete mixtures must be certified as being asbestos free and shall be entirely free of whole, intact nails. The RAS material shall meet the requirements of AASHTO MP 23.

The producer shall test the RAS material to determine the asphalt content and the gradation of the RAS material. The producer shall take necessary action to prevent contamination of RAS stockpiles.

The Contractor shall submit a Materials Certificate to the Engineer stating that the RAS complies with all the applicable requirements in this specification.

10. Plant Requirements:

a. General: The Plant producing bituminous concrete shall comply with AASHTO M 156.

b. Storage Silos: The Contractor may use silos for short-term storage with the approval of the Engineer. A silo must have heated cones and an unheated silo cylinder if it does not contain a separate internal heating system. When multiple silos are filled, the Contractor shall discharge one silo at a time. Simultaneous discharge of multiple silos for the same Project is not permitted.

Type of silo cylinder	Maximum storage time for all classes (hr)	
	HMA	WMA/PMA
Open Surge	4	Mfg Recommendations*
Unheated – Non-insulated	8	Mfg Recommendations*
Unheated – Insulated	18	Mfg Recommendations*
Heated – No inert gas	TBD by the Engineer	

*Not to exceed HMA limits

c. Documentation System: The mixing plant documentation system shall include equipment for accurately proportioning the components of the mixture by weight and in the proper order, controlling the cycle sequence and timing the mixing operations. Recording equipment shall monitor the batching sequence of each component of the

mixture and produce a printed record of these operations on each Plant ticket, as specified herein.

If recycled materials are used, the Plant tickets shall include their dry weight, percentage and daily moisture content.

If a WMA Technology is added at the Plant, the Plant tickets shall include the actual dosage rate.

For drum Plants, the Plant ticket shall be produced at 5 minute intervals and maintained by the vendor for a period of three years after the completion of the project.

For batch Plants, the Plant ticket shall be produced for each batch and maintained by the vendor for a period of three years after the completion of the project. In addition, an asterisk (*) shall be automatically printed next to any individual batch weight(s) exceeding the following tolerances:

Each Aggregate Component	±1.5% of individual or cumulative target weight for each bin
Mineral Filler	±0.5% of the total batch
Bituminous Material	±0.1% of the total batch
Zero Return (Aggregate)	±0.5% of the total batch
Zero Return (Bituminous Material)	±0.1% of the total batch

The entire batching and mixing interlock cut-off circuits shall interrupt and stop the automatic batching operations when an error exceeding the acceptable tolerance occurs in proportioning.

The scales shall not be manually adjusted during the printing process. In addition, the system shall be interlocked to allow printing only when the scale has come to a complete rest. A unique printed character (m) shall automatically be printed on the ticket when the automatic batching sequence is interrupted or switched to auto-manual or full manual during proportioning.

d. Aggregates: Aggregate stockpiles shall be managed to prevent segregation and cross contamination. For drum plants only, the percent moisture content at a minimum prior to production and half way through production shall be determined.

e. Mixture: The dry and wet mix times shall be sufficient to provide a uniform mixture and a minimum particle coating of 95% as determined by AASHTO T 195(M) .

Bituminous concrete mixtures shall contain no more than 0.5% moisture when tested in accordance with AASHTO T 329.

f. RAP: RAP moisture content shall be determined a minimum of twice daily (prior to production and halfway through production).

g. Asphalt Binder: A binder log shall be submitted to the Department's Central Lab on a monthly basis.

h. Warm mix additive: For mechanically foamed WMA, the water injection rate shall be monitored during production and not exceed 2.0% by total weight of binder. For additive added at the Plant, the dosage rate shall be monitored during production.

i. Plant Laboratory: The Contractor shall maintain a laboratory at the production facility to test bituminous concrete mixtures during production. The laboratory shall have a minimum of 300 square feet, have a potable water source and drainage in accordance with the CT Department of Public Health Drinking Water Division, and be equipped with all necessary testing equipment as well as with a PC, printer, and telephone with a dedicated hard-wired phone line. In addition, the PC shall have internet connection and a functioning web browser with unrestricted access to https://ctmail.ct.gov. This equipment shall be maintained in working order at all times and be made available for use by the Engineer.

The laboratory shall be equipped with a heating system capable of maintaining a minimum temperature of 65°F. It shall be clean and free of all materials and equipment not associated with the laboratory. Sufficient light and ventilation must be provided. During summer months, adequate cooling or ventilation must be provided so the indoor air temperature shall not exceed the ambient outdoor temperature.
The laboratory testing apparatus, supplies, and safety equipment shall be capable of performing all tests in their entirety that are referenced in AASHTO R 35and AASHTO M 323. The Contractor shall ensure that the Laboratory is adequately supplied at all times during the course of the project with all necessary testing supplies and equipment.

The Contractor shall maintain a list of laboratory equipment used in the acceptance testing processes including but not limited to, balances, scales, manometer/vacuum gauge, thermometers, gyratory compactor, clearly showing calibration and/or inspection dates, in accordance with AASHTO R 18. The Contractor shall notify the Engineer if any modifications are made to the equipment within the laboratory. The Contractor shall take immediate action to replace, repair, and/or recalibrate any piece of equipment that is out of calibration, malfunctioning, or not in operation.

M.04.02—Mix Design and Job Mix Formula (JMF)

1. Curb Mix:

a. Requirements: The Contractor shall use bituminous concrete that meets the requirements of Table M.04.02-1. RAP may be used in 5% increments by weight up to 30%.

b. Basis of Approval: Annually, an approved JMF based on a mix design for curb mix must be on file with the Engineer prior to use. .
Any change in component source of supply or consensus properties must be approved by the Engineer. A revised JMF shall be submitted prior to use.

TABLE M.04.02 – 1:
Control Points for Curb Mix Mixtures

Notes: (a) Compaction Parameter 50gyration N_{des}. (b) The percent passing the #200 sieve shall not exceed the percentage of bituminous asphalt binder.

Mix	Curb Mix	Production Tolerances from JMF target
Grade of PG Binder content %	PG 64S-22 6.5 - 9.0	0.4
Sieve Size		
# 200	3.0 – 8.0 (b)	2.0
# 50	10 - 30	4
# 30	20 - 40	5
# 8	40 - 70	6
# 4	65 - 87	7
¼”		
3/8 “	95 - 100	8
½ “	100	8
¾”		8
1”		
2”		
Additionally, the fraction of material retained between any two consecutive sieves shall not be less than 4%		
Mixture Temperature		
Binder	325°F maximum	
Aggregate	280-350° F	
Mixtures	265-325° F	
Mixture Properties		
Air Voids (VA) %	0 – 4.0 (a)	

2. Superpave Design Method – S0.25, S0.375, S0.5, and S1

a. Requirements: All designated mixes shall be designed using the Superpave mix design method in accordance with AASHTO R 35. A JMF based on the mix design shall meet the requirements of Tables M.04.02-2 through Table M.04.02-5. Each JMF must be submitted no less than seven (7) days prior to production and must be approved by the Engineer prior to use. All approved JMFs expire at the end of the calendar year.

All aggregate component consensus properties and tensile strength ratio (TSR) specimens shall be tested at an AASHTO Materials Reference Laboratory (AMRL) by NETTCP certified technicians.
All bituminous concrete mixes shall be tested for stripping susceptibility by performing the tensile strength ratio (TSR) test procedure in accordance with AASHTO T 283(M) at a minimum every 36 months. The compacted specimens may be fabricated at the Plant and then tested at an AMRL accredited facility. TSR specimens, and corresponding JMF shall be submitted with each test report.

i. Superpave Mixtures with RAP: RAP may be used with the following conditions:

- RAP amounts up to 15% may be used with no binder grade modification.
- RAP amounts up to 20% may be used provided a new JMF is approved by the Engineer. The JMF submittal shall include the grade of virgin binder added. The JMF shall be accompanied by a blending chart and supporting test results in accordance with AASHTO M 323 Appendix X1, or by testing that shows the combined binder (recovered binder from the RAP, virgin binder at the mix design proportions, warm mix asphalt additive and any other modifier if used) meets the requirements of the specified binder grade.
- Two representative samples of RAP shall be obtained. Each sample shall be split and one split sample shall be tested for binder content in accordance with AASHTO T 164 and the other in accordance AASHTO T 308.
- RAP material shall not be used with any other recycling option.

ii. Superpave Mixtures with RAS: RAS may be used solely in HMA S1 mixtures with the following conditions:

- RAS amounts up to 3% may be used.
- RAS total binder replacement up to 15% may be used with no binder grade modification.
- RAS total binder replacement up to 20% may be used provided a new JMF is approved by the Engineer. The JMF submittal shall include the grade of virgin binder added. The JMF shall be accompanied by a blending chart and supporting test results in accordance to AASHTO M 323 appendix X1 or by testing that shows the combined binder (recovered binder from the RAP, virgin binder at the mix design proportions, warm mix asphalt additive and any other modifier if used) meets the requirements of the specified binder grade.
- Superpave Mixtures with RAS shall meet AASHTO PP 78 design considerations. The RAS asphalt binder availability factor (F) used in AASHTO PP 78 shall be 0.85.

iii. Superpave Mixtures with CRCG: CRCG may be used solely in HMA S1 mixtures. One percent of hydrated lime, or other accepted non-stripping agent, shall be added to all mixtures containing CRCG. CRCG material shall not be used with any other recycling option.

b. Basis of Approval: The following information must be included with the JMF submittal:
- Gradation, consensus properties and specific gravities of the aggregate, RAP or RAS.
- Average asphalt content of the RAP or RAS by AASHTO T 164.
- Source of RAP or RAS, and percentage to be used.
- Warm mix Technology, manufacturer's recommended additive rate and tolerances and manufacturer recommended mixing and compaction temperatures.
- TSR test report and anti-strip manufacturer and recommended dosage rate if applicable.
- Mixing and compaction temperature ranges for the mix with and without the warm-mix technology incorporated.
- JMF ignition oven correction factor by AASHTO T 308.

With each JMF submittal, the following samples shall be submitted to the Division of Materials Testing:
- 4 - one quart cans of PG binder, with corresponding Safety Data Sheet (SDS)
- 1 - 50 lbs bag of RAP
- 2 – 50 lbs bag of plant blended virgin aggregate

A JMF may not be approved if any of the properties of the aggregate components or mix do not meet the verification tolerances as described in the Department's current QA Program for Materials, Acceptance and Assurance Testing Policies and Procedures.

Any material based on a JMF, once approved, shall only be acceptable for use when it is produced by the designated plant, it utilizes the same components, and the production of material continues to meet all criteria as specified herein, and component aggregates are maintained within the tolerances shown in Table M.04.02-2. A new JMF must be submitted to the Engineer for approval whenever a new component source is proposed.

Only one mix with one JMF will be approved for production at any one time. Switching between approved JMF mixes with different component percentages or sources of supply is prohibited.

c. Mix Status: Each facility will have each type of mixture rated based on the results of the previous year's production. Mix Status will be provided to each bituminous concrete producer annually prior to the beginning of the paving season.

The rating criteria are based on compliance with Air Voids and Voids in Mineral Aggregate (VMA) as indicated in Table M.04.03-4 and are calculated as follows:

Criteria A: Percentage of acceptance test results with compliant air voids.

Criteria B: The average of the percentage of acceptance test results with compliant VMA, and percentage of acceptance test results with compliant air voids.

The final rating assigned will be the lower of the rating obtained with Criteria A or B.

Mix status is defined as:

"A" – Approved:
Assigned to each mixture type from a production facility with a current rating of 70% or greater, or to each mixture type completing a successful PPT.

"PPT" – Pre-Production Trial:
Temporarily assigned to each mixture type from a production facility when:

1. there are no compliant acceptance production test results submitted to the Department from the previous year;
2. there is a source change in one or more aggregate components
3. there is a component percentage change of more than 5% by weight;
4. there is a change in RAP percentage;
5. the mixture has a rating of less than 70% from the previous season;
6. a new JMF not previously submitted.

Bituminous concrete mixtures with a "PPT" status cannot be used on Department projects. Testing shall be performed by the Producer with NETTCP certified personnel on material under this status. Test results must confirm that specifications requirements in Table M.04.02-2 and Table M.04.02-5 are met before material can be used. One of the following methods must be used to verify the test results:

Option A: Schedule a day when a Department Inspector can be at the facility to witness testing or,

Option B: When the Contractor or their representative performs testing without being witnessed by an Inspector, the Contractor shall submit the test results and a split sample including 2 gyratory molds, 5,000 grams of boxed bituminous concrete, and 5,000 grams of cooled loose bituminous concrete for verification testing and approval.

Option C: When the Contractor or their representative performs testing without being witnessed by a Department Inspector, the Engineer may verify the mix in the Contractor's laboratory.

Witnessing or verifying by the Department of compliant test results will change the mix's status to an "A".

The differences between the Department's test results and the Contractor's must be within the "C" tolerances included in the Department's QA Program for Materials, Acceptance and Assurance Testing Policies and Procedures in order to be verified.

"U" – Not Approved:

Status assigned to a type of mixture that does not have an approved JMF. . Bituminous concrete mixtures with a "U" status cannot be used on Department projects.

TABLE M.04.02– 2: Superpave Mixture Design Criteria

Notes: (1) For all mixtures using a WMA technology, the mix temperature shall meet PG binder and WMA manufacturer's recommendations.

	S0.25		S0.375		S0.5		S1	
Sieve	CONTROL POINTS		CONTROL POINTS		CONTROL POINTS		CONTROL POINTS	
inches	Min (%)	Max (%)	Min (%)	Max (%)	Min (%)	Max (%)	Min (%)	Max (%)
2.0	-	-	-	-	-	-	-	-
1.5	-	-	-	-	-	-	100	-
1.0	-	-	-	-	-	-	90	100
3/4	-	-	-	-	100	-	-	90
1/2	100	-	100	-	90	100	-	-
3/8	97	100	90	100	-	90	-	-
#4	75	90	-	75	-	-	-	-
#8	32	67	32	67	28	58	19	45
#16	-	-	-	-	-	-	-	-
#30	-	-	-	-	-	-	-	-
#50	-	-	-	-	-	-	-	-
#100	-	-	-	-	-	-	-	-
#200	2.0	10.0	2.0	10.0	2.0	10.0	1.0	7.0
VMA (%)	16.5 ± 1		16.0 ± 1		15.0 ± 1		13.0 ± 1	
VA (%)	4.0 ± 1		4.0 ± 1		4.0 ± 1		4.0 ± 1	
Gse	JMF value		JMF value		JMF value		JMF value	
Gmm	JMF ± 0.030		JMF ± 0.030		JMF ± 0.030		JMF ± 0.030	
Dust / binder	0.6 – 1.2		0.6 – 1.2		0.6 – 1.2		0.6 – 1.2	
Mix Temp(1)	265 – 325°F		265 – 325°F		265 – 325°F		265 – 325°F	
TSR	≥ 80%		≥ 80%		≥ 80%		≥ 80%	
T-283 Stripping	Minimal, as determined by the Engineer							

TABLE M.04.02–3: Superpave Consensus Properties Requirements for Combined Aggregate

Notes: (1) 95/90 denotes that a minimum of 95% of the coarse aggregate, by mass, shall have one fractured face and that a minimum of 90% shall have two fractured faces.. (2) Criteria presented as maximum Percent by mass of flat and elongated particles of materials retained on the #4 sieve, determined at 5:1 ratio.

Traffic Level	Design ESALs (80 kN), Millions	Coarse Aggregate Angularity (1) ASTM D 5821, Minimum %	Fine Aggregate Angularity AASHTO T 304, Method A Minimum %	Flat and Elongated Particles (2) ASTM D 4791, Maximum %	Sand Equivalent AASHTO T 176, Minimum %
1	< 0.3	55/- -	40	10	40
2	0.3 to < 3.0	75/- -	40	10	40
3	≥ 3.0	95/90	45	10	45

TABLE M.04.02– 4: Superpave Traffic Levels and Design Volumetric Properties

Traffic Level	Design ESALs	Number of Gyrations by Superpave Gyratory Compactor			Percent Density of Gmm from HMA/WMA specimen			Voids Filled with Asphalt (VFA) Based on Nominal mix size – inch			
	(million)	Nini	Ndes	Nmax	Nini	Ndes	Nmax	0.25	0.375	0.5	1
1	< 0.3	6	50	75	≤ 91.5	96.0	≤ 98.0	70 - 80	70 - 80	70 - 80	67 - 80
2	0.3 to < 3.0	7	75	115	≤ 90.5	96.0	≤ 98.0	65 - 78	65 - 78	65 - 78	65 - 78
3	≥ 3.0	8	100	160	≤ 90.0	96.0	≤ 98.0	65 – 77	73 - 76	65 - 75	65 - 75

TABLE M.04.02– 5:
Superpave Minimum Binder Content by Mix Type and Level

Mix Type	Level	Binder Content Minimum
S0.25	1	5.70
S0.25	2	5.60
S0.25	3	5.50
S0.375	1	5.70
S0.375	2	5.60
S0.375	3	5.50
S0.5	1	5.10
S0.5	2	5.00
S0.5	3	4.90
S1	1	4.60
S1	2	4.50
S1	3	4.40

M.04.03— Production Requirements:

1. Standard Quality Control Plan (QCP) for Production:

The QCP for production shall describe the organization and procedures which the Contractor shall use to administer quality control. The QCP shall include the procedures used to control the production process, to determine when immediate changes to the processes are needed, and to implement the required changes. The QCP must detail the inspection, sampling and testing protocols to be used, and the frequency for each.

Control Chart(s) shall be developed and maintained for critical aspect(s) of the production process as determined by the Contractor. The control chart(s) shall identify the material property, applicable upper and lower control limits, and be updated with current test data. As a minimum, the following quality characteristics shall be included in the control charts: percent passing #4 sieve, percent passing #200 sieve, binder content, air voids, Gmm and VMA. The control chart(s) shall be used as part of the quality control system to document variability of the bituminous concrete production process. The control chart(s) shall be submitted to the Engineer the first day of each month.

The QCP shall also include the name and qualifications of a Quality Control Manager. The Quality Control Manager shall be responsible for the administration of the QCP, including compliance with the plan and any plan modifications.

The Contractor shall submit complete production testing records to the Engineer within 24 hours in a manner acceptable to the Engineer.

The QCP shall also include the name and qualifications of any outside testing laboratory performing any QC functions on behalf of the Contractor. The QCP must also include a list of sampling & testing methods and frequencies used during production, and the names of all Quality Control personnel and their duties.

Approval of the QCP does not imply any warranty by the Engineer that adherence to the plan will result in production of bituminous concrete that complies with these specifications. The Contractor shall submit any changes to the QCP as work progresses.

2. Acceptance Requirements:

i. General:

Acceptance samples shall be obtained from the hauling vehicles and tested by the Contractor at the Plant.

The Contractor shall submit all acceptance tests results to the Engineer within 24 hours or prior to the next day's production. All acceptance test specimens and supporting documentation must be retained by the Contractor and may be disposed of with the approval of the Engineer. All quality control specimens shall be clearly labeled and separated from the acceptance specimens.

Contractor personnel performing acceptance sampling and testing must be present at the facility prior to, during, and until completion of production, and be certified as a NETTCP HMA Plant Technician or Interim HMA Plant Technician and be in good standing. Production of material for use on State projects must be suspended by the Contractor if such personnel are not present. Technicians found by the Engineer to be non-compliant with NETTCP policies and procedures or Department policies may be removed by the Engineer from participating in the acceptance testing process for Department projects until their actions can be reviewed.

Anytime during production that testing equipment becomes defective or inoperable, production can continue for a maximum of 1 hour. The Contractor shall obtain box sample(s) in accordance with Table M.04.03-2 to satisfy the daily acceptance testing requirement for the quantity shipped to the project. The box sample(s) shall be tested once the equipment issue has been resolved to the satisfaction of the Engineer. Production beyond 1 hour may be considered by the Engineer. Production will not be permitted beyond that day until the subject equipment issue has been resolved.

Verification testing will be performed by the Engineer in accordance with the Department's QA Program for Materials.

Should the Department be unable to verify the Contractor's acceptance test result(s) due to a failure of the Contractor to retain acceptance test specimens or supporting documentation, the Contractor shall review its quality control plan, determine the cause of the nonconformance and

respond in writing within 24 hours to the Engineer describing the corrective action taken. In addition, the Contractor must provide supporting documentation or test results to validate the subject acceptance test result(s). The Engineer may invalidate any adjustments for material corresponding to the subject acceptance test(s). Failure of the Contractor to adequately address quality control issues at a facility may result in suspension of production for Department projects at that facility.

ii. Curb Mix Acceptance Sampling and Testing Procedures:

Curb Mix shall be tested in accordance to Table M.04.03-1 by the Contractor at a frequency of one test per every 250 tons of cumulative production, regardless of the day of production.

TABLE M.04.03 – 1: Curb Mix Acceptance Test Procedures

Protocol	Reference	Description
1	**AASHTO T 30(M)**	Mechanical Analysis of Extracted Aggregate
2	**AASHTO T 168**	Sampling of Bituminous Concrete
3	**AASHTO T 308**	Binder content by Ignition Oven method (adjusted for aggregate correction factor)
4	**AASHTO T 209(M)(2)**	Theoretical Maximum Specific Gravity and Density of Bituminous Paving Mixtures
5	**AASHTO T 312(2)**	(1)Superpave Gyratory molds compacted to N_{des}
6	**AASHTO T 329**	Moisture Content of Hot-Mix Asphalt (HMA) by Oven Method

Notes: (1) One set equals two six-inch molds. Molds to be compacted to 50 gyrations
(2) Once per year or when requested by the Engineer

a. Determination of Off-Test Status:

i. Curb Mix is considered “off test" when the test results indicate that any single value for bitumen content or gradation are not within the tolerances shown in Table M.04.02-1. If the mix is “off test”, the Contractor must take immediate actions to correct the deficiency and a new acceptance sample shall be tested on the same day or the following day of production.

ii. When multiple silos are located at one site, mixture supplied to one project is considered as coming from one source for the purpose of applying the “off test” status.

iii. The Engineer may cease supply from the plant when test results from three consecutive samples are not within the JMF tolerances or the test results from two consecutive samples not within the control points indicated in Table M.04.02-1 regardless of production date.

b. JMF revisions

i. If a test indicates that the bitumen content or gradation are outside the tolerances, the Contractor may make a single JMF revision as allowed by the Engineer prior to any additional testing. Consecutive test results outside the requirements of Table M.04.02-1 JMF tolerances may result in rejection of the mixture.

ii. Any modification to the JMF shall not exceed 50% of the JMF tolerances indicated in Table M.04.02-1 for any given component of the mixture without approval of the Engineer. When such an adjustment is made to the bitumen, the corresponding production percentage of bitumen shall be revised accordingly.

iii. Superpave Mix Acceptance:

a. Sampling and Testing Procedures

Production Lot: The Lot will be defined as one of the following types:

- Non-PWL Production Lot for total estimated project quantities per mixture less than 3500 tons: All mixture placed during a single continuous paving operation.
- PWL Production Lot for total estimated project quantities per mixture of 3500 tons or more: Each 3500 tons of mixture produced within 30 calendar days.

Production Sub Lot:

- For Non-PWL: As defined in Table M.04.03 – 2
- For PWL: 500 tons (the last Sub Lot may be less than 500 tons)

Partial Production Lots (For PWL only): A Lot with less than 3500 tons due to:

- completion of the Course
- a Job Mix Formula revision due to changes in:
    - cold feed percentages over 5%
    - target combined gradation over 5%
    - target binder over 0.15%
    - any component specific gravity
- a Lot spanning 30 calendar days

The acceptance sample(s) location(s) shall be selected using stratified – random sampling in accordance with ASTM D 3665 based on:

- the total daily estimated tons of production for non-PWL lots, or
- the total lot size for PWL lots.

One acceptance sample shall be obtained and tested per Sub Lot. The Engineer may direct that additional acceptance samples be obtained. For non-PWL lots, one acceptance test shall always be performed in the last sub-lot based on actual tons of material produced.

For Non-PWL lots, quantities of the same mixture per plant may be combined daily for multiple State projects to determine the number of sub lots.

The payment adjustment will be calculated as described in 4.06.

TABLE M.04.03 – 2:
Superpave Acceptance Testing Frequency per Type/Level/Plant for Non-PWL lots

Daily quantity produced in tons (lot)	Number of Sub Lots/Tests
0 to 150	0, Unless requested by the Engineer
151 to 500	1
501 to 1,000	2
1,001 to 2,000	3
2,001 or greater	1 per 500 tons or portions thereof

The following test procedures shall be used for acceptance:

TABLE M.04.03– 3: Superpave Acceptance Testing Procedures

Protocol	Procedure	Description
1	AASHTO T 168	Sampling of bituminous concrete
2	AASHTO R 47	Reducing samples to testing size
3	AASHTO T 308	Binder content by ignition oven method (adjusted for aggregate correction factor)
4	AASHTO T 30(M)	Gradation of extracted aggregate for bituminous concrete mixture
5	AASHTO T 312	(1)Superpave gyratory molds compacted to N_{des}
6	AASHTO T 166	(2)Bulk specific gravity of bituminous concrete
7	AASHTO R 35	(2)Air voids, VMA
8	AASHTO T 209(M)	Maximum specific gravity of bituminous concrete (average of two tests)
9	AASHTO T 329	Moisture content of bituminous concrete

Notes: **(1)** One set equals two six-inch molds. Molds to be compacted to Nmax for PPTs and to Ndes for production testing. The first sublot of the year will be compacted to N_{max}
(2) Average value of one set of six-inch molds.

If the average ignition oven corrected binder content differs by 0.3% or more from the average of the Plant ticket binder content in five (5) consecutive tests regardless of the production date (moving average), the Contractor shall immediately investigate, determine an assignable cause and correct the issue. When two consecutive moving average differences are 0.3% or more and no assignable cause has been stablished, the Engineer may require a new ignition oven aggregate correction factor to be performed or to adjust the current factor by the average of the differences between the corrected binder content and production Plant ticket for the last five (5) acceptance results.

The test specimen must be placed in an ignition oven for testing in accordance with AASHTO T 308 within thirty minutes of being obtained from the hauling vehicle and the test shall start immediately after.

The Contractor shall perform TSR testing within 30 days after the start of production for all design levels of HMA- and PMA- S0.5 plant-produced mixtures, in accordance with AASHTO T 283(M). The TSR test shall be performed at an AMRL certified laboratory by NETTCP certified technicians. The compacted specimens may be fabricated at the Plant and then tested at an AMRL accredited facility. The test results and specimens shall be submitted to the Engineer for review. Superpave mixtures that require anti-strip additives (either liquid or mineral) shall continue to meet all requirements specified herein for binder and bituminous concrete. The Contractor shall submit the name, manufacturer, percent used, technical datasheet and SDS for the anti-strip additive (if applicable) to the Engineer.

b. Determination of Off-Test Status:

i. Superpave mixes shall be considered *"off test"* when any Control Point Sieve, binder content, VA, VMA, or Gmm value is outside of the limits specified in Table M.04.03-4 or the target binder content at the Plant is below the minimum binder content stated in Table M.04.02-5. Note that further testing of samples or portions of samples not initially tested for this purpose cannot be used to change the status.

ii. Any time the bituminous concrete mixture is considered Off-test:

1. The Contractor shall notify the Engineer when the Plant is *"off test"* for any mix design that is delivered to the project in any production day. When multiple silos are located at one site, mixture supplied to one project is considered as coming from one source for the purpose of applying the *"off test"* determination.

2. The Contractor must take immediate actions to correct the deficiency, minimize *"off test"* production to the project, and obtain an additional Process Control (PC) test after any corrective action to verify production is in conformance to the specifications. A PC test will not be used for acceptance and is solely for the use of the Contractor in its quality control process.

c. Cessation of Supply for Superpave Mixtures in non-PWL lots:

A mixture shall not be used on Department's projects when it is "off test" for:

i. four (4) consecutive tests in any combination of VA, VMA or Gmm, regardless of date of production, or,
ii. two (2) consecutive tests in the Control Point sieves in one production shift.

As a result of cessation of supply, the mix status will be changed to PPT.

d. JMF revisions:

JMF revisions are only permitted prior to or after a production shift. A JMF revision is effective from the time it was submitted and is not retroactive to the previous test(s).

JMF revisions shall be justified by a documented trend of test results.

Revisions to aggregate and RAP specific gravities are only permitted when testing is performed at an AMRL certified laboratory by NETTCP certified technicians.

A JMF revision is required when the Plant target RAP and/or bin percentage deviates by more than 5% and/or the Plant target binder content deviates by more than 0.15% from the active JMF.

TABLE M.04.03– 4: Superpave Mixture Production Requirements

Notes: (1) 300°F minimum after October 15. (2) JMF tolerances shall be defined as the limits for production compliance. (3) For all mixtures with WMA technology, changes to the minimum aggregate temperature will require Engineer's approval. (4) For PMA and mixtures with WMA technology, the mix temperature shall meet manufacturer's recommendations. In addition, for all mixtures with WMA technology, the maximum mix temperature shall not exceed 325°F.(5) 0.4 for PWL lots (6) 1.3 for PWL lots (7) 1.2 for PWL lots

	S0.25		S0.375		S0.5		S1		Tolerances
Sieve	CONTROL POINTS		CONTROL POINTS		CONTROL POINTS		CONTROL POINTS		From JMF Targets (2)
inches	Min(%)	Max(%)	Min(%)	Max(%)	Min(%)	Max(%)	Min(%)	Max(%)	±Tol
1.5	-	-	-	-	-	-	100	-	
1.0	-	-	-	-	-	-	90	100	
3/4	-	-	-	-	100	-	-	90	
1/2	100	-	100	-	90	100	-	-	
3/8	97	100	90	100	-	90	-	-	
#4	75	90	-	75	-	-	-	-	
#8	32	67	32	67	28	58	19	45	
#16	-	-	-	-	-	-	-	-	
#200	2.0	10.0	2.0	10.0	2.0	10.0	1.0	7.0	
Pb	JMF value		JMF value		JMF value		JMF value		0.3(5)
VMA (%)	16.5		16.0		15.0		13.0		1.0(6)
VA (%)	4.0		4.0		4.0		4.0		1.0(7)
Gmm	JMF value		JMF value		JMF value		JMF value		0.030
Agg. Temp (3)	280 – 350F		280 – 350F		280 – 350F		280 – 350F		
Mix Temp (4)	265 – 325 F (1)		265 – 325 F (1)		265 – 325 F (1)		265 – 325 F (1)		
Prod. TSR	N/A		N/A		≥80%		N/A		
T-283 Stripping	N/A		N/A		Minimal as determined by the Engineer		N/A		

TABLE M.04.03– 5:
Superpave Traffic Levels and Design Volumetric Properties

Traffic Level	Design ESALs (million)	Number of Gyrations by Superpave Gyratory Compactor	
		Nini	Ndes
1	< 0.3	6	50
2	0.3 to < 3.0	7	75
3	≥3.0	8	100

TABLE M.04.03-6:
Modifications to Standard AASHTO and ASTM Test Specifications and Procedures

AASHTO Standard Method of Test	
Reference	**Modification**
T 30	Section 7.2 thru 7.4 Samples are not routinely washed for production testing
T 168	Samples are taken at one point in the pile. Samples from a hauling vehicle are taken from only one point instead of three as specified. Selection of Samples: Sampling is equally important as the testing, and the sampler shall use every precaution to obtain samples that are truly representative of the bituminous mixture. Box Samples: In order to enhance the rate of processing samples taken in the field by construction or maintenance personnel the samples will be tested in the order received and data processed to be determine conformance to material specifications and to prioritize inspections by laboratory personnel.
T 195	Section 4.3 only one truck load of mixture is sampled. Samples are taken from opposite sides of the load.
T 209	Section 7.2 The average of two bowls is used proportionally in order to satisfy minimum mass requirements. 8.3 Omit Pycnometer method.
T 283	When foaming technology is used, the material used for the fabrication of the specimens shall be cooled to room temperature, and then reheated to the manufactures recommended compaction temperature prior to fabrication of the specimens.

AASHTO Standard Recommended Practices	
Reference	**Modification**
R 26	All laboratory technician(s) responsible for testing PG-binders be certified or Interim Qualified by the New England Transportation Technician Certification Program (NETTCP) as a PG Asphalt Binder Lab Technician. All laboratories testing binders for the Department are required to be accredited by the AASHTO Materials Reference Laboratory (AMRL). Sources interested in being approved to supply PG-binders to the Department by use of an “in-line blending system,” must record properties of blended material, and additives used. Each source of supply of PG-binder must indicate that the binders contain no additives used to modify or enhance their performance properties. Binders that are manufactured using additives, modifiers, extenders etc., shall disclose the type of additive, percentage and any handling specifications/limitations required. All AASHTO M 320 references shall be replaced with AASHTO M 332. Once a month, one split sample and test results for each asphalt binder grade and each lot shall be submitted by the PG binder supplier to the Department’s Central Lab. Material remaining in a certified lot shall be re-certified no later than 30 days after initial certification. Each April and September, the PG binder supplier shall submit test results for two (2) BBR tests at two (2) different temperatures in accordance with AASHTO R 29.

ON-THE-JOB TRAINING (OJT) WORKFORCE DEVELOPMENT PILOT

Description

To provide construction industry related job opportunities to minorities, women and economically disadvantaged individuals; and to increase the likelihood of a diverse and inclusive workforce on Connecticut Department of Transportation (ConnDOT) projects.

All contractors (existing and newcomers) will be automatically placed in the Workforce Development Pilot. Standard OJT requirements typically associated with individual projects will no longer be applied at the project level for new projects. Instead, these requirements will be applicable on an annual basis for each contractor performing work on ConnDOT projects.

The OJT Workforce Development Pilot will allow a contractor to train employees on Federal, State and privately funded projects located in Connecticut. However, contractors should give priority to training employees on ConnDOT Federal-Aid funded projects.

Funding

The Department will establish an OJT fund annually from which contractors may bill the Department directly for eligible trainee hours. The funds for payment of trainee hours on federal-aid projects will be allocated from the ½ of 1% provided for OJT funding, and will be based on hours trained, not to exceed a maximum of $25,000.00 per year; per contractor.

Minorities and Women

Developing, training and upgrading of minorities, women and economically disadvantaged individuals toward journeyperson level status is the primary objective of this special training provision. Accordingly, the Contractor shall make every effort to enroll minority, women and economically disadvantaged individuals as trainees to the extent that such persons are available within a reasonable area of recruitment. This training commitment is not intended, and shall not be used, to discriminate against any applicant for training whether a member of a minority group or not.

Assigning Training Goals

The Department, through the OJT Program Coordinator, will assign training goals for a calendar year based on the contractor's past two year's activities and the contractor's anticipated upcoming year's activity with the Department. At the beginning of each year, all contractors eligible will be contacted by the Department to determine the number of trainees that will be assigned for the upcoming calendar year. At that time, the Contractor shall enter into an agreement with the Department to provide a self-imposed on-the-job training program for the calendar year. This agreement will include a specific number of annual training goals agreed to by both parties. The number of training assignments may range from one (1) to six (6) per

contractor per calendar year. Each January, a summary of the trainees required and the OJT Workforce Development Pilot package will be sent to participating contractors. The number of trainees assigned to each contractor in the summary will increase proportionately not to exceed 6, as shown in the following table. This package will also be provided to contractors as they become newly eligible for the OJT Workforce Development Pilot throughout the remainder of the year. Projects awarded after September 30 will be included in the following year's Program.

The dollar thresholds for training assignments are as follows:

$4.5 – 8 million=	1 trainee
$ 9 – 15 million=	2 trainees
$16 – 23 million=	3 trainees
$24 – 30 million=	4 trainees
$31 – 40 million=	5 trainees
$41 – and above=	6 trainees

Training Classifications

Preference shall be given to providing training in the following skilled work classifications. However, the classifications established are not all-inclusive:

Equipment Operators	Electricians
Laborers	Painters
Carpenters	Iron / Reinforcing Steel Workers
Concrete Finishers	Mechanics
Pipe Layers	Welders

The Department has on file common training classifications and their respective training requirements; that may be used by the contractors. Contractors shall submit new classifications for specific job functions that their employees are performing. The Department will review and recommend for acceptance the new classifications proposed by contractors, if applicable. New classifications shall meet the following requirements:

Proposed training classifications are reasonable and realistic based on the job skill classification needs, and the number of training hours specified in the training classification is consistent with common practices and provides enough time for the trainee to obtain journeyman level status.

Where feasible, 25% percent of apprentices or trainees in each occupation shall be in their first year of apprenticeship or training. The number of trainees shall be distributed among the work classifications on the basis of the contractor's needs and the availability of journeymen in the various classifications within a reasonable area of recruitment.

No employee shall be employed as a trainee in any classification in which they have successfully completed a training course leading to journeyman level status or in which they have been employed as a journeyman.

Records and Reports

The Contractor shall maintain enrollment in the program and submit all required reports documenting company compliance under these contract requirements. These documents and any other information shall be submitted to the OJT Program Coordinator as requested.

Upon the trainee's completion and graduation from the program, the Contractor shall provide each trainee with a certification Certificate showing the type and length of training satisfactorily completed.

Trainee Interviews

In order to determine the continued effectiveness of the OJT Program in Connecticut, the department will periodically conduct personal interviews with current trainees and may survey recent graduates of the program. This enables the OJT Program Coordinator to modify and improve the program as necessary. Trainee interviews are generally conducted at the job site to ensure that the trainees' work and training is consistent with the approved training program.

Trainee Wages

Contractors shall compensate trainees on a graduating pay scale based upon a percentage of the prevailing minimum journeyman wages (Davis-Bacon Act). Minimum pay shall be as follows:

60 percent	of the journeyman wage for the first half of the training period
75 percent	of the journeyman wage for the third quarter of the training period
90 percent	of the journeyman wage for the last quarter of the training period

In no case, will the trainee be paid less than the prevailing rate for general laborer as shown in the contract wage decision (must be approved by the Department of Labor).

Achieving or Failing to Meet Training Goals

The Contractor will be credited for each trainee currently enrolled or who becomes enrolled in the approved training program and providing they receive the required training under the specific training program. Trainees will be allowed to be transferred between projects if required by the Contractor's schedule and workload. The OJT Program Coordinator must be notified of transfers within five (5) days of the transfer or reassignments by e-mail (Phylisha.Coles@ct.gov).

Where a contractor does not or cannot achieve its annual training goal with female or minority trainees, they must produce adequate Good Faith Efforts documentation. Good Faith Efforts are those designed to achieve equal opportunity through positive, aggressive, and continuous result-oriented measures. 23 CFR § 230.409(g) (4). Contractors should request minorities and females from unions when minorities and females are under-represented in the contractor's workforce.

Whenever a contractor requests ConnDOT approval of someone other than a minority or female, the contractor must submit documented evidence of its Good Faith Efforts to fill that position with a minority or female. When a non-minority male is accepted, a contractor must continue to attempt to meet its remaining annual training goals with females and minorities.

Where a contractor has neither attained its goal nor submitted adequate Good Faith Efforts documentation, ConnDOT will issue a letter of non-compliance. Within thirty (30) days of receiving the letter of non-compliance, the contractor must submit a written Corrective Action Plan (CAP) outlining the steps that it will take to remedy the non-compliance. The CAP must be approved by ConnDOT. Failure to comply with the CAP may result in your firm being found non-responsive for future projects.

Measurement and Payment

Optional reimbursement will be made to the contractor for providing the required training under this special provision on ConnDOT Federal-Aid funded projects only.

Contractor will be reimbursed at $0.80 for each hour of training given to an employee in accordance with an approved training or apprenticeship program. This reimbursement will be made even though the Contractor receives additional training program funds from other sources, provided such other source does not specifically prohibit the contractor from receiving other reimbursement.

Reimbursement for training is made annually or upon the trainees completion and not on a monthly basis. No payment shall be made to the Contractor if either the failure to provide the required training, or the failure to hire the trainee as a journeyperson, is caused by the Contractor.

Program reimbursements will be made directly to the prime contractor on an annual basis. To request reimbursement, prime contractors must complete the Voucher for OJT Workforce Development Pilot Hourly Reimbursement for each trainee in the OJT Program. This form is included in the OJT Workforce Development Pilot package and is available on the Department's web site at:

www.ct.gov/dot

The completed form must be submitted to the Office of Contract Compliance for approval. The form is due on the 15th day of January for each trainee currently enrolled and for hours worked on ConnDOT Federal-Aid funded projects only.

SMALL CONTRACTOR AND SMALL CONTRACTOR MINORITY BUSINESS ENTERPRISES (SET-ASIDE)

March, 2001

NOTE: Certain of the requirements and procedures stated in this "Special Provision" are applicable prior to the execution of the Contract.

I. GENERAL

A. The Contractor shall cooperate with the Connecticut Department of Transportation (CONNDOT) in implementing the required contract obligations concerning "Small Contractor" and "Small Contractor Minority Business Enterprise" use on this Contract in accordance with Section 4a-60g of the Connecticut General Statutes as revised. References, throughout this "Special Provision", to "Small Contractors" are also implied references to "Small Contractor Minority Business Enterprises" as both relate to Section IIA of these provisions. The Contractor shall also cooperate with CONNDOT in reviewing the Contractor's activities relating to this provision. This "Special Provision" is in addition to all other equal opportunity employment requirements of this Contract.

B. For the purpose of this "Special Provision", the "Small Contractor(s)" and "Minority Business Enterprise(s)" named to satisfy the set-aside requirement must be certified by the Department of Administrative Services, Business Connections/ Set-Aside Unit [(860) 713-5236 www.das.state.ct.us/busopp.htm] as a "Small Contractor" and "Minority Business Enterprises" as defined by Section 4a-60g Subsections (1) and (3) of the Connecticut General Statutes as revised and is subject to approval by CONNDOT to do the work for which it is nominated pursuant to the criteria stipulated in Section IIC-3.

C. Contractors who allow work which they have designated for "Small Contractor" participation in the pre-award submission required under Section IIC to be performed by other than the approved "Small Contractor" organization and prior to concurrence by CONNDOT, will not be paid for the value of the work performed by organizations other than the "Small Contractor" designated.

D. If the Contractor is unable to achieve the specified contract goals for "Small Contractor" participation, the Contractor shall submit written documentation to CONNDOT's Manager of Construction Operations indicating his/her good faith efforts to satisfy goal requirements. Documentation is to include but not be limited to the following:

1. A detailed statement of the efforts made to select additional subcontract opportunities for work to be performed by each "Small Contractor" in order to increase the likelihood of achieving the stated goal.

2. A detailed statement, including documentation of the efforts made to contact and solicit contracts with each "Small Contractor", including the names, addresses, dates and telephone numbers of each "Small Contractor" contacted, and a description of the information provided to each "Small Contractor" regarding the scope of services and anticipated time schedule of items proposed to be subcontracted and the nature of response from firms contacted.

3. For each "Small Contractor" that placed a subcontract quotation which the Contractor considered not to be acceptable, provide a detailed statement of the reasons for this conclusion.

4. Documents to support contacts made with CONNDOT requesting assistance in satisfying the contract specified or adjusted "Small Contractor" dollar requirements.

5. Document other special efforts undertaken by the Contractor to meet the defined goal.

E. Failure of the Contractor to have at least the specified dollar amount of this contract performed by "Small Contractor" as required in Section IIA of this "Special Provision" will result in the reduction in contract payment to the Contractor by an amount equivalent to that determined by subtracting from the specific dollar amount required in Section IIA, the dollar payments for the work actually performed by each "Small Contractor". The deficiency in "Small Contractor" achievement, will therefore, be deducted from the final contract payment. However, in instances where the Contractor can adequately document or substantiate its good faith efforts made to meet the specified or adjusted dollar amount to the satisfaction of CONNDOT, no reduction in payments will be imposed.

F. All records must be retained for a period of three (3) years following completion of the contract and shall be available at reasonable times and places for inspection by authorized representatives of CONNDOT.

G. Nothing contained herein, is intended to relieve any contractor or subcontractor or material supplier or manufacturer from compliance with all applicable Federal and State legislation or provisions concerning equal employment opportunity, affirmative action, nondiscrimination and related subjects during the term of this Contract.

II. **SPECIFIC REQUIREMENTS**

In order to increase the participation of "Small Contractors", CONNDOT requires the following:

A. Not less than **25** (%) percent of the **final** value of this Contract shall be subcontracted to and performed by, and/or supplied by, manufactured by and paid to "Small Contractors" and/or "Small Contractors Minority Business Enterprises".

If the above percentage is zero (0%) AND an asterisk (*) has been entered in the adjacent brackets [ ], this Contract is 100% solely set-aside for participation by "Small Contractors" and/or "Small Contractors Minority Business Enterprises".

B. The Contractor shall assure that each "Small Contractor" will have an equitable opportunity to compete under this "Special Provision", particularly by arranging solicitations, time for the preparation of Quotes, Scope of Work, and Delivery Schedules so as to facilitate the participation of each "Small Contractor".

C. The Contractor shall provide to CONNDOT's Manager of Contracts within Seven (7) days after the bid opening the following items:

1. An affidavit (Exhibit I) completed by each named "Small Contractor" subcontractor listing a description of the work and indicating the dollar amount of all contract(s) and/or subcontract(s) that have been awarded to him/her for the current State Fiscal Year (July 1 - June 30) does not exceed the Fiscal Year limit of $10,000,000.00.

2. A certification of work to be subcontracted (Exhibit II) signed by both the Contractor and the "Small Contractor" listing the work items and the dollar value of the items that the nominated "Small Contractor" is to perform on the project to achieve the minimum percentage indicated in Section IIA above.

3. A certification of past experience (Exhibit III) indicating the scope of work the nominated "Small Contractor" has performed on all projects, public and private, for the past two (2) years.

4. In instances where a change from the originally approved named "Small Contractor" (see Section IB) is proposed, the Contractor is required to submit, in a reasonable and expeditious manner, a revised submission, comprised of the documentation required in Section IIC, Paragraphs 1, 2 and 3 and Section E together with documentation to substantiate and justify the change, (i.e., documentation to provide a basis for the change)

to CONNDOT's Manager of Construction Operations for its review and approval prior to the implementation of the change. The Contractor must demonstrate that the originally named "Small Contractor" is unable to perform in conformity to specifications, or unwilling to perform, or is in default of its contract, or is overextended on other jobs. The Contractor's ability to negotiate a more advantageous contract with another "Small Contractor" is not a valid basis for change. Documentation shall include a letter of release from the originally named "Small Contractor" indicating the reason(s) for the release.

D. After the Contractor signs the Contract, the Contractor will be required to meet with CONNDOT's Manager of Construction Operations or his/her designee to review the following:

1. What is expected with respect to the "Small Contractor" set aside requirements.

2. Failure to comply with and meet the requirement can and will result in monetary deductions from payment.

3. Each quarter after the start of the "Small Contractor" the Contractor shall submit a report to CONNDOT's Manager of Construction Operations indicating the work done by, and the dollars paid to each "Small Contractor" to date.

4. What is required when a request to sublet to a "Small Contractor" is submitted.

E. The Contractor shall submit to CONNDOT's Manager of Construction Operations all requests for subcontractor approvals on standard forms provided by the Department.

If the request for approval is for a "Small Contractor" subcontractor for the purpose of meeting the contract required "Small Contractor" percentage stipulated in Section IIA, a copy of the legal contract between the Contractor and the "Small Contractor" subcontractor must also be submitted at the same time. Any subsequent amendments or modifications of the contract between the Contractor and the "Small Contractor" subcontractor must also be submitted to CONNDOT's Manager of Construction Operations with an explanation of the change(s). The contract must show items of work to be performed, unit prices and, if a partial item, the work involved by both parties.

In addition, the following documents are to be attached:

(1) A statement explaining any method or arrangement for renting equipment. If rental is from a Contractor, a copy of Rental Agreement must be submitted.

(2) A statement addressing any special arrangements for manpower.

(3) A statement addressing who will purchase material.

F. Contractors subcontracting with a "Small Contractor" to perform work or services as required by this "Special Provision" shall not terminate such firms without advising CONNDOT, in writing, and providing adequate documentation to substantiate the reasons for termination if the designated "Small Contractor" firm has not started or completed the work or the services for which it has been contracted to perform.

G. Material Suppliers or Manufacturers

If the Contractor elects to utilize a "Small Contractor" supplier or manufacturer to satisfy a portion or all of the specified dollar requirements, the Contractor must provide the Department with:

1. An executed Affidavit Small Contractor (Set-Aside) Connecticut Department of Transportation Affidavit Supplier or Manufacturer (sample attached), and

2. Substantiation of payments made to the supplier or manufacturer for materials used on the project.

Brokers and packagers shall not be regarded as material Suppliers or manufacturer.

H. Non-Manufacturing or Non-Supplier "Small Contractor" Credit

Contractors may count towards its "Small Contractor" goals the following expenditures with "Small Contractor" firms that are not manufacturers or suppliers:

1. Reasonable fees or commissions charged for providing a bona fide service such as professional, technical, consultant or managerial services and assistance in the procurement of essential personnel, facilities, equipment, material or supplies necessary for the performance of the contract provided that the fee or commission is determined by the Department of Transportation to be reasonable and consistent with fees customarily allowed for similar services.

2. The fees charged for delivery of materials and supplies required on a job site (but not the cost of the materials and supplies themselves) when the hauler, trucker, or delivery service is not also the manufacturer of or a regular dealer in the materials and supplies, provided that the fee is determined by the Department of Transportation to be reasonable and not excessive as compared with fees customarily allowed for similar services.

3. The fees or commissions charged for providing any bonds or insurance specifically required for the performance of the Contract, provided that the fee or commission is determined by the Department of Transportation to be reasonable and not excessive as compared with fees customarily allowed for similar services.

III. **BROKERING**

For the purpose of this "Special Provision", a "Broker" is one who acts as an agent for others in negotiating contracts, purchases, sales, etc., in return for a fee or commission. Brokering of work by a "Small Contractor" is not allowed and is a contract violation.

IV. **PRE-AWARD WAIVERS:**

If the Contractor's submission of the "Small Contractor" listing, as required by Section IIC indicates that it is unable, by subcontracting to obtain commitments which at least equal the amount required by Section IIA, it may request, in writing, a waiver of up to 50% of the amount required by Section IIA. To obtain such a waiver, the Contractor must submit a completed "Application for Waiver of Small Contractor Minority Business Enterprise Goals" to CONNDOT's Manager of Contracts which must also contain the following documentation:

1. Information described in Section ID.

2. For each "Small Contractor" contacted but unavailable, a statement from each "Small Contractor" confirming its unavailability.

Upon receipt of the submission requesting a waiver, the CONNDOT's Manager of Contracts shall submit the documentation to the Director of the Office of Contract Compliance who shall review it for completeness. After completion of the Director of Contract Compliance's review, she/he should write a narrative of his/her findings of the application for a waiver, which is to include his/her recommendation. The Director of Contract Compliance shall submit the written narrative to the Chairperson of the DBE Screening Committee at least five (5) working days before the scheduled meeting. The Contractor shall be invited to attend the meeting and present his/her position. The DBE Screening Committee shall render a decision on the waiver request within five (5) working days after the meeting. The DBE Screening Committee's decision shall be final. Waiver applications are available from the CONNDOT Manager of Contracts.

EXHIBIT I Mar. 01

SMALL CONTRACTOR/*MINORITY BUSINESS ENTERPRISE
(* Delete if not Applicable)
SET-ASIDE PROGRAM
(QUALIFICATION AFFIDAVIT)

PROJECT(s) _____
(INCLUDING TOWN & DESCRIPTION)

STATE OF _____CONNECTICUT_____

COUNTY OF_____

I_____,ACTING IN BEHALF
NAME OF PARTY SIGNING AFFIDAVIT
OF_____,DO HEREBY CERTIFY
PERSON FIRM OR ORGANIZATION
AND AFFIRM THAT THE INFORMATION SET FORTH BELOW IS TRUE AND ACCURATE TO THE BEST OF MY KNOWLEDGE. AS OF THIS DATE_____THE LIST OF SMALL CONTRACTOR SET-ASIDE PROGRAM - CONTRACTS AND/OR SUBCONTRACTS AWARDED DURING THE CURRENT FISCAL YEAR (JULY 1 - JUNE 30) 20_____ IS AS FOLLOWS:

Col. 1 TOWN AND PROJECT NUMBER	Col. 2 STATE AGENCY WHICH AWARDED CONTRACT	Col. 3 CONTRACT AMOUNT AWARDED UNDER THIS PROGRAM	Col. 4 AMOUNT OF WORK SUBCONTRACTED FROM OTHER FIRMS UNDER THIS PROGRAM	Col. 5 TOTAL AMOUNT OF ALL WORK UNDER THIS PROGRAM Col. 3 Plus Col. 4
	TOTALS	$	$	$

_____
NAME OF PERSON, FIRM OR ORGANIZATION

(FIRM SEAL)

_____
SIGNATURE & TITLE OF OFFICIAL

SWORN TO AND SUBSCRIBED BEFORE ME BY_____

WHO IS PERSONALLY KNOWN TO ME, THIS_____DAY OF_____, 20_____

_____
(NOTARY PUBLIC)

MY COMMISSION EXPIRES_____SEAL

PLEASE NOTE THAT ALL THE WORK AWARDED OR SUBCONTRACTED TO YOUR FIRM UNDER THE SET-ASIDE PROGRAM IN A FISCAL YEAR (JULY 1-JUNE 30) INCLUDING THIS PROJECT, CANNOT BE MORE THAN $10,000,000.00

Mar.01

EXHIBIT II

DEPARTMENT OF TRANSPORTATION
CONTRACT DIVISION
2800 BERLIN TURNPIKE
NEWINGTON, CT 06111

CERTIFICATION OF WORK TO BE SUBCONTRACTED
NOMINATED SMALL CONTRACTOR/*MINORITY BUSINESS ENTERPRISE

* Delete if not applicable

PLEASE INCLUDE A COPY OF CERTIFICATION LETTER

CONTRACTOR_____

ADDRESS_____

TOWN_____PROJECT NO._____

DESCRIPTION OF PROJECT_____

_____

CONTRACT BID AMOUNT $_____

DATE_____

Listed below is the Nominated Small Contractor/Minority Business Enterprise for the above project and the requested data:

Name, Address & Tel No. of the Nominated Firm	ITEM(s)NUMBER(s) and Description of the Item(s) to be performed by and paid to the Subcontractor	Quantities (indicate if partial)	Prime's Bid Amount For Item	Dollar Amount Subcontracted	Small Business Set-Aside Dollar Requirement

Signed By _____
Small Contractor/*Minority Business Enterprise
(Subcontractor)

Signed By_____
Contractor

Title_____

EXHIBIT III

Mar.01

CERTIFICATION
PAST CONSTRUCTION EXPERIENCE

SMALL CONTRACTOR / * MINORITY BUSINESS ENTERPRISES

* Delete if not applicable

PLEASE LIST ALL CONSTRUCTION PROJECTS YOUR ORGANIZATION HAS WORKED ON IN THE PAST TWO FISCAL YEARS

PROJECT LOCATION NUMBER AND DESCRIPTION APPLICABLE	CONTRACT AMOUNT	IF WORK PERFORMED AS PRIME GIVE OWNERS NAME IF WORK PERFORMED AS SUBCONTRACTOR GIVE CONTRACTORS NAME	START DATE	ACTUAL OR ESTIMATED COMPLETION DATE	NAME AND PHONE OF OWNER OR PRIME CONTRACTOR AS

SIGNED BY: _____

SMALL BUSINESS CONTRACTOR
*MINORITY BUSINESS ENTERPRISES

D.O.T. PROJECT NO. _____

* Delete if not applicable

MARCH, 2001

SMALL CONTRACTOR/SMALL CONTRACTOR MINORITY BUSINESS ENTERPRISE (MBE) (SET-ASIDE) CONNECTICUT DEPARTMENT OF TRANSPORTATION AFFIDAVIT – SUPPLIER OR MANUFACTURER

This affidavit must be completed by the State Contractor's designated Small Contractor/ Small Contractor Minority Business Enterprise (MBE), notarized and attached to the contractor's request to utilize a Small Contractor/Small Contractor Minority Business Enterprise (MBE) supplier or manufacturer as a credit towards its Small Contractor/Small Contractor Minority Business Enterprise (MBE) contract requirement; failure to do so will result in not receiving credit towards the contract Small Contractor/Small Contractor Minority Business Enterprise (MBE) requirement.

State Project No. _____
Federal Aid Project No. _____
Description of Project _____

I, _____, acting in behalf of _____
(Name of person signing Affidavit) (Small Contractor/Small Contractor MBE contractor person,
_____ of which I am the_____ affirm that _____
firm, association or certify and corporation) (Title of Person) (Small
_____is a certified Small Contractor/Small
Contractor/Small Contractor MBE person, firm, association or corporation)
Contractor Minority Business Enterprise, as defined by Section 4a-60g of the Connecticut General Statutes, as revised.

I further certify and affirm that _____
(Small Contractor/Small Contractor MBE person, firm, association or corporation)
will assume the actual and contractual responsibility for the provision of the materials and/or supplies sought by _____. If a manufacturer, I produce goods from raw
(State Contractor)
materials or substantially alter them before resale, or if a supplier, I perform a commercially useful function in the supply process.

I understand that false statements made herein are punishable at Law (Sec. 53a-157, CGS, as revised).

_____
(Name of Small Contractor/Small Contractor MBE person, firm, association or corporation)

_____
(Signature and Title of Official making the Affidavit)

Subscribed and sworn to before me, the _____ day of _____ 200____.

_____
Notary Public (Commissioner of the Superior Court)

My Commission Expires _____

CERTIFICATE OF CORPORATION

I, _____, certify that I am the _____ (Official) of the Corporation named in the foregoing instrument; that I have been duly authorized to affix the seal of the Corporation to such papers as require the seal; that _____, who signed said instrument on behalf of the Corporation, was then _____ of said corporation; that said instrument was duly signed for and in behalf of said Corporation by authority of its governing body and is within the scope of its corporation powers.

_____

(Signature of Person Certifying) (Date)

(Corporate Seal)

ITEM #0100072A - REMOVAL AND DISPOSAL OF UNDERGROUND TANKS

Description:

Work under this item shall include all activities related to the excavation, removal and disposal of the underground storage tanks (USTs) and their associated equipment and piping as shown on the Contract Plans at the Litchfield Maintenance Facility. Specifically, the project includes the removal and disposal of a 4,000-gallon gasoline UST, a 6,000-gallon diesel fuel UST, a 2,000-gallon fuel oil UST, and a 1,000-gallon oil/water separator. The work shall be performed by an experienced firm that has successfully completed UST excavation, removal and disposal work similar to that indicated herein.

All activities shall be performed in accordance with USEPA 40 CFR Parts 260-268, 280 and 281, OSHA 29 CFR 1926, OSHA 29 CFR 1910.120, CTDEEP 22a-449(d)-1 and 22a-449(c), NFPA 30, NFPA 327, API 1604, API 2015, and all other applicable state and federal regulations and codes.

Materials:

Backfill material shall conform to the requirements of Section 2.13 of the Specifications.

Construction Methods:

(1) Pre-Excavation and Removal Submittals:

(a) At least fifteen (15) working days prior to the start of any excavation, removal and disposal work, the Contractor shall submit the following to the Engineer for review and approval:

1. Proposed excavation and removal procedures to be utilized, including UST vapor purging and atmosphere testing.
2. Proposed protective/safety measures to be implemented.
3. Proposed C&D bulky waste disposal facility.
4. Proposed steel/scrap metal recycling facility.

(b) The Contractor shall notify the Department's UST Class A/B Operator, currently David Hartley, ConnDOT Office of Properties and Facilities, via email (David.Hartley@ct.gov) **45 days prior to the projected date** of the UST removal(s).

(c) Seventy-two (72) hours prior to the start of any excavation/removal activity, the Contractor shall notify the following:

- Office of the State Fire Marshal, Fire and Life Safety Specialist.
- Town of Litchfield Fire Marshal.

Prior to the start of on-site activity, the Contractor shall provide the Engineer with written confirmation that the above contacts have been appropriately notified.

(2) General Provisions:

The Contractor shall clean (removal of sludges and residuals), remove and dispose of: one 4,000-gallon gasoline UST, one 6,000-gallon diesel fuel UST, one 2,000-gallon fuel oil UST and one 1,000-gallon oil/water separator located at the Litchfield Maintenance Facility, 438 Bantam Road in Litchfield, Connecticut.

Removal and disposal shall include the removal of all appurtenances associated with the tanks (manways, fuel piping, vent piping, conduits, tank and piping monitoring devices, etc.). Removal shall also include all necessary vapor purging, defuming, cleaning, etc.

In addition, the removal of the oil/water separator UST shall include cleaning/pressure-washing of the floor drains and sediment traps associated with the tank to remove all residual sediment and grease prior to its removal.

Disposal of petroleum products, waters and sediments from within the tanks, piping structures, floor drains and sediment traps shall be performed by the Contractor in accordance with Item 0101143A – Handling and Disposal of Regulated Items.

The Contractor shall exercise all necessary precautions for fire prevention. Acceptable fire extinguishers shall be made available at all times. Flame/torch cutting is prohibited.

The Contractor shall prevent damage to any existing utilities, structures, equipment and appurtenances that are to remain in service.

(3) Vapor Purging:

After removing any liquid product, the vapor remaining in the UST shall be displaced by adding solid carbon dioxide (dry ice) to the tank in the amount of at least 0.25 ounces per gallon of tank capacity. The dry ice shall be crushed and distributed evenly over the greatest possible area in the tank to promote rapid evaporation. With the exception of the tank vent, the Contractor shall plug as many tank openings as possible after introducing the dry ice. As the dry ice evaporates, flammable vapors will flow out of the tank and may surround the area. Therefore, the Contractor shall conduct air monitoring around the tank as indicated below. All dry ice must evaporate before proceeding with UST excavation and removal. Alternate vapor purging methods will not be permitted without prior approval from the Engineer.

(4) Atmosphere Testing:

The atmosphere inside the UST and around the excavation area shall be regularly tested by the Contractor for flammable or combustible vapor concentrations until the tank is removed from both the excavation area and the site. Such tests are to be made with a combustible gas indicator provided by the Contractor which is properly calibrated and maintained according to the manufacturer's instructions. Contractor personnel responsible for testing must be completely familiar with the use of the instrument and the interpretation of the instrument's readings.

The atmosphere inside the UST shall be tested by placing the combustible gas indicator probe into the fill opening after the drop tube has been removed. If the tank is equipped with a non-removable fill tube, readings shall be taken through another suitable opening. Readings shall be taken at the bottom, middle and upper portions of the tank, and the instrument shall be cleared after each reading. Liquid product must not enter the probe. All readings must be 20 percent or less of the lower explosive limit (LEL) before the tank is considered safe for removal from the ground. The Contractor shall also use an oxygen indicator to monitor the oxygen concentration in the tank(s).

(5) Excavation and Removal Provisions:

Excavation and removal practices shall be acceptable to the Engineer, shall ensure the safety of persons, equipment and structures that are to remain, and shall provide adequate protection of the environment. The Contractor shall schedule excavation and removal activities to minimize delays and construction traffic on-site.

The Contractor shall furnish and employ such shores, braces, pumps, etc., as may be necessary for the protection of property, proper completion of the work and the safety of the public and employees of the Contractor and the Department.

Excavation by machinery shall be discontinued when excavation approaches pipes, conduits or other underground structures. The work shall be completed in these areas by use of hand tools.

The Contractor shall excavate test pits when necessary to determine the exact location of tank(s), pipe(s) or other underground structure.

For structures not scheduled for demolition, any holes resulting from the removal of vent pipe brackets, return and supply pipes, or other conduits removed or abandoned as a part of excavation and removal activities shall be plugged with cement masonry.

The Contractor shall saw cut pavement in a neat and workman-like manner anywhere partial pavement removal is necessary to complete the work.

The Contractor shall prevent surface waters from entering the tank excavation area(s) at all times.

The Contractor shall assist in tank grave confirmation sampling by providing equipment and an operator to collect excavation bottom and side-wall soil. After collection of samples, the Contractor shall allow the excavations to remain open pending the receipt of laboratory analytical results by the Engineer. The Contractor shall backfill the excavations immediately upon notification in writing by the Engineer. Any additional excavation beyond that necessary for UST removal shall be as directed by the Engineer. Any tank grave that cannot be backfilled before the end of the work day shall be adequately protected by the Contractor. This includes the use of safety fencing or other appropriate barricade to prevent individuals or vehicles from falling into excavations, orange flashing hazard lighting along the fencing, or other lighting considered necessary by the Engineer.

Excavation areas (tank grave areas, piping removal areas, soil removal areas, etc.) shall be backfilled to grade with surplus suitable excavated "clean fill" materials from the project. Any additional fill material required to bring the subsurface area to grade shall conform to Article 2.13 of the Standard Specifications. Prior to placement of fill materials, areas to be filled shall be free of standing water, frost, frozen material, trash and debris.

After fill placement and compaction, the Contractor shall grade surface to meet adjacent contours and provide flow to surface drainage structures. Grading shall not create any depressions that can retain water, create any diversions to surface flow, or block the intended flow of surface water.

For excavations conducted in areas where asphalt was cut/removed to facilitate access to the UST, the Contractor shall restore the paved surfaces to equal or better quality than before disturbance. All pavement markings disturbed during construction shall be restored.

(6) Disposal Procedures:

Scrap metal (tanks, piping, etc) generated during the demolition process shall be recycled as scrap metal at an approved scrap metal recycling facility following cleaning.

Non-hazardous, non-metallic waste shall be recycled off-site or disposed of at a landfill. The Contractor shall transport materials, including but not limited to concrete and asphalt, removed from excavated USTs, and dispose/recycle off-site as C&D bulky waste in accordance with the Connecticut Department of Energy and Environmental Protection (CTDEEP) solid waste management standards. The Contractor shall recycle as much C&D bulky waste as practical.

Excavated underground items shall not be reused or salvaged by the Contractor.

(7) Post-Excavation and Removal Submittals:

The Contractor shall provide the Engineer, within 30 days of completion of the excavation and removal work, a compliance package, which shall include, but not be limited to, the following:

1. Shipping papers from the approved solid waste bulky waste disposal/recycling facility indicating receipt and acceptance of C&D bulky waste debris.

2. Shipping papers and Certificates of Destruction/Recycling from the approved scrap metal recycling facility indicating receipt and acceptance of scrap metal debris (tank, piping, etc).

Method of Measurement:

This item will be paid for at the contract lump sum price for "Removal and Disposal of Underground Tanks" complete. Materials associated with the excavation, removal and disposal of the UST, such as permits, equipment, disposal, etc., will not be measured for payment.

Basis of Payment:

The Contract price lump sum shall include all related necessary work and material associated with the excavation, removal and disposal of the USTs, including but not limited to, permits, equipment, material recycling and disposal, air monitoring, backfill, fencing, barricades, and lighting. No additional payment will be made for shoring, bracing, pumping, bailing, or for material or equipment necessary for the satisfactory completion of the work.

Removal and disposal of residual liquid product from the USTs will be in accordance with Item 0101143A – Handling and Disposal of Regulated Items.

Pay Item	Pay Unit
Removal and Disposal of Underground Tanks	LS

ITEM #0101000A - ENVIRONMENTAL HEALTH AND SAFETY

Description

Under this item, the Contractor shall establish protocols and provide procedures to protect the health and safety of its employees and subcontractors as related to the proposed construction activities performed within the Project Area. Work under this Item consists of the development and implementation of a written Health and Safety Plan (HASP) that addresses the relative risk of exposure to potential hazards associated with working around current and historic tank graves that will be encountered as part of this Project, including those related to cleaning and removal of gasoline, diesel fuel, fuel oil and oil/water separator tanks, possible entry into confined spaces or excavations with the potential for vapors to accumulate, handling of contaminated soil, and exposure to an oxygen releasing reagent (oxidizer). The HASP shall establish health and safety protocols that address the relative risk of exposure to regulated substances in accordance with 29 CFR 1910.120 and 29 CFR 1926.65. Such protocols shall only address those potential concerns directly related to site conditions.

Note: The Engineer will prepare a site-specific HASP, which is compatible with the Contractor's HASP, and will be responsible for the health and safety of all Project Inspectors, Department employees and consulting engineers.

Materials

The Contractor must provide chemical protective clothing (CPC) and personal protective equipment (PPE) as stipulated in the Contractor's HASP during the performance of work in areas identified as potentially posing a risk to worker health and safety, for workers employed by the Contractor and all subcontractors.

Construction Methods

A. Existing Information

The Contractor shall utilize all available information and existing records and data pertaining to chemical and physical hazards associated with any of the regulated substances identified in the environmental site investigations to develop the HASP. The documents containing this data are referenced in "Notice to Contractor – Environmental Investigations." Note that the entire Project Area has been designated an Area of Environmental Concern. As indicated in the Notice to Contractor for this project, the chemical data obtained during a 2008 subsurface investigations and most-recent supplemental subsurface investigation, indicates volatile organic compounds (VOCs) and extractable total petroleum hydrocarbons (ETPH) impacts to the soil and groundwater within the Project limits. The detected concentrations of these constituents in the soil and groundwater were above their respective, applicable Connecticut Remediation Standard Regulations (RSRs) criteria.

Additionally, as indicated in the "Notice to Contractor – Environmental Investigations" and in the Project Plans and Specifications, the Project includes the excavation of impacted soil and application of a soil amendment consisting of an oxidizing releasing reagent. The Contractor's HASP shall incorporate health and safety analyses and measures appropriate for completing the soil amendment work. Such measures shall be compatible with the selected amendment product.

B. General

The requirements set forth herein pertain to the provision of workers' health and safety as it relates to proposed Project activities when performed in the presence of hazardous or regulated materials or otherwise environmentally sensitive conditions. THE PROVISION OF WORKER HEALTH AND SAFETY PROTOCOLS, WHICH ADDRESS POTENTIAL AND/OR ACTUAL RISK OF EXPOSURE TO SITE SPECIFIC HAZARDS POSED TO CONTRACTOR EMPLOYEES, IS SOLELY THE RESPONSIBILITY OF THE CONTRACTOR.

The Contractor shall be responsible for the development, implementation and oversight of the HASP throughout the performance of work within the limits of the AOEC, as identified in the Contract Documents, and in other areas identified by the Engineer or by the HASP where site conditions may pose a risk to worker health and safety and/or the environment. **No physical aspects of the work within the AOEC shall begin until the HASP is reviewed by the Engineer and is determined to meet the requirements of the specifications. However, the Contract time, in accordance with Article 1.03.08, will begin on the date stipulated in the Notice to Proceed.**

C. Regulatory Requirements

All construction related activities performed by the Contractor within the limits of the AOEC or in other areas where site conditions may pose a risk to worker health and safety and/or the environment shall be performed in conformance with 29 CFR 1926, Safety and Health Regulations for Construction and 29 CFR 1910, Safety and Health Regulations for General Industry. Conformance to 29 CFR 1910.120, Hazardous Waste Site Operations and Emergency Response (HAZWOPER) may also be required, where appropriate.

D. Submittals

Three copies of the HASP shall be submitted to the Engineer within four (4) weeks after the Award of Contract or four (4) weeks prior to the start of any work in the AOEC, whichever is first, but not before the Award of the Contract.

The HASP shall be developed by a qualified person designated by the Contractor. This qualified person shall be a Certified Industrial Hygienist (CIH), Certified Hazardous Material

Manager (CHMM), or a Certified Safety Professional (CSP). He/she shall have review and approval authority over the HASP and be identified as the Health and Safety Manager (HSM). The HASP shall bear the signature of said HSM indicating that the HASP meets the minimum requirements of 29 CFR 1910.120 and 29 CFR 1926.65.

The Engineer will review the HASP within four (4) weeks of submittal and provide written comments as to deficiencies in and/or exceptions to the plan, if any, to assure consistency with the specifications, applicable standards, policies and practices and appropriateness given potential or known site conditions. Items identified in the HASP which do not conform to the specifications will be brought to the attention of the Contractor, and the Contractor shall revise the HASP to correct the deficiencies and resubmit it to the Engineer for determination of compliance with this Item. The Contractor shall not be allowed to commence work activities in the AOEC, as shown on the Plans, or where site conditions exist which may pose a risk to worker health and safety and/or the environment, until the HASP has been reviewed and determined to conform to the requirements of this specification by the Engineer. **No claim for delay in the progress of work will be considered for the Contractor's failure to submit a HASP that conforms to the requirements of the Contract.**

E. HASP Provisions

1. General Requirements

The Contractor shall prepare a HASP covering all Project site work regulated by 29 CFR 1910.120(b)/1926.65(b) to be performed by the Contractor and all subcontractors under this Contract. The HASP shall establish in detail, the protocols necessary for the recognition, evaluation, and control of all hazards associated with each task performed under this Contract. The HASP shall address site-specific safety and health hazards of each phase of site operation and include the requirements and procedures for employee protection. The level of detail provided in the HASP shall be tailored to the type of work, complexity of operations to be performed, and hazards anticipated. Details about some activities may not be available when the initial HASP is prepared and submitted. Therefore, the HASP shall address, in as much detail as possible, all anticipated tasks, their related hazards and anticipated control measures.

The HASP shall interface with the Contractor's Safety and Health Program. Any portions of the Safety and Health Program that are referenced in the HASP shall be included as appendices to the HASP. All topics regulated by the 29 CFR 1910.120(b) (4) and those listed below shall be addressed in the HASP. **Where the use of a specific topic is not applicable to the Project, the HASP shall include a statement to justify its omission or reduced level of detail and establish that adequate consideration was given to that topic.**

2. Elements

a. Site Description and Contamination Characterization

The Contractor shall provide a site description and contaminant characterization in the HASP that meets the requirements of 29 CFR 1910.120/1926.65.

b. Safety and Health Risk Analysis/Activity Hazard Analysis

The HASP shall address the safety and health hazards on this site for every operation to be performed. The Contractor shall review existing records and data to identify potential chemical and physical hazards associated with the site and shall evaluate their impact on field operations. Sources, concentrations (if known), potential exposure pathways, and other factors as noted in CFR 1910.120/126.65, paragraph (c)(7) employed to assess risk shall be described. The Contractor shall develop and justify action levels for implementation of engineering controls and personal protective equipment upgrades and downgrades for controlling worker exposure to the identified hazards. If there is no permissible exposure limit (PEL) or published exposure level for an identified hazard, available information from other published studies may be used as guidance. Any modification of an established PEL must be fully documented.

The HASP shall include a comprehensive section that discusses the tasks and objectives of the site operations and logistics and resources required to complete each task. The hazards associated with each task shall be identified. Hazard prevention techniques, procedures and/or equipment shall be identified to mitigate each of the hazards identified.

c. Staff Organization, Qualifications and Responsibilities

The HASP shall include a list of personnel expected to be engaged in site activities and certify that said personnel have completed the educational requirements stipulated in 29 CFR 1910.120 and 29 CFR 1926.65, are currently monitored under a medical surveillance program in compliance with those regulations, and that they are fit for work under “Level C” conditions.

The Contractor shall assign responsibilities for safety activities and procedures. An outline or flow chart of the safety chain of command shall be provided in the HASP. Qualifications, including education, experience, certifications, and training in safety and health for all personnel engaged in safety and health functions shall be documented in the HASP. Specific duties of each on-site team member should be identified. Typical team members include, but are not limited to, Team Leader, Scientific Advisor, Site Safety Officer, Public Information Officer, Security Officer, Record Keeper, Financial Officer, Field Team Leader, and Field Team members.

The HASP shall also include the name and qualifications of the individual proposed to serve as Health and Safety Officer (HSO). The HSO shall have full authority to carry out and ensure compliance with the HASP. The Contractor shall provide a competent HSO on-site who is capable of identifying existing and potential hazards in the surroundings or working conditions which are unsanitary, hazardous or dangerous to employees and who has authorization to take prompt corrective measures to eliminate or control them. The qualifications of the HSO shall include completion of OSHA 40-hour HAZWOPER training, including current 8-hour refresher training, and 8-hour HAZWOPER supervisory training; a minimum of one year of working experience with the regulated compounds that have been documented to exist within Project limits; a working knowledge of federal and state safety regulations; specialized training or documented experience (one year minimum) in personal and respiratory protective equipment program implementation; the proper use of air monitoring instruments, air sampling methods and procedures; and certification training in first aid and CPR by a recognized, approved organization such as the American Red Cross.

The primary duties of the HSO shall be those associated with worker health and safety. The Contractor's HSO responsibilities shall be detailed in the written HASP and shall include, but not be limited to, the following:

i. Directing and implementing the HASP;

ii. Ensuring that all Project personnel have been adequately trained in the recognition and avoidance of unsafe conditions and the regulations applicable to the work environment to control or eliminate any hazards or other exposure to illness or injury (29 CFR 1926.21). All personnel shall be adequately trained in procedures outlined in the Contractor's written HASP;

iii. Authorizing Stop Work Orders, which shall be executed upon the determination of an imminent health and safety concern;

iv. Contacting the Contractor's HSM and the Engineer immediately upon the issuance of a Stop Work order when the HSO has made the determination of an imminent health and safety concern;

v. Authorizing work to resume, upon approval from the Contractor's HSM;

vi. Directing activities, as defined in the Contractor's written HASP, during emergency situations; and

vii. Providing personal monitoring where applicable, and as identified in the HASP.
viii.

d. Employee Training Assignments

The Contractor shall develop a training program to inform employees, supplier's representatives, and official visitors of the special hazards and procedures (including PPE, its uses and inspections) to control these hazards during field operations. Official visitors include, but are not limited to, Federal Agency Representatives, State Agency Representatives, Municipal Agency Representatives, Contractors, subcontractors, etc. This program shall be consistent with the requirements of 29 CFR 1910.120 and 29 CFR 1926.65.

e. Personal Protective Equipment

The HASP shall include the requirements and procedures for employee protection and should include a detailed section on respiratory protection. The Contractor shall describe in detail and provide appropriate PPE to insure that workers are not exposed to levels greater than the action level for identified hazards for each operation stated for each work zone. The level of protection shall be specific for each operation and shall be in compliance with all requirements of 29 CFR 1910 and 29 CFR 1926. The Contractor shall provide, maintain, and properly dispose of all PPE.

f. Medical Surveillance Program

All on-site Contractor personnel engaged in 29 CFR 1910.120/1926.65 operations shall have medical examinations meeting the requirements of 29 CFR 1910.120(f) prior to commencement of work.

The HASP shall include certification of medical evaluation and clearance by the physician for each employee engaged in 29 CFR 1910.120/1926.65 operations at the site.

g. Exposure Monitoring/Air Sampling Program

The Contractor shall submit an Air Monitoring Plan as part of the HASP, which is consistent with 29 CFR 1910.120, paragraphs (b)(4)(ii)(E), (c)(6), and (h). The Contractor shall identify specific air sampling equipment, locations, and frequencies in the air-monitoring plan. Air and exposure monitoring requirements shall be specified in the Contractor's HASP. The Contractor's designated certified safety professional (e.g., CIH, CHMM, CSP) shall specify exposure monitoring/air sampling requirements after a careful review of the contaminants of concern and planned site activities.

h. Site Layout and Control

The HASP shall include a map showing work zone delineation (support, contamination, reduction and exclusion), on/off-site communications, site access controls, and security (physical).

i. Communications

Written procedures for routine and emergency communications procedures shall be included in the Contractor's HASP.

j. Personal Hygiene, Personal Decontamination and Equipment Decontamination

Decontamination facilities and procedures for PPE, sampling equipment, and heavy equipment shall be discussed in detail in the HASP.

k. Emergency Equipment and First Aid Requirements

The Contractor shall provide appropriate emergency first aid kits and equipment suitable to treat exposure to the hazards identified, including chemical agents. The Contractor will provide personnel that have certified first aid/CPR training on-site at all times during site operations.

l. Emergency Response Plan and Spill Containment Program

The Contractor shall establish procedures in order to take emergency action in the event of immediate hazards (i.e., a chemical agent leak or spill, fire or personal injury). Personnel and facilities supplying support in emergency procedures will be identified. The emergency equipment to be present on-site and the Emergency Response Plan procedures, as required 29 CFR 1910.120, paragraph (1)(1)(ii) shall be specified in the Emergency Response Plan. The Emergency Response Plan shall be included as part of the HASP. This Emergency Response Plan shall include written directions to the closest hospital as well as a map showing the route to the hospital.

m. Logs, Reports and Record Keeping

The Contractor shall maintain safety inspections, logs, and reports, accident/incident reports, medical certifications, training logs, monitoring results, etc. All exposure and medical monitoring records are to be maintained according to 29 CFR 1910 and 29 CFR 1926. The format of these logs and reports shall be developed by the Contractor

to include training logs, daily logs, weekly reports, safety meetings, medical surveillance records, and a phase-out report. These logs, records, and reports shall be maintained by the Contractor and be made available to the Engineer.

The Contractor shall immediately notify the Engineer of any accident/ incident. Within two working days of any reportable accident, the Contractor shall complete and submit an accident report to the Engineer.

n. Confined Space Entry Procedures

Confined space entry procedures, both permit required and non permit required, shall be discussed in detail.

o. Pre-Entry Briefings

The HASP shall provide for pre-entry briefings to be held prior to initiating any site activity and at such other times as necessary to ensure that employees are apprised of the HASP and that this plan is being followed.

p. Inspections/Audits

The HSM or HSO shall conduct inspections or audits to determine the effectiveness of the HASP. The Contractor shall correct any deficiencies in the effectiveness of the HASP.

F. HASP Implementation

The Contractor shall implement and maintain the HASP throughout the performance of work. In areas identified as having a potential risk to worker health and safety, and in any other areas deemed appropriate by the HSO, the Contractor shall be prepared to immediately implement the appropriate health and safety measures, including but not limited to the use of PPE, and engineering and administrative controls.

If the Engineer observes deficiencies in the Contractor's operations with respect to the HASP, they shall be assembled in a written field directive and given to the Contractor. The Contractor shall immediately correct the deficiencies and respond, in writing, as to how each was corrected. Failure to bring the work area(s) and implementation procedures into compliance will result in a Stop Work Order and a written directive to discuss an appropriate resolution(s) to the matter. When the Contractor demonstrates compliance, the Engineer shall remove the Stop Work Order. If a Stop Work Order has been issued for cause, no delay claims on the part of the Contractor will be honored.

Disposable CPC/PPE (i.e. disposable coveralls, gloves, etc.) that come in direct contact with hazardous or potentially hazardous material shall be placed into 55 gallon USDOT 17-H

drums and disposed of in accordance with federal, state, and local regulations. The drums shall be temporarily staged and secured within a secure area of the Project, to be approved by the Engineer, for management by others.

G. HASP Revisions

The HASP shall be maintained on-site by the Contractor and shall be kept current with construction activities and site conditions under this Contract. The HASP shall be recognized as a flexible document which shall be subject to revisions and amendments, as required, in response to actual site conditions, changes in work methods and/or alterations in the relative risk present. All changes and modifications shall be signed by the Contractor's HSM and shall require the review and acceptance by the Engineer prior to the implementation of such changes.

Should any unforeseen hazard become evident during the performance of the work, the HSO shall bring such hazard to the attention of the Contractor and the Engineer as soon as possible. In the interim, the Contractor shall take action, including Stop Work Orders and/or upgrading PPE as necessary, to re-establish and maintain safe working conditions and to safeguard on-site personnel, visitors, the public and the environment. The HASP shall then be revised/amended to reflect the changed condition.

Method of Measurement

A. Within thirty (30) calendar days of the award of the Contract, the Contractor shall submit to the Engineer for acceptance a breakdown of its lump sum bid price for this Item detailing:

1. The development costs associated with preparing the HASP in accordance with these Specifications.

2. The cost per month for the duration of the Project to implement the HASP and provide the services of the HSM and the HSO.

B. If the lump sum bid price breakdown is unacceptable to the Engineer, substantiation showing that the submitted costs are reasonable shall be required.

C. Upon acceptance of the payment schedule by the Engineer, payments for work performed will be made as follows:

1. The lump sum development cost will be certified for payment.

2. The Contractor shall demonstrate to the Engineer monthly that the HASP has been kept current and is being implemented and the monthly cost will be certified for payment.

3. Any month where the HASP is found not to be current or is not being implemented, the monthly payment for the Environmental Health and Safety Item shall be deferred to the

next monthly payment estimate. If the HASP is not current or being implemented for more than thirty calendar days, there will be no monthly payment.

4. Failure of the Contractor to implement the HASP in accordance with this Specification, shall result in the withholding of all Contract payments.

Basis of Payment

This work shall be paid for at the Contract lump sum price for "ENVIRONMENTAL HEALTH AND SAFETY," which shall include all materials, tools, equipment and labor incidental to the completion of this Item for the duration of the Project to maintain, revise, monitor and implement the HASP. Such costs include providing the services of the HSM and HSO, Contractor employee training, CPC, PPE, disposal of PPE and CPC, medical surveillance, decontamination facilities, engineering controls, monitoring, and all other HASP protocols and procedures established to protect the Health and Safety for all on-site workers.

Pay Item	Pay Unit
Environmental Health and Safety	Lump Sum

ITEM #0101110A - SOIL AMENDMENT

Description:

Work under this item shall consist of the placement of an oxygen releasing reagent into the base of specified excavation area(s) prior to backfilling to stimulate and/or enhance aerobic biodegradation of residual petroleum hydrocarbons.

This work is being performed under a General Permit for *In Situ Groundwater Remediation: Enhanced Aerobic Biodegradation (DEP-REM-GP-001)*, as authorized by the Connecticut Department of Energy and Environmental Protection (CTDEEP).

In addition, all activities shall be performed in accordance with USEPA 40 CFR Parts 260-268, OSHA 29 CFR 1926, OSHA 29 CFR 1910.120, CTDEEP 22a-449(d)-1 and 22a-449(c), and all other applicable state and federal regulations and codes.

Materials:

The soil amendment shall be ORC Advanced® (ORC-A) Pellets as manufactured by REGENESIS, or approved equal and shall consist of dust-minimizing, controlled-release oxygen pellets designed for direct application in open excavations. Pellets shall contain a mixture of calcium oxyhydroxide and calcium hydroxide (as the oxygen releasing compounds), as well as micro-nutrients including nitrogen, phosphorous, and potassium beneficial to aerobic biodegradation processes. Pellet size shall be 3 to 10 millimeters.

Installation Methods:

Work shall be performed in a manner which fully complies with the General Permit and associated documents, and the Contractor's Health and Safety Plan (HASP).

The Contractor shall comply with its HASP, as required under Item No. 0101000A, "Environmental Health and Safety," while performing the Soil Amendment work.

The Contractor shall carefully insert a pre-determined quantity of the oxygen releasing pellets into an excavator bucket, and then use the excavator to mix and distribute the pellets into the standing water in the bottom of the excavation. Unless specified otherwise by the Engineer, the amendment shall be uniformly distributed into the water at a rate of 32 pounds of dry amendment (ORC-A) per 100 square feet of open excavation area (as measured at the base of the excavation). After the amendment has been uniformly mixed, the given excavation area or excavation cell shall be backfilled in accordance with the Project Specification. When excavation is to proceed in cells or phases, the Contractor shall avoid re-excavating the areas where the amendment has already been emplaced.

Method of Measurement:

Soil Amendment will be measured for payment based on the net weight in pounds of oxygen releasing reagent delivered to the site and applied to the excavation area(s). Total weight shall be the summation of the weights of new sealed packages used for the amendment process, verified by providing copies of the delivery tickets and a count of emptied containers by the Engineer.

Basis of Payment:

This work will be paid for at the Contract unit price per pound of oxygen releasing reagent. This unit price shall include all necessary related labor, equipment, and materials associated with the procurement, delivery, handling, storage, and installation of the amendment.

Pay Item	Pay Unit
Soil Amendment	Lb.

ITEM #0101117A - CONTROLLED MATERIALS HANDLING

Description:

Work under this Item is intended to provide specific procedural requirements to be followed by the Contractor during the excavation of Controlled Materials from the Area of Environmental Concern (AOEC). Controlled Materials consisting of non-hazardous levels of regulated substances have been documented to exist within the Project limits. Such contamination is documented in the reports listed in the "Notice to Contractor – Environmental Investigations." This supplements Specifications Sections 2.02, 2.03, 2.05, and 2.06 and Contract Special Provisions for excavation wherever contaminated materials are encountered.

As indicated in the "Notice to Contractor – Environmental Investigations," the Project Area has been designated as an AOEC, and includes planned excavation of Controlled Materials. Specifically, as shown on the Project Plans, an extensive area of impacted soil associated with an historic release from a former gasoline underground storage tank (UST) is to be excavated. The Controlled Material removed from this excavation and/or any other excavations in the Project limits as determined by the Engineer, shall be transported and staged at an on-site temporary waste stockpile area (WSA). The WSA is to be established at the location shown on the Project Plans prior to initiation of intrusive Site activities in accordance with Item No. 0101128A. Controlled Materials staged in the WSA shall be handled and managed in accordance with the procedures presented herein. All remaining site soils not designated as Controlled Material excavated in conjunction with the planned Site activities (i.e., soil remediation, installation of the new tank systems, etc.) will not require material handling measures beyond those required for normal construction operations. These soils shall be segregated from those specifically identified as Controlled Material by the Engineer as well as all subbase material excavated as a part of project construction, and shall be utilized as fill/backfill within the Project limits, in accordance with the following conditions:

1. Such soil is deemed to be structurally suitable for use as fill by the Engineer; and
2. Such soil is not placed in an area subject to erosion.

Excavated soils deemed suitable for reuse are to be used on-site before other soils and/or fill, such that materials requiring off-site disposal are minimized. Provisions will be made should there be excess excavated material that cannot be reused within the Project limits.

Work under this Item shall include transporting and stockpiling materials at the temporary WSA; and covering, securing, and maintaining the stockpiled/stored materials throughout the duration of the Project. All excavated soils considered to be Controlled Material, excluding the existing pavement structure (asphalt and subbase), rock, ledge, and concrete, will not be reusable as backfill unless authorized by the Engineer in writing, and

will require special handling, disposal and documentation procedures as specified in Item 0202315A, "Disposal of Controlled Materials."

Materials:

The required materials are detailed on the Project Plans. All materials shall conform to the requirements of the Contract.

Polyethylene plastic sheeting for underlayment shall be at least 30 mils thick and a minimum width of 10 feet. Polyethylene plastic sheeting for covering excavated material shall be a thickness of 10 mils. and a minimum width of 10 feet.

Sandbags used to secure polyethylene covers shall be at least 30 pounds.

Runoff control barrier shall be constructed with hay bales (14 inches x 36 inches x 18 inches, typical).

Sorbent booms shall be 8 inches in diameter and 10 feet long and possess petrophilic and hydrophobic properties. Sorbent booms shall also have devices (i.e., clips, clasps, etc.) for connection to additional lengths of boom.

Construction Methods:

A. General

When Controlled Materials are encountered during the course of the work, health and safety provisions shall conform to the appropriate sections of the Contract. Provisions may include implementation of engineering controls, air and personal monitoring, the use of chemical protective clothing (CPC), personal protective equipment (PPE), and decontamination procedures.

Unless otherwise directed by the Engineer, Controlled Material removed from the excavation within the AOEC shall be transported directly from the point of origin on the Project to the WSA. The stockpiles of excavated Controlled Materials shall be maintained as shown on the Project Plans. The Contractor shall plan excavation activities within the AOEC in consideration of the capacity of the WSA and the material testing and disposal requirements of the applicable Contract item. **No claims for delay shall be considered based on the Contractor's failure to coordinate excavation activities as specified herein.**

The Engineer will sample the stockpiled Controlled Materials at a frequency and for the constituents to meet the acceptance criteria of the treatment/recycling/disposal facilities submitted by the Contractor. The Contractor is hereby notified that laboratory turnaround time is expected to be fifteen (15) working days. Turnaround time is the period of time beginning when the Contractor notifies the Engineer which facility it intends to use and that

the bin is full and the stockpile is ready for sampling, and ending with the Contractor's receipt of the laboratory analytical results. Any change of intended treatment/recycling/disposal facility may prompt the need to resample and will therefore restart the time required for laboratory turnaround. The laboratory will furnish such results to the Engineer. Upon receipt, the Engineer will make available to the Contractor the results of the final waste characterization determinations. **No delay claim will be considered based upon the Contractor's failure to accommodate the laboratory turnaround time as identified above.**

B. Transportation and Stockpiling

In addition to following all pertinent federal, state and local laws or regulatory agency policies, the Contractor shall adhere to the following precautions during transport of non-hazardous Controlled Materials:

1. Transported Controlled Materials are to be covered prior to leaving the point of generation and are to remain covered until the arrival at the WSA;

2. All vehicles departing the site are properly logged to show the vehicle identification, driver's name, time of departure, destination, and approximate volume and content of materials carried;

3. All vehicles are to have secure, watertight containers free of defects for material transportation;

4. No material shall leave the area of excavation until there is adequate lay-down area prepared in the respective WSA; and

5. Documentation must be maintained indicating that applicable laws have been satisfied and that the materials have been successfully transported and received at the WSA staging area.

Construction of the WSA shall be completed prior to the initiation of construction activities generating Controlled Materials. Plastic polyethylene sheeting shall underlay all excavated Controlled Materials. Measures shall be implemented to divert rainfall away from the WSA.

Placement of sorbent boom along the perimeter of the WSA shall be conducted when soil is saturated with petroleum product.

Excavated materials shall be staged as shown on the Project Plans or as directed by the Engineer.

C. WSA Maintenance

The Contractor shall provide all necessary materials, equipment, tools and labor for anticipated activities within the WSA. Such activities include, but are not limited to, handling and management of stockpiled soil and drummed CPC/PPE; uncovering and re-covering stockpiles; maintenance of the WSA; replacement of damaged components (e.g., sand bags, plastic polyethylene sheeting, etc.); and waste inventory record management. The Contractor shall manage all materials in the WSA in such a way as to minimize tracking of potential contaminated materials across the site and off-site, and minimize dust generation.

Each stockpile shall be securely covered when not in active use with a cover of sufficient size to prevent generation of dust and infiltration of precipitation. The cover shall be maintained, as necessary, to prevent wind erosion. Additionally, the Runoff Control Barrier shall be in-place with hay bales placed end-to-end to prevent the release of stored materials in the event of cover failure.

The staged stockpiles shall be inspected at least daily by the Contractor to ensure that the cover and containment have not been damaged and that there is no apparent leakage from the piles. If the cover has been damaged, or there is evidence of leakage from the stockpiles, the Contractor shall immediately replace the cover or containment as needed to prevent the release of materials to the environment from the piles.

An inventory of stockpiled/staged materials and drummed CPC/PPE shall be conducted on a daily basis. Inventory records shall indicate the approximate volume of material/drums stockpiled per day; the approximate volume of material/drums stockpiled to date; material/drums loaded and transported off-site for disposal; any materials loaded and transported for on-site reuse; and the identification of stockpiled materials relative to their points of generation.

Following the removal of all stockpiled Controlled Materials, residuals shall be removed from surfaces of the WSA as directed by the Engineer. This operation shall be accomplished using dry methods such as shovels, brooms, mechanical sweepers or a combination thereof. Residuals shall be disposed of as Controlled Materials.

D. Dewatering

Dewatering activities shall conform to Items in pertinent articles of the Contract.

E. Decontamination

All equipment shall be provided to the work site free of contamination. The Engineer may prohibit from the site any equipment that in his opinion has not been thoroughly decontaminated prior to arrival. Any decontamination of the Contractor's equipment prior to arrival at the site shall be at the expense of the Contractor. The Contractor is prohibited from decontaminating equipment on the Project that has not been thoroughly decontaminated prior to arrival.

The Contractor shall furnish labor, materials, tools and equipment for decontamination of all equipment and supplies that are used to handle Controlled Materials. Decontamination shall be conducted at an area designated by the Engineer and may be required prior to equipment and supplies leaving the Project, between stages of the work, or between work in different AOECs.

Dry decontamination procedures are recommended. Residuals from dry decontamination activities shall be collected and managed as Controlled Materials. If dry methods are unsatisfactory as determined by the Engineer, the Contractor shall modify decontamination procedures as required, subject to the Engineer's approval.

F. Dust Control

The Contractor shall implement a fugitive dust suppression program in accordance with the Contract to prevent the off-site migration of particulate matter and/or dust resulting from excavation, loading and operations associated with Controlled Materials. It shall be the Contractor's responsibility to supervise fugitive dust control measures and to monitor airborne particulate matter. The Contractor shall:

1. Employ reasonable fugitive dust suppression techniques.

2. Visually observe the amounts of particulate and/or fugitive dust generated during the handling of Controlled Materials. If the apparent amount of fugitive dust and/or particulate matter is not acceptable to the Engineer, the Engineer may direct the Contractor to implement corrective measures at his discretion, including, but not limited to, the following:

   a. Apply water to pavement surfaces;

   b. Apply water to equipment and excavation faces; and

   c. Apply water during soil excavation, loading and dumping.

G. Permit Compliance

The Contractor shall comply with the terms and conditions of the CTDEEP "General Permit for Contaminated Soil and/or Sediment Management (Staging and Transfer)," including the General Operating Conditions and the Specific Operating Conditions, except that the Engineer will conduct all soil characterization and perform all record keeping. In particular, the Contractor shall:

1. Operate, maintain and repair the WSA in conformance with the requirements of the General Permit.

2. Maintain a communications system capable of summoning fire, police, and/or other emergency service personnel.

3. Prevent unauthorized entry onto the stockpiles by the use of fences, gates, or other natural or artificial barriers.

4. Separate incidental excavation waste to the satisfaction of the receiving facility or to an extent that renders the contaminated soil and/or sediment suitable for its intended reuse.

5. Isolate and temporarily store incidental waste in a safe manner prior to off-site transport to a facility lawfully authorized to accept such waste.

6. Not store more than 100 cubic yards of incidental waste at any one time.

7. Sort, separate and isolate all hazardous waste from contaminated soil.

8. Prevent or minimize the transfer or infiltration of contaminants from the stockpiles to the ground as detailed in "B. Transportation and Stockpiling," above.

9. Securely cover each stockpile of soil as detailed in "C. WSA Maintenance," above.

10. Minimize wind erosion and dust transport as detailed in "F. Dust Control," above.

11. Use anti-tracking measures at the WSA to ensure the vehicles do not track soil from the WSA onto a public roadway at any time.

12. Instruct the transporters of contaminated soil of best management practices for the transportation of such soil (properly covered loads, removing loose material from dump body, etc.).

13. Control all traffic related to the operation of the facility in such a way as to mitigate the queuing of vehicles off site and excessive or unsafe traffic impact in the area where the facility is located.

14. Ensure that except as allowed in Section 22A-174-18(b)(3)(C) of the Regulations of Connecticut State Agencies, trucks are not left idling for more than three (3) consecutive minutes.

H. Material Tracking

The Contractor shall employ all methods necessary to prevent material from being tracked beyond the excavation area. This includes but is not limited to the use of anti-tracking pads and frequently sweeping the area as necessary to prevent the material from being tracked off-site. The route from the excavations to the WSA shall be cleaned daily, or as directed by the Engineer to remove any Controlled Material debris lost in transit. The Contractor shall also

use all means necessary to prevent material and water generated from the excavation from entering the on-site drainage system.

Method of Measurement:

The work of "CONTROLLED MATERIAL HANDLING" will be measured for payment by the number of cubic yards of Controlled Material excavated within the AOECs and taken to the WSA. This measurement shall be in accordance with and in addition to the quantity measured for payment of the applicable excavation item in Specification Sections 2.02, 2.03, 2.05, 2.06, or the Contract Special Provisions, as applicable. Excess excavations made by the Contractor beyond the payment limits specified in the Contract will not be measured for payment and the Contractor assumes all costs associated with the appropriate handling, management and disposal of this material.

Basis of Payment:

This work will be paid for at the Contract unit price, which shall include transportation from the excavation sites to the WSA, including any intermediate handling steps; stockpiling Controlled Materials at the WSA; covering, securing, and maintaining the individual stockpiles within the WSA throughout the duration of the Project; and all tools, equipment, material and labor incidental to this work.

This price shall also include equipment decontamination; the collection of residuals generated during decontamination and placement of such material in the WSA; and the collection and disposal of liquids generated during equipment decontamination activities.

All materials, labor and equipment associated with compliance with the "General Permit for Contaminated Soil and/or Sediment Management (Staging and Transfer)" will not be measured separately, but will be considered incidental to the item "Controlled Materials Handling."

Pay Item	Pay Unit
Controlled Materials Handling	C.Y.

ITEM #0101128A - SECURING, CONSTRUCTION AND DISMANTLING OF A WASTE STOCKPILE AND TREATMENT AREA

Description:

Work under this Item shall consist of the securing, construction and dismantling of the temporary Waste Stockpile Area at the locations designated on the Project Plans (Drawing ENV-004) and in accordance with the Contract. All Controlled Materials excavated during construction activities at the Litchfield Project site shall be stockpiled in the WSA. The WSA shown on the Plans is to be used exclusively for temporary stockpiling of excavated materials from within Project AOECs for determination of disposal classification.

Materials:

The required materials are detailed on the Project Plans. All materials shall conform to the requirements of the Contract.

Construction blocks shall be solid precast rectangular concrete 6 feet in length, 3 in width, and 2 feet in height.

Polyethylene plastic sheeting for underlayment shall be a thickness of 30 mils and minimum width of ten feet.

Sand bags used to secure polyethylene sheeting soil covers shall have a minimum weight of thirty pounds.

Hay bales shall conform to the requirements of Section 2.18.02 of the Specifications.

Construction Methods:

The WSA shall be constructed in accordance with the Contract at the locations shown on the Project Plans.

Construction of the WSA shall be completed prior to the initiation of construction activities generating Controlled Materials. The Contractor is responsible for the maintenance and protection of all utilities potentially affected during WSA construction. The Contractor shall locate and mark all existing utilities potentially affected prior to initiating WSA construction.

The proposed location of the WSA shall be cleared of any debris and vegetation as directed by the Engineer. Any objectionable materials, which may result in damage to the polyethylene sheeting underlayment, shall be removed prior to stockpiling excavated Controlled Materials.

The Contractor shall comply with the terms and conditions of the CTDEEP *General Permit for Contaminated Soil and/or Sediment Management (Staging and Transfer*), including the General Operating Conditions and the Specific Operating Conditions, except that the Engineer will conduct all soil/sediment characterization and perform all record keeping. In particular, the Contractor shall:

1. Construct and repair the WSA in conformance with the requirements of the General Permit.
2. Prevent unauthorized entry onto the stockpiles by the use of fences, gates, or other natural or artificial barriers.
3. Install anti-tracking measures at the WSA to ensure the vehicles do not track soil from the WSA onto a public roadway at any time.
4. Post and maintain a sign that is visible from a distance of at least 25' at the WSA identifying the name of the permittee (State of CT, Department of Transportation), the DOT field office phone number, the hours of operation for the WSA, and the phrase, "Temporary Soil Staging Area". Lettering shall be at least one inch (1") high with a minimum overall sign dimension of four (4) feet wide by two (2) feet high. Such sign is only required if the capacity of the WSA is equal to or greater than 1,000 cubic yards. If initially the WSA capacity is less than 1,000 c.y. and the WSA capacity is subsequently increased, the Contractor shall post and maintain the required sign at no additional cost to the State, prior to stockpiling the additional material.

Following the removal of all stockpiled material, the Contractor shall use dry decontamination procedures for all surfaces of the WSA as directed by the Engineer. Residual materials shall be disposed of as Controlled Materials. If the results from dry methods are unsatisfactory to the Engineer, the Contractor shall modify decontamination procedures as required.

The Contractor shall be responsible for the collection and treatment/recycling/disposal of any liquid wastes that may be generated by its decontamination activities in accordance with applicable regulations.

Upon completion of the Project and following removal of all residual Controlled Materials, the Contractor shall dismantle the WSA and return the area to original condition. During dismantling, the Contractor shall remove all materials such as polyethylene sheeting and sand bags. Materials shall be disposed of by the Contractor as solid waste in accordance with the Contract and all Federal, State and local regulations.

Operation and maintenance of the WSA shall be included under Item 101117A "Controlled Material Handling."

Method of Measurement:

This work will be measured for payment at the Lump Sum cost for securing, construction, and dismantling of a WSA.

Basis of Payment:

This work will be paid for at the Contract Lump Sum, which shall include all materials, tools, labor, equipment, permits, and work needed to secure, construct, decontaminate and dismantle the WSA, including all clearing, grubbing, grading, clean up, site restoration and seeding.

All materials, labor and equipment associated with compliance with the *General Permit for Contaminated Soil and/or Sediment Management (Staging and Transfer)* will not be measured separately, but will be considered incidental to the Item "Securing, Construction and Dismantling of a Waste Stockpile and Treatment Area".

Pay Item	Pay Unit
Securing, Construction and Dismantling Of a Waste Stockpile and Treatment Area	L.S.

ITEM #0101143A - HANDLING AND DISPOSAL OF REGULATED ITEMS

Description:

Work under this item shall include the management of regulated items and all associated work by persons who are knowledgeable, qualified and trained in the handling and disposal of these materials/items and the subsequent cleaning of the affected environment. Regulated items include hazardous and other materials and wastes, the disposal of which is restricted by federal and/or state laws and regulations and which may be within the underground storage tanks (USTs), and activated carbon vessels to be removed from the Site, along with the contents removed from the facility's floor drains and sediment traps (servicing the oil/water separator). Regulated items include those listed herein, or additional similar items identified on-site by the Engineer. Work under this item does not include asbestos-containing materials, lead paint or contaminated soils.

Activities shall be performed in accordance with, but not limited to, the current revision of the USEPA and CTDEEP Hazardous Waste Regulations (40 CFR 260-282, 22a-209 and 22a-449(c)), USEPA PCB Regulations (40 CFR 761), USEPA Protection of Stratospheric Ozone (40 CFR 82), OSHA Hazard Communication (29 CFR 1910.1200), OSHA Hazardous Waste & Emergency Response Regulations (29 CFR 1910.120), USDOT Hazardous Materials Regulation (49 CFR 171-180), OSHA, RCRA, CERCLA, CAA, TSCA, and all other laws and regulations.

The work activities include the removal, handling, packing, labeling, transport, manifesting and recycling or disposal of liquids and/or sludges contained in four (4) USTs to be excavated and removed from the site, the facility's floor drains and sediment traps associated with servicing the oil/water separator, and three (3) activated carbon vessels and contents from an abandoned ground water treatment system. The contents of these USTs include gasoline, diesel fuel, No. 2 fuel oil, and wastewater from vehicle and equipment wash-down.

This Item also includes the handling and disposal of any wastewaters generated from dewatering/product removal (i.e., skimming) of the excavation as directed by the Engineer.

The Contractor is responsible for verifying actual quantities of the items with hazardous/regulated material/waste constituents and for their proper handling and disposal. The recycling or proper disposal, as appropriate, of all regulated items shall be completed prior to the initiation of any UST removal activities.

Materials:

All materials shall be suitable for the management of regulated items and shall meet all applicable federal, state and local regulations. Such materials include, but are not limited to, proper containers, packing materials, labels, signs, shipping papers, personal protective equipment (PPE) and spill kits.

Construction Methods:

A. Allowable Disposal/Recycling Facilities

Disposal facilities for RCRA-hazardous, TSCA-hazardous, Connecticut Regulated, and Universal wastes shall be selected from among those listed below. No other facility shall be used for these types of wastes without the written approval of the Engineer.

Clean Harbors of Braintree, Inc. 1 Hill Avenue Braintree, MA 02184 Phone: (781) 380-7100 Fax: (781) 380-7193 RCRA, TSCA & CRW Gas, Liquid, Solid, Sludge	Clean Harbors of Connecticut, Inc. 51 Broderick Road Bristol, CT 06010 Phone: (860) 583-8917 Fax: (860) 585-1740 RCRA TSCA & CRW Gas, Liquid, Solid, Sludge
Clean Harbors of Woburn (Murphy's Waste Oil Serv., Inc.) 252 Salem Street Woburn, MA 01801 Phone: (781) 935-9066 Fax: (781) 935-8615 RCRA, CRW: Oil, Oil/Water Mixtures, Oil Filters, Oily Soil and Debris, F001/F002 Contaminated Oils, Antifreeze	Northland Environmental, Inc. (PSC Environmental Syst) 275 Allens Ave Providence, RI 02905 Phone: (401) 781-6340 Fax: (401) 781-9710 RCRA Liquid and Solid Organics, Oils, Solvents, Pesticides, Chlorinated Hydrocarbons, Empty Drums
Tradebe Environmental Services, Inc. Bridgeport, CT 06610 Phone: (800) 404-4408 Fax: (203) 334-1666 RCRA and CRW Waste Oil, Fuel, Wastewater	Tradebe Environmental Services, Inc. 136 Gracey Avenue Meriden, CT 06451 Phone: (203) 238-8147 Fax: (888) 276-0887 RCRA, CRW Waste Oil, Fuel, Wastewater

Note: The category of material accepted by each facility listed above is for informational purposes only. The Contractor shall verify facility acceptance of each type of regulated item.

B. Submittals

Thirty (30) days prior to commencement of work involving the management of regulated items, the Contractor shall submit to the Engineer for approval, the following documentation:

1. Copy of current Spill Contractor Permit registration issued by the CTDEEP.
2. Hazard communication training for all employees performing this work.
3. Names of the treatment facilities, recycling facilities and/or disposal facilities the Contractor intends to use to receive each type of regulated item.

4. Names of the Hazardous Material Transporter(s) the Contractor intends to use to transport hazardous materials from this Project.
5. Copy of current Hazardous Material Transporter USDOT Certificate of Registration for each transporter.
6. Copy of current Hazardous Waste Transporter Permit for the State of Connecticut, the destination state(s), and all other applicable states for each transporter.

One (1) week prior to the start of work that will generate RCRA hazardous waste above conditionally exempt small quantities, the Contractor shall obtain from the Engineer a temporary EPA Hazardous Waste Generator ID number, for use in manifesting the waste.

C. Regulated Item Management Provisions

1. General Requirements

The Contractor's OSHA Competent Person shall be in control on the job site at all times during hazardous material management work activities. This person must be capable of identifying existing hazards, possess the authority to implement corrective measures to reduce/eliminate the hazards, comply with applicable federal, state and local regulations that mandate work practices, and be capable of performing the work of this contract. All employees who perform regulated material management related work shall be properly trained and qualified to perform such duties.

All labor, materials, tools, equipment, services, testing, insurance and incidentals necessary or required to perform the work in accordance with applicable governmental regulations, industry standards and codes, and these specifications shall be provided by the Contractor.

The Contractor shall be responsible for verification of all field conditions affecting performance of the work. The Contractor shall submit to the Engineer for concurrence any additional items not listed herein that it believes to be regulated items included under this Item. However, compliance with applicable requirements is solely the responsibility of the Contractor.

Environmental sampling shall be conducted as deemed necessary by the Engineer. Spill areas shall be cleaned by the Contractor until accepted by the Engineer. The Engineer may sample the spill area to demonstrate Contractor compliance with an acceptable standard.

2. Personnel Protection

Prior to commencing work, the Contractor shall provide hazard communication training to all employees as necessary in accordance with OSHA 29 CFR 1926.59 and 29 CFR 1910.1200 and instruct all workers in all aspects of personnel protection, work procedures, emergency procedures and use of equipment, including procedures unique to

this project. Worker health and safety protocols that address potential and/or actual risk of exposure to site specific hazards are solely the responsibility of the Contractor.

The Contractor shall provide respiratory protection that meets the requirements of OSHA as required in 29 CFR 1910.134 and 29 CFR 1926.1000. A formal respiratory protection program, including appropriate medical surveillance, must be implemented in accordance with OSHA standards. The Contractor shall, as necessary, conduct exposure assessment air sampling, analysis, and reporting to ensure the workers are afforded appropriate respiratory protection.

The Contractor shall provide and require all workers to wear appropriate personal protective equipment, including protective clothing and respiratory protection, as required, within regulated work areas which exceed OSHA Personnel Exposure Limits (PELs) or when handling hazardous waste.

3. Regulated Item Management Work Procedures

Prior to beginning work on-site, the Contractor shall prepare waste characterization profile forms for each type of waste stream to be generated and forward such forms to the Engineer for review, approval and signature on behalf of ConnDOT. Upon approval, the Contractor shall forward such forms to the appropriate disposal facilities for acceptance.

The Contractor shall utilize all appropriate engineering controls and safety and protective equipment while performing the work in accordance with ConnDOT, OSHA, USEPA, USDOT, CTDEEP and Connecticut Department of Public Health (DPH) regulations.

The Contractor shall employ work practices so as to minimize the disturbance of the constituents in the regulated items, and prevent breakage and spills. In the event of a spill, the Contractor shall cordon off the area and notify the Engineer. The Contractor is responsible to have spills and the affected areas decontaminated to the acceptance of the Engineer by personnel trained in hazardous waste operator emergency response.

The Contractor shall carefully and properly remove, handle, pack, label and manifest all of the regulated items in waste containers specified and suitable to contain the waste in accordance with all federal and state regulations.

Prior to transportation and recycling and/or disposal, all proper ConnDOT, USEPA, OSHA, CTDEEP and USDOT labels shall be affixed to the waste containers, and hazardous materials shipping papers, such as waste manifests and bills of lading, shall be completed.

4. Waste Disposal

Efforts shall be made to recycle the constituents of the regulated items rather than dispose of them, in accordance with the waste minimization efforts required under RCRA.

The Contractor shall forward the appropriate originals of shipping papers to the Engineer the same day the regulated items leave the project site. All vehicles departing the site transporting hazardous materials shall display proper USDOT placards, as appropriate for the type of waste being transported.

5. Project Closeout Documents

   Within thirty (30) days of completion of the on-site project work, the Contractor shall submit to the Engineer copies of the following completed documents:

   a. Hazardous Waste Manifests
   b. Waste Shipment Records/Bills of Lading
   c. Recycling Receipts

All of these documents must include the signature of an authorized disposal facility representative acknowledging receipt of hazardous materials.

Method of Measurement:

The work of "Handling and Disposal of Regulated Items" shall be provided for in accordance with Article 1.04.05 – Extra Work.

Basis of Payment:

The work of "Handling and Disposal of Regulated Items" shall be paid for in accordance with Article 1.04.05 – Extra Work, which price shall include the management, removal, handling, packing, labeling, transport, manifesting, recycling or disposal of the regulated constituents in the specific equipment/items scheduled for removal at the project site, and all equipment, materials, tools and labor incidental to the work.

Final payment will not be made until completed copies of the specified Project Closeout Documents have been provided to the Engineer. Once completed, facility-signed copies have been received in their entirety, the Engineer will approve the final payment.

Pay Item	Pay Unit
Handling and Disposal of Regulated Items	Est.

ITEM #0177150A - GENERAL BUILDING RENOVATION

Description: Under this item, the Contractor shall complete all work depicted on the Contract Plans and described in the CSI-formatted Specifications that make up this Major Lump Sum Item (MLSI). Refer to Form 817 Article 1.20-1.02.04 for additional information in this regard.

Any work incidental to another bid item which is not specifically described or included in the bid item, but which is required for performance and completion of the work required under the Contract, shall be considered to be included under this item.

Materials: All materials shall be as required by the Contract Plans and as described in the CSI-formatted Specifications that make up this MLSI.

Construction Methods: All methods of construction shall conform to the requirements as stipulated in the CSI-formatted Specifications that make up this MLSI.

Method of Measurement: This item will be paid for at the contract lump sum price for "General Building Renovation" complete.

Basis of Payment: This item will be paid for at the contract lump sum price for "General Building Renovation", which price shall include all administrative and procedural requirements, material, equipment, labor, and work incidental thereto.

PAY ITEM	PAY UNIT
General Building Renovation	LS

ITEM #0202315A - DISPOSAL OF CONTROLLED MATERIALS

Description:

Work under this item shall consist of the loading, transportation, and final off-site treatment/ recycling/disposal of Controlled Materials (excluding dewatering fluids) that have been generated from excavations associated with the planned soil remediation and the removal/closure of the underground storage tanks (USTs), brought to the temporary soil staging area, and are not suitable for reuse on the Project. The nature of this contaminated material is documented in the reports listed in the "Notice to Contractor – Environmental Investigations." The Controlled Material, after proper characterization by the Engineer, shall be taken from the Controlled Material temporary waste stockpile area (WSA), loaded, transported to and treated/recycled/disposed at a permitted treatment/ recycle/disposal facility listed herein.

The Contractor must use one or more of the following Department-approved treatment/ recycle/disposal facilities for the disposal of non-hazardous soils:

Advanced Disposal Services Greentree* Landfill 635 Toby Road Kersey, PA 15846 814-265-1744; Don Henrichs	Allied Waste Niagara Fall Landfill, LLC 5600 Niagara Falls Blvd. Niagara, NY 14304 716-285-3398; David Hanson
Clean Earth of Carteret 24 Middlesex Avenue Carteret, NJ 07008 732-541-8909; Cheryl Coffee	Clean Earth of Philadelphia 3201 S. 61 Street Philadelphia, PA 19153 732-541-8909; Cheryl Coffee
Clean Earth of Southeast Pennsylvania, Inc. (AKA CESP) 7 Steel Road Morrisville, PA 19067 732-541-8909; Cheryl Coffee	Clinton Landfill 242 Church Street Clinton, MA 01510 978- 365-4110; Chris McGown
Colonie Landfill 1319 Louden Road Cohoes, NY 12047 518-951-0794: Eric Morales	Cranston Sanitary Landfill 1690 Pontiac Avenue Cranston, RI 02920 413-552-3688; Paul Mahoney
Cumberland County Landfill (aka Community Refuse Services - Managed by Interstate Waste Services) 135 Vaughn Road Shippensburg, PA 17257 717-423-9953; Kevin Bush	ESMI of New York 304 Towpath Road Fort Edward, New York 12828 (800) 511-3764; Peter Hanson

ESMI of New Hampshire 67 International Drive Loudon, NH 03307 (603) 783-0228; Stephen Raper	Hazelton Creek Properties, LLC* 280 South Church Street Hazelton, PA 18201 570-207-2000; Allen Swantek
Manchester Landfill 311 Olcott Street Manchester, CT 06040 860-647-3248; Brooks Parker	Mostoller Landfill (Managed by Interstate Waste Services) 7095 Glades Pike Summerset, PA 15501 814-444-0112; Scott Lambert
Ontario County Landfill (Managed by Casella Waste) 3555 Post Farm Road Stanley, NY 14561 603-235-3597; Scott Sampson	Phoenix Soil LLC 58 North Washington Street Plainville, CT 06062 (800) 586-4774; Sue Brenner
Red Technologies Soil 232 Airline Avenue Portland, CT 06980 860-342-1022; Christopher Windangle	Republic Services Conestoga Landfill* 420 Quarry Road Morgantown, PA 19543 717-246-4640; James Kuhn
Soil Safe, Inc. 378 Route 130 Logan Township, Bridgeport, NJ 08085 410-872-3990; George Dohn	Ted Ondrick Company, LLC 58 Industrial Road Chicopee, MA 01020 (413) 592-2566; Alan Desrosiers
Tunnel Hill Reclamation 2500 Township Road, 205 Route 2 New Lexington, OH 43764 914-713-0203; William Gay	Upton Landfill – Upton Site Remediation, LLC Maple Avenue Upton, MA 413-522-3688; Paul Mahoney
Waste Management: RCI Fitchburg Landfill Fitchburg Princeton Road Westminster, MA 01473 978-355-6821; Frank Sepiol	Waste Management of New Hampshire P.O. Box 7065 90 Rochester Neck Road Rochester, NH 03839 603-330-2170; Ellen Bellio

* - Please note that if this facility is to be used, each bin letter will require an additional 10 day (or more) waiting period in addition to the 15 day lab period designated in the Specifications to allow for Pennsylvania Department of Environmental Protection (PADEP) review.

The above list contains treatment/recycle/disposal facilities which can accept the wastestream generated by the project in quantities that may be limited by their permits and their operations restrictions. It is the responsibility of the Contractor to verify that a facility will be available and

capable of handling the volume as well as the chemical and physical characteristics of the material generated by the project.

Construction Methods:

A. **Material Disposal**

The Engineer will sample materials stored at the WSA at a frequency established by the selected treatment/recycling/disposal facilities. The Contractor shall designate to the Engineer which facilities it intends to use, as well as the facility acceptance criteria and sampling frequency, prior to samples being taken. The Contractor is hereby notified that laboratory turnaround time is expected to be fifteen (15) working days. Turnaround time is the period of time beginning when the Contractor notifies the Engineer which facility it intends to use and that the bin within the WSA is full and ready for sampling, and ending with the Contractor's receipt of the laboratory analytical results. Any change of intended treatment/recycling/disposal facility may prompt the need to resample and will therefore restart the time required for laboratory turnaround. The laboratory will furnish such results to the Engineer. Upon receipt, the Engineer will make available to the Contractor the results of the final waste characterization determinations. **No delay claim will be considered based upon the Contractor′s failure to accommodate the laboratory turnaround time as identified above.**

The Contractor shall obtain and complete all paperwork necessary to arrange for material disposal (such as disposal facility waste profile sheets). It is solely the Contractor's responsibility to co-ordinate the disposal of Controlled Materials with its selected treatment/recycling/disposal facility(s). Upon receipt of the final approval from the facility, the Contractor shall arrange for the loading, transport and treatment/recycling/disposal of the materials in accordance with all Federal and State regulations. **No claim will be considered based on the failure of the Contractor's selected disposal facility(s) to meet the Contractor's production rate or for the Contractor's failure to select sufficient facilities to meet its production rate.**

Any material processing (including but not limited to the removal of woody debris, scrap metal, pressure-treated and untreated wood timber, large stone, concrete, polyethylene sheeting or similar material) required by the Contractor's selected facility will be completed by the Contractor prior to the material leaving the site. It is solely the Contractor's responsibility to meet any such requirements of its facility. Any materials removed shall be disposed of or recycled in a manner acceptable to the Engineer at no additional cost.

All manifests or bills of lading utilized to accompany the transportation of the material shall be prepared by the Contractor and signed by an authorized Department representative, as Generator, for each truck load of material that leaves the site. The Contractor shall forward the appropriate original copies of all manifests or bills of lading to the Engineer the same day the material leaves the Project.

A load-specific certificate of treatment/recycling/disposal, signed by the authorized agent representing the disposal facility, shall be obtained by the Contractor and promptly delivered to the Engineer for each load.

B. Material Transportation

In addition to all pertinent Federal, State and local laws or regulatory agency policies, the Contractor shall adhere to the following precautions during the transport of Controlled Materials off-site:

1. Transported Controlled Materials are to be covered sufficiently to preclude the loss of material during transport prior to leaving the site and are to remain covered until their arrival at the selected treatment/recycling/disposal facility.

2. All vehicles departing the site are to be properly logged to show the vehicle identification, driver's name, time of departure, destination, and approximate volume and contents of materials carried.

3. No materials shall leave the site unless a treatment/recycling/disposal facility willing to accept all of the material being transported has agreed to accept the type and quantity of waste.

C. Equipment Decontamination

All equipment shall be provided to the work site free of gross contamination. The Engineer may prohibit from the site any equipment that in his opinion has not been thoroughly decontaminated prior to arrival. Any decontamination of the Contractor's equipment prior to arrival at the site shall be at the expense of the Contractor. The Contractor is prohibited from decontaminating equipment on the Project that has not been thoroughly decontaminated prior to arrival.

The Contractor shall furnish labor, materials, tools and equipment for decontamination of all equipment and supplies that are used to handle Controlled Materials. Decontamination shall be conducted at an area designated by the Engineer and shall be required prior to equipment and supplies leaving the Project, between stages of the work, and between work in different Areas of Environmental Concern (AOECs).

The Contractor shall use dry decontamination procedures. Residuals from dry decontamination activities shall be collected and managed as Controlled Materials. If the results from dry methods are unsatisfactory to the Engineer, the Contractor shall modify decontamination procedures as required.

The Contractor shall be responsible for the collection and treatment/recycling/disposal of any liquid wastes that may be generated by its decontamination activities in accordance with applicable regulations.

Method of Measurement:

The work of "Disposal of Controlled Materials" will be measured for payment as the actual net weight in tons of material delivered to the treatment/recycling/disposal facility. Such determinations shall be made by measuring each hauling vehicle on the certified permanent scales at the treatment/recycling/disposal facility. Total weight will be the summation of weight bills issued by the facility specific to this Project. Excess excavations made by the Contractor beyond the payment limits specified in Specification Sections 2.02, 2.03, 2.05, 2.06, or the Contract Special Provisions (as appropriate), will not be measured for payment and the Contractor assumes responsibility for all costs associated with the appropriate handling, management and disposal of this material.

The disposal of excavated materials, originally anticipated to be Controlled Materials, but determined by characterization sampling not to contain concentrations of regulated chemicals (non-polluted or "clean" materials) will not be measured for payment under this item but will be considered as surplus excavated materials and will be paid in accordance with Article 1.04.05.

Any materials stored in the WSAs, and which are reused within Project limits, will not be measured for payment under this Item. This material will be paid for in accordance with Article 1.04.05.

Equipment decontamination, the collection of residuals, and the collection and disposal of liquids generated during equipment decontamination activities, will not be measured separately for payment.

Any material processing required by the Contractor-selected disposal facility, including the proper disposal of all removed materials, will not be measured for payment.

Basis of Payment:

This work will be paid for at the Contract unit price, which shall include the loading and transportation of Controlled Materials from the WSAs to the treatment/recycling/disposal facility; the fees paid to the facility for treatment/recycling/disposal; the preparation of all related paperwork; and all equipment, materials, tools, and labor incidental to this work. **This unit price will be applicable to all of the listed disposal facilities and will not change for the duration of the Project.**

This price shall also include equipment decontamination; the collection of residuals generated during decontamination and placement of such material in the WSA; and the collection and disposal of liquids generated during equipment decontamination activities.

Pay Item	Pay Unit
Disposal of Controlled Materials	Ton

ITEM #0202640A - 2-INCH GROUNDWATER MONITORING WELL ABANDONMENT

Description:

Work under this item shall consist of the abandonment of 2-inch groundwater monitoring wells, soil vapor extraction and air sparge wells by a registered well driller at the locations shown on the Plans or as directed by the Engineer. Note that the Project encompasses wells located at the Litchfield Maintenance Facility.

The well driller must be registered in the State of Connecticut in accordance with Regulations of Connecticut State Agencies (RCSA) Department of Consumer Protection (DCP) Regulations for the Well Drilling Industry, Sections 25-128-35, -58b and -60b.

Materials:

Groundwater monitoring wells shall be sealed with a grout complying with RCSA 25-128-36 (e.g., bentonite clay grout, bentonite cement grout, etc.

Construction Methods:

The Contractor shall submit the name of the registered driller and a copy of their Certificate of Registration, as indicated in the Connecticut Department of Consumer Protection (DCP) Regulations Section 25-129, at least fourteen (14) days prior to starting well abandonment work.

Fifteen existing 2-inch monitoring wells, located at the Litchfield Maintenance Facility as depicted on the Project Plans (Drawing ENV-002) are to be abandoned. Prior to the planned excavation work, the Contractor shall confirm the location and depth of the subject wells. Wells with a total depth of up to 15 feet below ground surface (bgs), and located within the areas of planned excavation work (i.e., soil remediation) may be removed as a part of such work and will not require abandonment by a registered driller. Wells with a depth greater than 15 feet bgs must be properly abandoned by a registered driller prior to commencement of earthwork.

The Contractor shall coordinate the work of monitoring well abandonment with the Engineer. No such work shall be performed without the Engineer present to verify abandonment procedures.

Well Abandonment Procedure:

1. The well shall be plugged to prevent the entrance of surface water, circulation of water between or among producing zones, or any other process resulting in the contamination or pollution of groundwater resources.

2. The well shall be checked from land surface to the entire depth of the well before it is sealed to ensure against the presence of any obstruction that will interfere with sealing operations.

3. The well shall be filled and sealed with any of the following materials: neat cement grout, sand cement grout, bentonite clay grout, or sand clay or bentonite cement grout.

4. The grout material shall be placed in such a way to prevent voids in the grout or dilution of the grout.

5. The well shall be abandoned in such a manner that it does not become a channel for the vertical movement of water or other substance to the potable ground water resources.

6. Upon completion of abandonment of the well, the top of the casing and grout material shall not be terminated more than four feet below the ground surface of the final grade.

Within 30 days of completion of the well abandonment, the licensed well drilling contractor shall complete the DCP Well Abandonment, Verification of Work Completed Form, in accordance with CGS Section 25-131, and submit such form to the DCP, CTDEEP, local Health Department and the Engineer.

Method of Measurement:

Monitoring well abandonment will be measured for payment by the number of 2-inch groundwater monitoring wells abandoned at locations shown on the Plans and directed by the Engineer.

Basis of Payment:

This work will be paid for at the Contract unit price per well abandoned. Wells that are removed as a part of excavation that are not abandoned by a registered driller (i.e., wells up to 15 feet deep) will not be paid for under this item. This unit price shall include all equipment, materials and labor, including the furnishing of specialty services and specialized equipment, backfilling, excavation, and implementation of health and safety provisions incidental to the abandonment of the groundwater monitoring wells.

Pay Item	Pay Unit
2-Inch Groundwater Monitoring Well Abandonment	EA

ITEM #0202642A - ABANDONMENT OF WELLS

Description:

Work under this item shall consist of the abandonment of wells by a registered well driller at locations shown on the Plans or as directed by the Engineer. The well driller must be registered in the State of Connecticut.

Well abandonment shall conform to the requirements of the Connecticut Well Drilling Code (CGS Chapter 482 Well Drilling Section 25-126 through 137) and DCP Regulations for the Well Drilling Industry (25-128-1 through 64).

Materials:

The grout used to seal the wells shall be a bentonite cement grout complying with RCSA 25-128-36(E). The mix shall be comprised of one ninety-four (94) pound bag of portland cement, an equal volume of dry sand, and five to six gallons of water with ten percent (10%) bentonite added to reduce shrinkage. The Contractor shall not use admixtures to decrease the set time of the grout.

Construction Methods:

The Contractor shall submit the name of the registered driller and a copy of their Certificate of Registration, as indicated in the Connecticut Department of Consumer Protection Regulations Section 25-129, at least fourteen (14) days prior to starting well abandonment work.

An existing former product recovery well (12-inch diameter well as depicted on the Drawing ENV-002 of the Project Plans) shall be abandoned prior to the commencement of any earthwork. The Contractor shall coordinate the work of the well abandonment with the Engineer. No such work shall be performed without the Engineer present to verify abandonment procedures.

Wells shall be abandoned in accordance with the Connecticut Department of Consumer Protection Regulations, particularly Sections 25-128-56 and 25-128-57. In the event of any conflict between the regulations and this specification, the more stringent shall apply.

Well Abandonment Procedure:

1. The well shall be plugged to prevent the entrance of surface water, circulation of water between or among producing zones, or any other process resulting in the contamination or pollution of ground water resources.

2. The well shall be chlorinated prior to abandonment using a chlorine solution with a minimum concentration of 150 parts per million (ppm) of chlorine (0.36 ounces of bleach at 2.25% available chlorine to every gallon of water stored in the well).

3. The well shall be checked from land surface to the entire depth of the well before it is sealed to ensure against the presence of any obstruction that will interfere with sealing operations.

4. The well bore shall be completely filled and sealed with bentonite cement grout.

5. The grout material shall be placed in such a way to prevent voids in the grout or dilution of the grout.

6. Any test well or bore shall be abandoned in such a manner that it does not become a channel for the vertical movement of water or other substance to the potable ground water resources.

7. Upon completion of abandonment of the well, the top of the casing and grout material shall not be terminated more than four feet below the ground surface of the final grade.

Within 30 days of completion of the well abandonment, the licensed well drilling contractor shall complete the DCP Well Abandonment, Verification of Work Completed Form, in accordance with CGS Section 25-131, and submit such form to the DCP, CTDEEP, local Health Department and the Engineer.

Method of Measurement:

The measurement for payment under this Item will be in accordance with the terms and conditions as provided in Article 1.09.04 - Extra and Cost Plus Work.

The sum of money shown on the estimate and in the itemized proposal as “Estimated Cost” for this work will be considered the price bid even though payment will be made only for actual work performed. The estimated cost figure is not to be altered in any manner by the bidder. Should the bidder alter the amount shown, the altered figures will be disregarded and the original price will be used to determine the total amount bid for the Contract.

Basis of Payment:

The Abandonment of Wells will be paid for in accordance with Article 1.09.04 - Extra and Cost Plus Work, which shall include: all equipment, materials, tools and labor incidental to well abandonment, furnishing specialty services and specialized equipment, backfilling, excavation, and implementation of health and safety provisions incidental to the abandonment of the wells.

Pay Item	Pay Unit
Abandonment of Wells	Est.

ITEM #0969060A - CONSTRUCTION FIELD OFFICE, SMALL

Description: Under the item included in the bid document, adequate weatherproof office quarters with related furnishings, materials, equipment and other services, shall be provided by the Contractor for the duration of the work, and if necessary, for a close-out period determined by the Engineer. The office, furnishings, materials, equipment, and services are for the exclusive use of CTDOT forces and others who may be engaged to augment CTDOT forces with relation to the Contract. The office quarters shall be located convenient to the work site and installed in accordance with Article 1.08.02. This office shall be separated from any office occupied by the Contractor. Ownership and liability of the office quarters shall remain with the Contractor.

Furnishings/Materials/Supplies/Equipment: All furnishings, materials, equipment and supplies shall be in like new condition for the purpose intended and require approval of the Engineer.

Office Requirements: The Contractor shall furnish the office quarters and equipment as described below:

Description \ Office Size	Small	Med.	Large	Extra Large
Minimum Sq. Ft. of floor space with a minimum ceiling height of 7 ft.	400	400	1000	2000
Minimum number of exterior entrances.	2	2	2	2
Minimum number of parking spaces.	7	7	10	15

Office Layout: The office shall have a minimum square footage as indicated in the table above, and shall be partitioned as shown on the building floor plan as provided by the Engineer.

Tie-downs and Skirting: Modular offices shall be tied-down and fully skirted to ground level.

Lavatory Facilities: For field offices sizes Small and Medium the Contractor shall furnish a toilet facility at a location convenient to the field office for use by CTDOT personnel and such assistants as they may engage; and for field offices sizes Large and Extra Large the Contractor shall furnish two (2) separate lavatories with toilet (men and women), in separately enclosed rooms that are properly ventilated and comply with applicable sanitary codes. Each lavatory shall have hot and cold running water and flush-type toilets. For all facilities the Contractor shall supply lavatory and sanitary supplies as required.

Windows and Entrances: The windows shall be of a type that will open and close conveniently, shall be sufficient in number and size to provide adequate light and ventilation, and shall be fitted with locking devices, blinds and screens. The entrances shall be secure, screened, and fitted with a lock for which four keys shall be furnished. All keys to the construction field office shall be furnished to the CTDOT and will be kept in their possession while State personnel are using the office. Any access to the entrance ways shall meet applicable building codes, with appropriate handrails. Stairways shall be ADA/ABA compliant and have non-skid tread surfaces. An ADA/ABA compliant ramp with non-skid surface shall be provided with the Extra-Large field office.

Lighting: The Contractor shall equip the office interior with electric lighting that provides a minimum illumination level of 100 foot-candles at desk level height, and electric outlets for each desk and drafting table. The Contractor shall also provide exterior lighting that provides a minimum illumination level of 2 foot-candles throughout the parking area and for a minimum distance of 10 ft. on each side of the field office.

Parking Facility: The Contractor shall provide a parking area, adjacent to the field office, of sufficient size to accommodate the number of vehicles indicated in the table above. If a paved parking area is not readily available, the Contractor shall construct a parking area and driveway consisting of a minimum of 6 inches of processed aggregate base graded to drain. The base material will be extended to the office entrance.

Field Office Security: Physical Barrier Devices - This shall consist of physical means to prevent entry, such as: 1) All windows shall be barred or security screens installed; 2) All field office doors shall be equipped with dead bolt locks and regular day operated door locks; and 3) Other devices as directed by the Engineer to suit existing conditions.

Electric Service: The field office shall be equipped with an electric service panel, wiring, outlets, etc., to serve the electrical requirements of the field office, including: lighting, general outlets, computer outlets, calculators etc., and meet the following minimum specifications:

A. 120/240 volt, 1 phase, 3 wire
B. Ampacity necessary to serve all equipment. Service shall be a minimum 100 amp dedicated to the construction field office.
C. The electrical panel shall include a main circuit breaker and branch circuit breakers of the size and quantity required.
D. Additional 120 volt, single phase, 20 amp, isolated ground dedicated power circuit with dual NEMA 5-20 receptacles will be installed at each desk and personal computer table (workstation) location.
E. Additional 120 volt, single phase, 20 amp, isolated ground dedicated power circuit with dual NEMA 5-20 receptacles will be installed, for use by the Telephone Company.
F. Additional 120-volt circuits and duplex outlets as required meeting National Electric Code requirements.
G. One exterior (outside) wall mounted GFI receptacle, duplex, isolated ground, 120 volt, straight blade.
H. After work is complete and prior to energizing, the State's CTDOT electrical inspector, must be contacted at 860-594-2240. (Do Not Call Local Town Officials)
I. Prior to field office removal, the CTDOT Office of Information Systems (CTDOT OIS) must be notified to deactivate the communications equipment.

Heating, Ventilation and Air Conditioning (HVAC): The field office shall be equipped with sufficient heating, air conditioning and ventilation equipment to maintain a temperature range of 68°-80° Fahrenheit within the field office.

Telephone Service: The Contractor shall provide telephone service with unlimited nation-wide calling plan. For a Small, Medium and Large field office this shall consist of the installation of two (2) telephone lines: one (1) line for phone/voice service and one (1) line dedicated for the facsimile machine. For an Extra-Large field office this shall consist of four (4) telephone lines: three (3) lines for phone/voice service and one (1) line dedicated for facsimile machine. The Contractor shall pay all charges.

Data Communications Facility Wiring: Contractor shall install a Category 6 568B patch panel in a central wiring location and Cat 6 cable from the patch panel to each PC station, Smart Board location, Multifunction Laser Printer/Copier/Scanner/Fax, terminating in a (Category 6 568B) wall or surface mount data jack. The central wiring location shall also house either the data circuit with appropriate power requirements or a category 5 cable run to the location of the installed data circuit. The central wiring location will be determined by the CTDOT OIS staff in coordination with the designated field office personnel as soon as the facility is in place.

For Small, Medium and Large field offices the Contractor shall run a CAT 6 LAN cable a minimum length of 25 feet for each CTDOT networked device (including but not limited to: smartboards and Multi-Function Laser Printer/Copier/Scanner/Fax) to LAN switch area leaving an additional 10 feet of cable length on each side with terminated RJ45 connectors. For an Extra-Large field office the Contractor shall run CAT 6 LAN cables from workstations, install patch panel in data circuit demark area and terminate runs with RJ45 jacks at each device location. Terminate runs to patch panel in LAN switch area. Each run / jack shall be clearly labeled with an identifying Jack Number.

The Contractor shall supply cables to connect the Wi-Fi printer to the Contractor supplied internet router and to workstations/devices as needed. These cables shall be separate from the LAN cables and data Jacks detailed above for the CTDOT network.

The number of networked devices anticipated shall be at least equal to the number of personal computer tables, Multi-Function Laser Printer/Copier/Scanner/Fax, and smartboards listed below.

The installation of a data communication circuit between the field office and the CTDOT OIS in Newington will be coordinated between the CTDOT District staff, CTDOT OIS staff and the local utility company once the Contractor supplies the field office phone numbers and anticipated installation date. The Contractor shall provide the field office telephone number(s) to the CTDOT Project Engineer within 10 calendar days after the signing of the Contract as required by Article 1.08.02. This is required to facilitate data line and computer installations.

Additional Equipment, Facilities and Services: The Contractor shall provide at the field Office at least the following to the satisfaction of the Engineer:

Furnishing Description	Office Size			
	Small	Med.	Large	Extra Large
	Quantity			
Office desk (2.5 ft. x 5 ft.) with drawers, locks, and matching desk chair that have pneumatic seat height adjustment and dual wheel casters on the base.	1	3	5	8
Standard secretarial type desk and matching desk chair that has pneumatic seat height adjustment and dual wheel casters on the base.	-	-	-	1
Personal computer tables (4 ft. x 2.5 ft.).	2	3	5	8
Drafting type tables (3 ft. x 6 ft.) and supported by wall brackets and legs; and matching drafters stool that have pneumatic seat height adjustment, seat back and dual wheel casters on the base.	1	1	1	2
Conference table, 3 ft. x 12 ft.	-	-	-	1
Table – 3 ft. x 6 ft.	-	-	-	1
Office Chairs.	2	4	8	20
Mail slot bin – legal size.	-	-	1	1
Non-fire resistant cabinet.	-	-	2	4
Fire resistant cabinet (legal size/4 drawer), locking.	1	1	2	3
Storage racks to hold 3 ft. x 5 ft. display charts.	-	-	1	2
Vertical plan racks for 2 sets of 2 ft. x 3 ft. plans for each rack.	1	1	2	2
Double door supply cabinet with 4 shelves and a lock – 6 ft. x 4 ft.	-	-	1	2
Case of cardboard banker boxes (Min 10 boxes/case)	1	1	2	3
Open bookcase – 3 shelves – 3 ft. long.	-	-	2	2
White Dry-Erase Board, 36” x 48”min. with markers and eraser.	1	1	1	1
Interior partitions – 6 ft. x 6 ft., soundproof type, portable and freestanding.	-	-	6	6
Coat rack with 20 coat capacity.	-	-	-	1
Wastebaskets - 30 gal., including plastic waste bags.	1	1	1	2
Wastebaskets - 5 gal., including plastic waste bags.	1	3	6	10
Electric wall clock.	-	-	-	2
Telephone.	1	1	1	-
Full size stapler 20 (sheet capacity, with staples)	1	2	5	8
Desktop tape dispensers (with Tape)	1	2	5	8
8 Outlet Power Strip with Surge Protection	3	4	6	9

Rain Gauge	1	1	1	1
Business telephone system for three lines with ten handsets, intercom capability, and one speaker phone for conference table.	-	-	-	1
Mini refrigerator - 3.2 c.f. min.	1	1	1	1
Hot and cold water dispensing unit. Disposable cups and bottled water shall be supplied by the Contractor for the duration of the project.	1	1	1	1
Microwave, 1.2 c.f. , 1000W min.	1	1	1	1
Fire extinguishers - provide and install type and *number to meet applicable State and local codes for size of office indicated, including a fire extinguisher suitable for use on a computer terminal fire.	*	*	*	*
Electric pencil sharpeners.	1	2	2	2
Electronic office type printing calculators capable of addition, subtraction, multiplication and division with memory and a supply of printing paper.	1	1	2	4
Small Multi-Function Laser Printer/Copier/Scanner/Fax combination unit, network capable, as specified below under Computer Related Hardware and Software.	1	1		
Large Multi-Function Laser Printer/Copier/Scanner/Fax combination unit, network capable, as specified below under Computer Related Hardware and Software.			1	1
Field Office Wi-Fi Connection as specified below under Computer Related Hardware and Software	1	1	1	1
Wi-Fi Printer as specified below under Computer Related Hardware and Software.	1	1	1	1
Digital Camera as specified below under Computer Related Hardware and Software.	1	1	3	3
Video Projector as specified below under Computer Related Hardware and Software.	-	-	-	1
Smart Board as specified below under Computer Related Hardware and Software.	-	-	-	1
Infrared Thermometer, including annual third party certified calibration, case, and cleaning wipes.	1	1	1	2
Concrete Curing Box as specified below under Concrete Testing Equipment.	1	1	1	1
Concrete Air Meter and accessories as specified below under Concrete Testing Equipment as specified below. Contractor shall provide third party calibration on a quarterly basis.	1	1	1	1
Concrete Slump Cone and accessories as specified below under Concrete Testing Equipment.	1	1	1	1

First Aid Kit	1	1	1	1
Flip Phones as specified under Computer Related Hardware and Software.	-	-	-	-
Smart Phones as specified under Computer Related Hardware and Software.	-	-	-	-

The furnishings and equipment required herein shall remain the property of the Contractor. Any supplies required to maintain or operate the above listed equipment or furnishings shall be provided by the Contractor for the duration of the project.

Computer Related Hardware and Software: The CTDOT will supply by its own means the actual Personal Computers for the CTDOT representatives. The Contractor shall supply the Field Office Wi-Fi Connection, Wi-Fi Printer, Digital Camera(s), Flip Phones, Smart Phones, Multifunction Laser Printer/Copier/Scanner/Fax, Video Projectors, and Smart Board(s) as well as associated hardware and software, must meet the requirements of this specification as well as the latest minimum specifications posted, as of the project advertising date, at CTDOTs web site http://www.ct.gov/dot/cwp/view.asp?a=1410&q=563904

Within 10 calendar days after the signing of the Contract but before ordering/purchasing the Wi-Fi Printer (separate from the Multifunction Laser Printer/Copier/Scanner/Fax), Field Office Wi-Fi, Digital Camera(s), Flip Phones, Smart Phones, Multifunction Laser Printer/Copier/Scanner/Fax, Video Projector(s) and Smart Board(s) as well as associated hardware, the Contractor must submit a copy of their proposed order(s) with catalog cuts and specifications to the Administering CTDOT District for review and approval. The Wi-Fi Printer, Wi-Fi Router, Flip Phones, Smart Phones, digital cameras, Projector(s) and Smart Board(s) will be reviewed by CTDOT District personnel. The Multifunction Laser Printer/Copier/Scanner/Fax will be reviewed by the CTDOT OIS. The Contractor shall not purchase the hardware, software, or services until the Administering CTDOT District informs them that the proposed equipment, software, and services are approved. The Contractor will be solely responsible for the costs of any hardware, software, or services purchased without approval.

The Contractor and/or their internet service provider shall be responsible for the installation and setup of the field office Wi-Fi, Wi-Fi printer, and the configuration of the wireless router as directed by the CTDOT. Installation will be coordinated with CTDOT District and Project personnel.

After the approval of the hardware and software, the Contractor shall contact the designated representatives of the CTDOT administering District, a minimum of 2 working days in advance of the proposed delivery or installation of the Field Office Wi-Fi Connection, Wi-Fi Printer, Digital Camera(s), Flip Phones, Smart Phones, Multifunction Laser Printer/Copier/Scanner/Fax, Video Projectors and Smart Board(s), as well as associated hardware, software, supplies, and support documentation.

The Contractor shall provide all supplies, paper, maintenance, service and repairs (including labor and parts) for the Wi-Fi printers, copiers, field office Wi-Fi, fax machines and other equipment and facilities required by this specification for the duration of the Contract. All repairs must be

performed with-in 48 hours. If the repairs require more than a 48 hours then an equal or better replacement must be provided.

Once the Contract has been completed, the hardware and software will remain the property of the Contractor.

First Aid Kit: The Contractor shall supply a first aid kit adequate for the number of personnel expected based on the size of the field office specified and shall keep the first aid kit stocked for the duration that the field office is in service.

Rain Gauge: The Contractor shall supply install and maintain a rain gauge for the duration of the project, meeting these minimum requirements. The rain gauge shall be installed on the top of a post such that the opening of the rain gauge is above the top of the post an adequate distance to avoid splashing of rain water from the top of the post into the rain gauge. The Location of the rain gauge and post shall be approved by the Engineer. The rain gauge shall be made of a durable material and have graduations of 0.1 inches or less with a minimum total column height of 5 inches. If the rain gauge is damaged the Contractor shall replace it prior to the next forecasted storm event at no additional cost.

Concrete Testing Equipment: If the Contract includes items that require compressive strength cylinders for concrete, in accordance with the Schedule of Minimum Testing Requirements for Sampling Materials for Test, the Contractor shall provide the following equipment.

A) Concrete Cylinder Curing Box – meeting the requirements of Section 6.12 of the Standard Specifications.

B) Air Meter – The air meter provided shall be in good working order and meet the requirements of AASHTO T 152.

C) Slump Cone Mold – Slump cone, base plate, and tamping rod shall be provided in like-new condition and meet the requirements of AASHTO T119, Standard Test Method for Slump of Hydraulic-Cement Concrete.

All testing equipment will remain the property of the Contractor at the completion of the project.

Insurance Policy: The Contractor shall provide a separate insurance policy, with no deductible, in the minimum amount of five thousand dollars ($5,000) in order to insure all State-owned data equipment and supplies used in the office against all losses. The Contractor shall be named insured on that policy, and the CTDOT shall be an additional named insured on the policy. These losses shall include, but not be limited to: theft, fire, and physical damage. The CTDOT will be responsible for all maintenance costs of CTDOT owned computer hardware. In the event of loss, the Contractor shall provide replacement equipment in accordance with current CTDOT equipment specifications, within seven days of notice of the loss. If the Contractor is unable to provide the required replacement equipment within seven days, the CTDOT may provide replacement equipment and deduct the cost of the equipment from monies due or which may become due the

Contractor under the Contract or under any other contract. The Contractor's financial liability under this paragraph shall be limited to the amount of the insurance coverage required by this paragraph. If the cost of equipment replacement required by this paragraph should exceed the required amount of the insurance coverage, the CTDOT will reimburse the Contractor for replacement costs exceeding the amount of the required coverage.

Maintenance: During the occupancy by the CTDOT, the Contractor shall maintain all facilities and furnishings provided under the above requirements, and shall maintain and keep the office quarters clean through the use of weekly professional cleaning to include, but not limited to, washing & waxing floors, cleaning restrooms, removal of trash, etc. Exterior areas shall be mowed and clean of debris. A trash receptacle (dumpster) with weekly pickup (trash removal) shall be provided. Snow removal, sanding and salting of all parking, walkway, and entrance ways areas shall be accomplished during a storm if on a workday during work hours, immediately after a storm and prior to the start of a workday. If snow removal, salting and sanding are not completed by the specified time, the State will provide the service and all costs incurred will be deducted from the next payment estimate.

Method of Measurement: The furnishing and maintenance of the construction field office will be measured for payment by the number of calendar months that the office is in place and in operation, rounded up to the nearest month.

There will not be any price adjustment due to any change in the minimum computer related hardware and software requirements.

Basis of Payment: The furnishing and maintenance of the Construction Field Office will be paid for at the Contract unit price per month for "Construction Field Office, (Type)," which price shall include all material, equipment, labor, service contracts, licenses, software, repair or replacement of hardware and software, related supplies, utility services, parking area, external illumination, trash removal, snow and ice removal, and work incidental thereto, as well as any other costs to provide requirements of this specified this specification.

Pay Item	Pay Unit
Construction Field Office, (Type)	Month

ITEM #0999002A - DISPOSAL OF BUILDINGS

Description:

Work under this item shall include all activities related to the deconstruction/demolition and recycling/disposal of indicated structures at the Litchfield Maintenance Facility, as detailed in this specification and as shown on the Contract Plans. Specifically, the deconstruction/demolition is to be performed on an existing groundwater remediation/treatment system as depicted on Drawing ENV-002 of the Project Plans. The remediation system to be demolished consists of a mobile trailer equipped with an air sparge system (compressor, etc.), soil vapor extraction (SVE) system (blower, etc.), a water tank, a transfer pump, a 200-pound capacity granular activated carbon (GAC) water treatment vessel, and the associated piping, plumbing, electrical components, and other appurtenances. Additional system components to be demolished, located outside of the trailer, include two 600-pound capacity GAC vapor treatment vessels, system piping and plumbing, air sparge and SVE wells, and electrical components. Demolition activities shall also include the removal and disposal of the remediation system's perimeter fencing and concrete pad, and the deactivation and removal of the electrical service, to be terminated at the utility pole as indicated on the Project Drawings.

The work shall be performed by an experienced firm that has successfully completed deconstruction/demolition work similar to that indicated herein. All activities shall be performed in accordance with USEPA 40 CFR Parts 260-268, 280 and 281, OSHA 29 CFR 1926, OSHA 29 CFR 1910.120, CTDEEP 22a-449(d)-1 and 22a-449(c), NFPA 70 – National Electrical Code, and all other applicable state and federal regulations and codes.

The GAC stored in the three aforementioned vessels shall be removed and properly disposed at an approved treatment/recycling/disposal facility in accordance with Item No. 0101143A, "Handling and Disposal of Regulated Items."

Materials:

Backfill and turf reestablishment materials shall conform to the requirements of Sections 2.13, 9.34 and 9.50 of the Specifications.

Construction Methods:

(1) Pre-Excavation and Removal Submittals:

(a) At least fifteen (15) working days prior to the start of any deconstruction/demolition work, the Contractor shall submit the following to the Engineer for review and approval:

1. Copy of the electrician's State of Connecticut issued Electrical License.
2. Copies of OSHA Construction Safety and HAZWOPER training documentation.

3. Work Plan addressing proposed decommissioning/demolition procedures to be used for each aspect of the work.
4. Proposed C&D bulky waste disposal facility.
5. Proposed steel/scrap metal recycling facility.

(2) General Provisions:

Deconstruction/demolition shall include removing all the electrical and mechanical components (e.g., motorized equipment, tanks, plumbing, etc.) within the equipment trailer. Components with electric motors (e.g., SVE blower, air compressor, and water transfer pump) and the empty trailer shall be salvaged and presented to the Department. Unless specified otherwise, the Contractor shall be responsible for moving this equipment to designated areas, but not for relocation off-site. The remaining components of the remediation system shall be deconstructed/demolished and properly disposed/recycled.

The Contractor shall not perform any deconstruction/demolition work until such time that all electrical service to the remediation system has been completely terminated from the point of entry (i.e., utility pole).

Removal of the system's plumbing segments that are outside of the designated excavation area, as shown on the Project Plans, is included in this item. Note that the portions of the remediation system's well and piping/plumbing network shall be removed during the excavation of Controlled Materials. The air sparge and SVE wells located outside of the excavation area shall be properly abandoned in accordance with Item No. 0202640A, "2-inch Groundwater Monitoring Well Abandonment" and/or Item No. 0202642A Abandonment of Wells" prior to any earth excavation activities.

De-energizing the remediation system, and disconnection as needed for removal of the electrical service shall be completed by a State licensed electrician. The Contractor shall arrange for the disconnection with the utility company, as required, and shall ensure service to the operating facility or adjacent facilities is not disrupted, except when authorized in writing by authorities having jurisdiction and the Engineer. The overhead wire extending from the utility pole to the remediation system shall be removed.

Unless specified and approved otherwise, the Contractor shall completely remove the remediation system's concrete pad, above and below grade remediation system piping/plumbing, and perimeter fencing. The slab shall be removed in a manner which adequately protects existing underground utilities from damage. Concrete shall be removed and broken up as required for disposal/recycling. Resulting excavations and below grade voids shall be properly backfilled as specified. The Contractor shall not allow any holes or openings to remain uncovered as a result of deconstruction/demolition activity. Prior to placement of fill materials, areas to be filled shall be free of standing water, frost, frozen material, trash and debris. Construction debris, excluding clean fill, shall not be used as fill within the project limits and shall be properly disposed of in accordance with applicable regulations. After fill placement and

compaction, the Contractor shall grade the surface to meet adjacent contours and allow flow to surface drainage structures. Grading shall not create any depressions that can retain water, create any diversions to surface flow, or block the intended flow of surface water. Restoration of disturbed areas resulting from the demolition of the groundwater treatment system not covered under separate Items shall be completed in accordance with Sections 2.13, 9.34 and 9.50 of the Specifications

The work under this Item includes surface restoration for incidental areas disturbed by the Contractor's operation that are not otherwise specifically identified in the project specifications and plans as areas to be restored. This may include turfed, landscaped, or paved areas.

Employees performing on-site deconstruction/demolition related activity shall have attended an OSHA 10-hour Occupational Safety and Health Training Course in Construction Safety & Health, or equivalent, shall have completed 40-hour OSHA HAZWOPER training, and shall have completed associated 8-hour refresher training as required. Documentation of training shall be provided prior to initiation of the work.

The Contractor shall prevent damage to any existing utilities, structures, equipment and appurtenances that are to remain in service. Repair/replacement of items damaged as a result of failure to implement proper protections shall be at the Contractor's sole expense.

The Contractor shall exercise all necessary precautions for fire prevention. Acceptable fire extinguishers shall be made available at all times. Use of explosives or blasting for deconstruction/demolition purposes will not be permitted. No burning or flame/torch cutting will be permitted. Restrictions or prohibitions on smoking shall be explicitly addressed in the site health and safety plan and/or work plan. Smoking, if allowed on the project, shall only be allowed in approved areas specifically designated for that purpose and clearly identified in the plan(s).

The Contractor shall use the methods of deconstruction/demolition required to complete the work in accordance with all codes, ordinances and requirements of governing authorities. Deconstruction/demolition practices shall be acceptable to the Engineer, shall ensure the safety of persons, equipment and structures which are to remain, and shall provide adequate protection of the environment. Methods shall be utilized which minimize the spread of dust and flying particles and to provide safe working conditions for personnel.

If hazardous materials not previously identified as part of this contract are encountered during demolition operations, the Contractor shall immediately notify the Engineer. The Contractor shall also comply with applicable laws and regulations regarding removal, handling, disposal, and protection against exposure.

Damage to facilities caused by demolition operations shall be promptly repaired. The Contractor shall not close or obstruct streets, walks, or other occupied or used facilities without permission from the Engineer and local authorities.

The submitted Work Plan shall be subject to approval by the Engineer and shall address pertinent aspects of the work, including, but not limited to: sequence of decommissioning/demolition activities; confirmation of zero stored energy (electrical, pneumatic, etc.); cutting procedures; methods to monitor for the presence of flammable/explosive atmospheres in tanks, piping, etc.; methods of purging, ventilating, or inerting, as required; methods of decontamination of equipment and personnel; containerization of wash water, as applicable; and methods of protecting existing utilities, including drain piping below the slab.

The Contractor shall dispose or recycle materials off-site in accordance with the Specifications and all applicable Federal, State and local regulations. A copy of the shipping paper for each load of material shipped off-site for disposal/recycling, including the weight of the load as measured at the disposal/recycling facility shall be returned to the Engineer.

Scrap metal generated during the demolition process shall be recycled as scrap metal at an approved scrap metal recycling facility. Aboveground storage tanks (ASTs)/vessels shall be cleaned prior to recycling/disposal. Disposal of any contents of the ASTs/vessels shall be in accordance with Item 0101143A.

Any items not designated for salvage in the project documents but that are of salvageable value to the Contractor may be removed as work progresses. The Contractor shall transport its salvaged items from site as they are removed. Storage or sale of such items will not be permitted on-site. No requests for additional time will be considered based on delays caused by the Contractor's salvage work.

(3) Post-Demolition Submittals:

The Contractor shall provide the Engineer, within 30 days of completion of the deconstruction/demolition work, a compliance package which shall include, but not be limited to, the following:

1. Shipping papers from the approved solid waste bulky waste disposal/recycling facility indicating receipt and acceptance of C&D bulky waste debris.

2. Shipping papers and Certificates of Destruction/Recycling from the approved scrap metal recycling facility indicating receipt and acceptance of scrap metal debris (tanks/vessels, piping, etc.).

Method of Measurement:

The Contractor shall submit a lump sum bid price for "Disposal of Buildings" complete. Materials associated with the excavation, removal and disposal of the groundwater treatment system, such as permits, equipment, disposal, borrow material, etc., will not be measured for

payment. Completion of all items associated with the lump sum price for the work will be confirmed by the Project Engineer.

Basis of Payment:

This work shall be paid for at the associated Contract lump sum price. The associated lump sum bid price shall include all related necessary labor, equipment and materials required to complete the indicated scope of work, including permitting (as required), excavation, disposal/recycling, backfill, dust suppression, etc. Once the work has been completed to the satisfaction of the Engineer, and required documents have been received in their entirety, final payment to the Contractor will be made. No additional payment will be made under this Item.

Pay Item	Pay Unit
Disposal of Buildings	LS

END OF SECTION

ITEM #1600002A - FUEL ADJUSTMENT COST

Description: This Item is included in the Contract to reimburse the Contractor for purchasing gasoline, diesel fuel, and fuel oil as required to support Contract work. Refer to the CSI Sections referenced below for additional information in this regard.

Motor Fuel Island: CSI Section 132160, "Installation of New Fuel Facility."
Fuel Oil: CSI Section 231113, "Facility Fuel-Oil Piping."

Materials: The Contractor shall provide fuels that conform to the requirements of the referenced CSI Sections. A sample from each tanker shall be tested to confirm the product's conformance to the Contract requirements UNLESS the fuel is supplied by one of the Department's current fuel vendors. The sample shall be taken in the presence of the Engineer.

Construction Methods: The Contractor shall fill all tanks to 90% of the rated capacity. The fuel shall remain in the storage tanks and shall become the property of the Engineer upon the acceptance of the Project. The Contractor is responsible for the fuel, including any leaks and spills until the Engineer accepts the Project.

Method of Measurement: The work and materials shall be measured for payment as provided for under Article 1.04.05 Extra Work.

The sum of money shown on the estimate and in the itemized proposal as "Estimated Cost" for this work will be considered the price bid even though payment will be made only for actual work performed. The estimated cost figure is not to be altered in any manner by the bidder. Should the bidder alter the amount shown, the altered figure will be disregarded and the original price will be used to determine the total amount for the contract.

Basis of Payment: This work will be paid as Extra Work.

Pay Item	Pay Unit
Fuel Adjustment Cost	Estimated Cost

ITEM #1700001A - SERVICE CONNECTIONS (ESTIMATED COST)

Description: This work shall consist of disconnection, alteration and reconnection of those existing utility services owned by property owners at locations necessary to complete this project and as ordered by the Engineer. This work shall include the coordination with the affected utility companies and customers. Any damage caused by the Contractor or Subcontractors, as determined by the Engineer, shall be corrected by the Contractor in accordance with this specification.

Materials: All materials shall be provided by the Contractor and shall meet the current standards of the affected service.

Construction Methods: The Contractor shall perform all work in coordination with the Utility Company and affected property owner and as directed by the Engineer. Certain work may require use of a licensed and/or certified tradesman when such work is required by local and/or state codes.

Any utility customer's service interruption shall be done in a way that minimizes adverse impacts to the customer and affected utility.

Any work and materials supplied by the utility companies shall be on a billable basis to the Contractor.

Method of Measurement: The work and materials shall be measured for payment as provided for under Article 1.04.05 Extra Work.

The sum of money shown on the estimate and in the itemized proposal as "Estimated Cost" for this work will be considered the price bid even though payment will be made only for actual work performed. The estimated cost figure is not to be altered in any manner by the bidder. Should the bidder alter the amount shown, the altered figure will be disregarded and the original price will be used to determine the total amount for the contract.

Corrective work required to repair damage caused by the Contractor or its Subcontractors shall not be measured for payment.

Basis of Payment: This work will be paid as Extra Work.

Pay Item	Pay Unit
Service Connections (Estimated Cost)	Estimated Cost

INDEX OF CSI-FORMATTED SPECIFICATIONS
AND CORRESPONDING ITEM NUMBER
MAINTENANCE FACILITY TANK REPLACEMENT AT LITCHFIELD, CONNECTICUT
STATE PROJECT NO. 73-190

Item #	CSI Sect.	Description of Item
		DIVISION 1 – GENERAL REQUIREMENTS
0177150A	013233	PHOTOGRAPHIC DOCUMENTATION
0177150A	017000	CONSTRUCTION STAKING
		DIVISION 3 - CONCRETE
0177150A	033000	CAST-IN-PLACE CONCRETE
		DIVISION 7 – THERMAL AND MOISTURE PROTECTION
0177150A	079200	JOINT SEALANTS
		DIVISION 13 - SPECIAL CONSTRUCTION
0177150A	132160	INSTALLATION OF NEW FUEL FACILITY
0177150A	132180	TANK MONITORING SYSTEM
		DIVISION 23 – HEATING, VENTILATING AND AIR CONDITIONING
0177150A	230517	SLEEVES AND SLEEVE SEALS FOR HVAC PIPING
0177150A	230529	HANGERS AND SUPPORTS FOR HVAC PIPING AND EQUIPMENT
0177150A	230533	HEAT TRACING FOR HVAC PIPING
0177150A	230553	IDENTIFICATION FOR HVAC PIPING AND EQUIPMENT
0177150A	230719	HVAC PIPING INSULATION
0177150A	231113	FACILITY FUEL-OIL PIPING
		DIVISION 26 - ELECTRICAL
0177150A	260519	LOW-VOLTAGE ELECTRICAL POWER CONDUCTORS AND CABLES
0177150A	260526	GROUNDING AND BONDING FOR ELECTRICAL SYSTEMS
0177150A	260529	HANGERS AND SUPPORTS FOR ELECTRICAL

		SYSTEMS
0177150A	260533	RACEWAYS AND BOXES FOR ELECTRICAL SYSTEMS
0177150A	260543	UNDERGROUND DUCTS AND RACEWAYS FOR ELECTRICAL SYSTEMS
0177150A	260544	SLEEVES AND SLEEVE SEALS FOR ELECTRICAL RACEWAYS AND CABLING
0177150A	260553	IDENTIFICATION FOR ELECTRICAL SYSTEMS
0177150A	262416	PANELBOARDS
0177150A	262713	ELECTRICITY METERING
0177150A	262726	WIRING DEVICES
0177150A	262813	FUSES
0177150A	262816	ENCLOSED SWITCHES AND CIRCUIT BREAKERS
0177150A	265600	EXTERIOR LIGHTING

DIVISION 27 - COMMUNICATIONS

0177150A	270000	PREMISES TELEPHONE WIRING

DIVISION 30 – SITE WORK

0177150A	300000	FORM 817 SITE WORK
0177150A	300500	TEMPORARY MAINTENANCE WORK AREA
0177150A	302000	GENERAL SITE WORK
0177150A	304000	FENCING AND GATES
0177150A	305000	TURF ESTABLISHMENT
0177150A	307000	SANITARY/ DRAINAGE

SECTION 013233 - PHOTOGRAPHIC DOCUMENTATION

PART 1 - GENERAL

1.1 SUMMARY:

A. Section includes administrative and procedural requirements for the following:

1. Preconstruction photographs.
2. Periodic construction photographs.
3. Final completion construction photographs.

1.2 INFORMATIONAL SUBMITTALS:

A. At the Preconstruction Meeting, submit to the Engineer for approval the name of the photographer who will be responsible for taking the photographs during construction.

1.3 PHOTOGRAPHIC DOCUMENTATION SUBMITTALS:

A. Transmittal of Submittals: The zipped folder submittal package shall be uploaded into ProjectWise “01.0 – Projects-Active” under the subfolder “151_Project Photos” under the project number main folder. The specific work flow to do so will be distributed at the Preconstruction Meeting.

1. The Contractor shall attribute the submittal packages in ProjectWise using the following the following attributes and naming conventions:

   a. Discipline: CTR
   b. Main Category: CONTRACTOR
   c. Sub Category: PROGRESS PHOTOS
   d. Label: “Project Number - Progress Photos #XX - Date”
   e. Description: “Progress Photos #XX – Date”

2. After uploading photographic documentation, the Contractor shall provide e-mail notification to submittal reviewers and other key personnel at their business e-mail address that the submittals have been uploaded and are available for review. The Contractor shall provide a web link to the zipped folder submittal within their e-mail notification. The Contractor shall include the following information in the notification e-mail subject line in this order: “Project Number - Progress Photos #XX - Date”.

B. Digital Photographs: Submit image files within 7 days of taking photographs.

1. Include copy of key plan with each photograph submittal of Project site and building with notation of vantage points marked for location and direction of each photograph. Include same information as corresponding photographic documentation.

1.4 QUALITY ASSURANCE:

A. Photographer Qualifications: An individual who has been regularly engaged as a professional photographer of construction projects for not less than 3 years.

1.5 FORMATS AND MEDIA:

A. Digital Photographs: Provide color images in JPG format, produced by a digital camera with minimum sensor size of 12 megapixels, and at an image resolution of not less than 3200 by 2400 pixels, and with vibration-reduction technology. Use flash in low light levels or backlit conditions.

B. Digital Images: Submit digital media as originally recorded in the digital camera, without alteration, manipulation, editing, or modifications using image-editing software.

1.6 CONSTRUCTION PHOTOGRAPHS:

A. Photographer: Engage a qualified photographer to take construction photographs.

B. General: Take photographs with maximum depth of field and in focus.

1. Maintain key plan with each set of construction photographs that identifies each photographic location.

C. Preconstruction Photographs: Before commencement of Project Work, take photographs of Project site and surrounding properties, including existing items to remain during construction, from different vantage points, as directed by the Engineer.

1. Flag construction limits before taking construction photographs.
2. Take 12 photographs to show existing conditions adjacent to property before starting the Work.
3. Take 12 photographs of existing buildings either on or adjoining property to accurately record physical conditions at start of construction.
4. Take additional photographs as required to record settlement or cracking of adjacent structures, pavements, and improvements.

D. Periodic Construction Photographs: Take 12 photographs monthly coinciding as closely as possible with the completion of a major construction phase. Select vantage points to show status of construction and progress since last photographs were taken. Prior to taking any photographs review the proposed vantage points with the Engineer.

1. Photographs are for a record of the progress of work. Therefore, they shall be taken at a maximum interval of one month, whether or not they show any completion of work performed during the preceding month.

E. Final Completion Construction Photographs: Take 12 photographs after the date of Substantial Completion for submission as Project Record Documents. The Engineer will inform photographer of desired vantage points.

F. Additional Photographs: The Engineer may request photographs in addition to periodic photographs specified. Additional photographs will be paid for by Change Order and are not included in the Contract Sum.

1. Three days' notice will be given, where feasible.
2. In emergency situations, take additional photographs within 24 hours of request.
3. Circumstances that could require additional photographs include, but are not limited to, the following:

    a. Special events planned at Project site.
    b. Immediate follow-up when on-site events result in construction damage or losses.
    c. Photographs to be taken at fabrication locations away from Project site. These photographs are not subject to unit prices or unit-cost allowances.
    d. Substantial Completion of a major phase or component of the Work.
    e. Extra record photographs at time of final acceptance.
    f. Owner's request for special publicity photographs.

PART 2 - PRODUCTS (Not Used)

PART 3 - EXECUTION (Not Used)

END OF SECTION 013233

SECTION 017000 – CONSTRUCTION STAKING

PART 1 - GENERAL

1.1 SUMMARY:

A. The Contractor shall perform, including related administrative and procedural requirements, the following: construction layout and staking, field engineering and surveying, utility locations, general support services related to proposed construction methodology involving structural integrity or personnel safety, and civil engineering services.

B. Engage a Land Surveyor licensed in the State of Connecticut who is experienced in providing land-surveying services of the kind indicated.

C. Engage a Professional Engineer of the discipline required, licensed in the State of Connecticut, to perform engineering services of the kind indicated.

1.2 SUBMITTALS:

A. Submit a certificate signed by the Contractor and co-signed by a Land Surveyor or Professional Engineer certifying that the location and elevation of improvements comply with the Contract.

B. Submit a record of Project work performed and project data as required under provisions of Form 817 Article 1.20-1.08.14.

PART 2 - PRODUCTS

2.1 MATERIALS:

A. Project Record Drawings: Appropriate scale reproducible final drawings shall be submitted to the Engineer. Drawings shall conform to an “Existing Building Location Survey” with a Class T-2 accuracy standard in accordance with the Connecticut General Statues, Section 20-300b.

PART 3 - EXECUTION

3.1 EXECUTION:

A. The existence and location of underground and other utilities and construction indicated as existing are not guaranteed. Before beginning site work, investigate and verify the existence and location of underground utilities and other construction affecting the work. Furnish location data for Project work that must be performed by public utilities serving the Project Site.

B. Furnish information that is necessary to adjust, move or relocate existing structures, utility poles, lines, services, or other utility appurtenances located in or affected by construction. Coordinate with authorities having jurisdiction.

C. The existing benchmarks, control points and property corners are shown on the plans.

D. Verify layout information shown on the plans, in relation to the control points and existing benchmarks before proceeding to layout the Project work. Notify the Engineer if discrepancies are discovered. Locate existing permanent benchmarks, control points, and similar reference points before beginning Project work. Preserve and protect permanent benchmarks and control points during construction operations. Do not change or relocate benchmarks or control points without the Engineer’s prior written approval. Promptly report lost or destroyed control points, or the need to relocate permanent benchmarks or control points because of necessary changes in grades or locations. Promptly replace lost or destroyed benchmarks and control points. Base replacements on the original survey control points.

E. Establish and maintain a minimum of (2) permanent benchmarks on the Project Site, referenced to data established by survey control points. Comply with authorities having jurisdiction for type and size of benchmark. Record benchmark locations, with horizontal and vertical data, on Project Record Documents. Provide temporary reference points sufficient to locate the work where the actual location or elevation of layout points cannot be marked. Remove temporary reference points when no longer needed. Restore marked construction to its original condition.

F. Construction methodology shall be the Contractor's sole responsibility including the cost of using engineering services and recommendations as necessary. Inform the Engineer of any anticipated or encountered problems in construction methodology. Proceed with work only when such problems are fully resolved by the Contractor, using such engineering support services as required.

G. Work from lines and levels established by the control survey. Establish benchmarks and control points to set lines and levels at each area of construction as needed to locate each element of the Project. Calculate and measure required dimensions within indicated or recognized tolerances. Do not scale plans to determine dimensions. Advise entities engaged in construction activities, of marked lines and levels provided for their use. As construction proceeds, check every major element for line, level and plumb.

H. Locate and lay out site improvements, including pavements, stakes for grading, fill and topsoil placement, utility slopes and invert elevations by instrumentation and similar appropriate means. The Contractor shall identify and document by survey the extent, elevation, and location of all foundations and capped utilities to be left in place and backfilled. Appropriate scaled marked up drawings shall be furnished to the Engineer PRIOR to backfilling.

I. Locate and lay out control lines and levels for structures, building foundations, column grids and locations, floor levels including those required for mechanical and electrical work. Transfer survey markings and elevations for use with control lines and levels. Level foundations and piers from (2) or more locations.

J. Maintain a surveyor's log of control and other survey work. Make this log available to the Engineer for reference. Record deviations from required lines and levels, and advise the Engineer when deviations that exceed indicated or recognized tolerances are detected. On Project Record Drawings, record deviations that are accepted by the Engineer and not corrected. Record the location of utilities at the time of installation in the log as well as on mylar for permanent record. The recording Land Surveyor shall place its registration seal and accuracy statement regarding location of exterior underground utility lines on the utility plans of As-Built tracings.

END OF SECTION 017000

SECTION 033000 - CAST-IN-PLACE CONCRETE

PART 1 - GENERAL

1.1 SUMMARY:

A. This Section specifies cast-in-place concrete, including formwork, reinforcement, concrete materials, mixture design, placement procedures, and finishes.

B. Related CSI Sections include the following:

1. Division 07 Section 079200, "Joint Sealants" for expansion joints, perimeter isolation joints and joint sealants for floor and wall joints.

1.2 SUBMITTALS:

A. Submit the following in accordance with Form 817 Article 1.20-1.05.02 and NOTICE TO CONTRACTOR – SUBMITTALS.

B. Product Data: For proprietary materials and items, including reinforcement and forming accessories, admixtures, joint systems, curing compounds, colored hardener and others if requested by the Designer.

C. Shop Drawings: For reinforcement detailing fabricating, bending, and placing concrete reinforcement. Comply with ACI 315 Detailing Manual – SP-66(94) showing bar schedules and arrangement of concrete reinforcement. Include special reinforcing required for openings through concrete structures. For slabs with mechanically-connected steel reinforcement, indicate anchors and inserts locations, proposed locations of all control, expansion and construction joints not otherwise shown on the plans.

D. Quality Assurance Submittals:

1. Laboratory test reports for concrete materials and mix design test.
2. Material certificates in lieu of material laboratory test reports when permitted by Engineer. Material certificates shall be signed by manufacturer and Contractor, certifying that each material item complies with or exceeds specified requirements. Provide certification from admixture manufacturers that chloride content complies with specification requirements.
3. Evidence that concrete materials have been tested and the test results are on file with the State of Connecticut Department of Transportation Laboratory.
4. Certified Materials Test Reports for each lot of reinforcement showing that it complies with ASTM A 615.

1.3 QUALITY ASSURANCE:

A. Codes and Standards: Comply with provisions of the following codes, specifications and standards, except where more stringent requirements are shown or specified:

1. State of Connecticut Department of Transportation "Form 817," "Standard Specification for Roads, Bridges, Facilities and Incidental Construction”
2. ACI 301, "Specifications for Structural Concrete for Buildings."
3. ACI 318, "Building Code Requirements for Reinforced Concrete."
4. CRSI, "Manual of Standard Practice."
5. ACI 315, “Details and Detailing of Concrete Reinforcement"
6. ACI 347, “Recommended Practice for Concrete Formwork"
7. ACI 304R, "Recommended Practice for Measuring, Mixing, Transportation and Placing Concrete"
8. ACI 302.1R, "Guide for Concrete Floor and Slab Construction"
9. ACI 305R, "Hot Weather Concreting"
10. ACI 306R, "Cold Weather Concreting"
11. ACI 306.1, “Standard Specifications for Cold Weather Concreting"
12. ACI 308, "Standard Practice for Curing Concrete"
13. 309R "Standard Practice for Consolidating of Concrete"
14. ACI 211.1, “Standard Practice for Selecting Proportions for Normal, Heavy Weight and Mass Concrete”
15. ACI 303.1 “Standard Specifications for Cast-In-Place Architectural Concrete”
16. ASTM C309 “Standard Specifications for Liquid Membrane-Forming Compounds for Curing Concrete”
17. ASTM C494 “Standard Specifications for Chemical Admixtures for Concrete”

B. Testing Agency Qualifications: An independent agency, acceptable to the Engineer to perform material evaluation tests and to design concrete mixes, qualified according to ASTM C 1077 and ASTM E 329 for testing indicated, as documented according to ASTM E 548.

C. Materials and installed work may require testing and retesting at any time during progress of work. Tests, including retesting of rejected materials for installed work, shall be done at the Contractor’s expense.

D. Concrete Testing Service: Engage a qualified independent testing agency, acceptable to the Engineer, to perform material evaluation tests and to design concrete mixtures. The Engineer or his designated representative will perform material evaluation tests on the concrete mixes designed by the Contractor.

E. Conduct a Pre-Installation Meeting at the Project Site in compliance with the requirements of Form 817 Article 1.20-1.05.24, subsection 2.

1. At least 35 calendar days prior to submitting design mixes, conduct a meeting to review detailed requirements for preparing concrete design mixes and to determine procedures for satisfactory concrete operations. Review requirements

for submittals, status of coordinating work, and availability of materials. Establish materials inspection, testing, and certifications. Require representatives of each entity directly concerned with cast-in-place concrete to attend the meeting.

F. Source Limitations: Obtain each type or class of cementitious material of the same brand from the same manufacturer's plant, obtain aggregate from one source, and obtain admixtures and color hardener through one source from a single manufacturer in accordance with Form 817 Article 1.20-1.06.01.

1.4 DELIVERY, STORAGE, AND HANDLING:

A. Refer to Form 817 Article 1.06.03 and Form 817 Article 1.20-1.06.03 for additional information.

B. Steel Reinforcement: Deliver, store, and handle steel reinforcement to prevent bending and damage. Avoid damaging coatings on steel reinforcement. Repair damaged epoxy coatings on steel reinforcement according to ASTM D 3963.

C. Water-stops: Store water-stops under cover to protect from moisture, sunlight, dirt, oil, and other contaminants.

PART 2 - PRODUCTS

2.1 FORM-FACING MATERIALS:

A. Forms for Exposed Finish Concrete: Plywood, metal, metal-framed plywood faced, or other acceptable panel type material that will provide continuous, true, and smooth, exposed concrete surfaces. Furnish in largest practicable sizes to minimize number of joints and to conform to joint system shown on the plans.

1. Use overlaid plywood complying with DOC PS-1 "A-C or B-B High Density Overlaid Concrete Form," Class I or better.
2. Use plywood complying with DOC PS-1 "B-B (Concrete Form) Plywood," Class I, Exterior Grade or better, mill-oiled and edge-sealed, with each piece bearing legible inspection trademark.

B. Forms for Unexposed Finished Concrete: Plywood, lumber, metal, or another approved material. Provide lumber dressed on at least two edges and one side for tight fit.

C. Chamfer Strips: Wood, metal, PVC, or rubber strips, 3/4 by 3/4 inch, minimum.

D. Form-Release Agent: Commercially formulated form-release agent that will not bond with, stain, or adversely affect concrete surfaces and will not impair subsequent

treatments of concrete surfaces. Comply with local regulations controlling use of volatile organic compounds (VOC's).

2.2 STEEL REINFORCEMENT:

A. Reinforcing Bars: ASTM A 615, Grade 60, deformed.

B. Epoxy-Coated Reinforcing Bars: ASTM A 775, with less than 2 percent damaged coating in each 12-inch bar length.

C. Plain-Steel Welded Wire Reinforcement: ASTM A 185, plain, fabricated from as-drawn steel wire into flat sheets.

2.3 REINFORCEMENT ACCESSORIES:

A. Joint Dowel Bars: ASTM A 615, Grade 60, plain-steel bars, cut bars true to length with ends square and free of burrs.

B. Epoxy Repair Coating: Liquid, two-part, epoxy repair coating; compatible with epoxy coating on reinforcement and complying with ASTM A 775.

C. Bar Supports: Bolsters, chairs, spacers, and other devices for spacing, supporting, and fastening reinforcing bars and welded wire reinforcement in place. Manufacture bar supports from steel wire, plastic, or pre-cast concrete according to CRSI's "Manual of Standard Practice," of greater compressive strength than concrete and as follows:

1. For concrete surfaces exposed to view where legs of wire bar supports contact forms, use CRSI Class 1 plastic-protected steel wire or CRSI Class 2 stainless-steel bar supports.

2.4 CONCRETE MATERIALS:

A. Cementitious Material: Use the following cementitious materials, of the same type, brand, and source, throughout Project:

1. Portland Cement: ASTM C 150, Type 1 or II, gray. Do not use air entraining cement.
2. Fly Ash: ASTM C618, Type C or F.

B. Normal-Weight Aggregates: ASTM C 33, Class 3S. Provide aggregates from a single source for exposed concrete.

1. For exposed exterior surfaces, do not use fine or coarse aggregates that contain substances that cause spalling.

2. Provide evidence that all aggregates are non-reactive with alkaline when tested in accordance with ASTM C 289 and C 227.
3. Local aggregates not complying with ASTM C 33 but have shown to produce concrete of adequate strength and durability by special tests or actual service may be used when acceptable to the Engineer.

C. Water: ASTM C 94, clean and potable.

2.5 ADMIXTURES:

A. Air-Entraining Admixture: ASTM C 260.

B. Chemical Admixtures: Provide admixtures certified by manufacturer to be compatible with other admixtures and that will not contribute water-soluble chloride ions exceeding those permitted in hardened concrete. Do not use calcium chloride or admixtures containing calcium chloride.

1. Water-Reducing Admixture: ASTM C 494, Type A.
2. Water-Reducing and Retarding Admixture: ASTM C 494, Type D.
3. High-Range, Water-Reducing Admixture: ASTM C 494, Type F.

C. Corrosion-Inhibiting Admixture: Commercially formulated, non-set-accelerating, anodic inhibitor or mixed cathodic and anodic inhibitor; capable of forming a protective barrier and minimizing chloride reactions with steel reinforcement in concrete.

2.6 WATERSTOPS:

A. Flexible PVC Water-stops: CE CRD-C 572, for embedding in concrete to prevent passage of fluids through joints. Factory-fabricate corners, intersections, and directional changes. Size to suit joints.

1. Profile: Flat, dumbbell with center bulb.

2.7 CURING MATERIALS:

A. Evaporation Retarder: Waterborne, monomolecular film forming, manufactured for application to fresh concrete.

B. Absorptive Cover: AASHTO M 182, Class 2, burlap cloth made from jute or kenaf, weighing approximately 9 oz./sq. yd. when dry. No curing membranes can be used on slabs-on grade and slab above the basement.

C. Moisture-Retaining Cover: ASTM C 171, polyethylene film or white burlap-polyethylene sheet.

D. Water: Clean and potable.

E. Clear, Waterborne, Membrane-Forming Curing Compound: ASTM C 309, Type 1, Class B, dissipating.

F. Clear, Waterborne, Membrane-Forming Curing Compound: ASTM C 309, Type 1, Class B, nondissipating**,** certified by curing compound manufacturer to not interfere with bonding of floor covering.

2.8 RELATED MATERIALS:

A. Expansion and Isolation-Joint-Filler Strips: ASTM D 1751, asphalt-saturated cellulosic fiber or ASTM D 1752, cork or self-expanding cork.

B. Semi-rigid Joint Filler: Two-component, semi-rigid, 100 percent solids, epoxy resin with a Type A Shore Durometer hardness of 80 per ASTM D 2240.

C. Bonding Agent: ASTM C 1059, Type II, non-redispersible, acrylic emulsion or styrene butadiene.

A. Epoxy Bonding Adhesive: ASTM C 881, two-component epoxy resin, capable of humid curing and bonding to damp surfaces, of class suitable for application temperature and of grade to suit requirements, and as follows:

1. Types I and II, non-load bearing, for bonding hardened or freshly mixed concrete to hardened concrete.

B. Granular Fill: Refer to Form 817, Section 2.13 “Granular Fill” for material and construction methods required.

2.9 REPAIR MATERIALS:

A. Repair Underlayment: Cement-based, polymer-modified, self-leveling product that can be applied in thicknesses from 1/8 inch and that can be feathered at edges to match adjacent floor elevations.

1. Cement Binder: ASTM C 150, Portland cement or hydraulic or blended hydraulic cement as defined in ASTM C 219.
2. Primer: Product of underlayment manufacturer recommended for substrate conditions and application.
3. Aggregate: Well-graded, washed gravel, 1/8 to 1/4 inch or coarse sand as recommended by underlayment manufacturer.
4. Compressive Strength: Not less than 4000 psi at 28 days when tested according to ASTM C 109/C 109M.

B. Repair Over-layment: Cement-based, polymer-modified, self-leveling product that can be applied in thicknesses from 1/8 inch and that can be feathered at edges to match adjacent floor elevations.

1. Cement Binder: ASTM C 150, Portland cement or hydraulic or blended hydraulic cement as defined in ASTM C 219.
2. Primer: Product of topping manufacturer recommended for substrate, conditions, and application.
3. Aggregate: Well-graded, washed gravel, 1/8 to 1/4 inch or coarse sand as recommended by topping manufacturer.
4. Compressive Strength: Not less than 4000 psi at 28 days when tested according to ASTM C 109/C 109M.

C. Penetrating Sealer: slabs-on-grade shall receive a coating of penetrating sealer applied in accordance with manufacturer's written instructions. Provide certification by manufacturer that product complies with local regulations controlling the use of volatile organic compounds (VOC). Available Products include, but are not limited to the following:

1. Hydrozo Silane 40M and Hydrozo Enviroseal 40 by Hydrozo.
2. Chem-Trete BSM 40 by Huls-America.
3. Masterseal SL40 by Master Builders.
4. Penetrating Sealer 40 - by Sonneborn Building Products.

2.10 CONCRETE MIXTURES, GENERAL:

A. Prepare design mixtures for each type and strength of concrete, proportioned on the basis of laboratory trial mixture or field test data, or both, according to ACI 301.

1. Use a qualified independent testing agency for preparing and reporting proposed mixture designs based on laboratory trial mixtures.

B. Cementitious Materials: Limit percentage, by weight, of cementitious materials other than Portland cement in concrete as follows:

1. Fly Ash: 15 percent. Not allowed in cement mixes for slab-on-grade.

C. Limit water-soluble, chloride-ion content in hardened concrete to 0.15 percent by weight of cement.

D. Admixtures: Use admixtures according to manufacturer's written instructions and only when approved by the Engineer.

1. Use water-reducing high-range water-reducing or plasticizing admixture in concrete, as required, for placement and workability.
2. Use water-reducing and retarding admixture when required by high temperatures, low humidity, or other adverse placement conditions.
3. Use water-reducing admixture in pumped concrete, except footings, concrete for heavy-use industrial slabs and parking structure slabs, concrete required to be watertight, and concrete with a water-cementitious materials ratio below 0.50.

4. Use non-chlorine accelerating admixture in concrete slabs placed at ambient temperatures below 50 deg F.
5. Corrosion-inhibiting admixture for salt shed stems and piers shall contain calcium nitrite at 4 gal. per cubic yard of a 30 percent solid solution.
6. No admixtures containing calcium chloride shall be permitted in slabs-on-grade and other concrete floors.

2.11 CONCRETE MIXTURES FOR BUILDING ELEMENTS:

A. Slabs-on-Grade: Proportion normal-weight concrete mixture as follows:

1. Minimum Compressive Strength: 4000 psi at 28 days.
2. Minimum Cementitious Materials Content: 540 lb/cu. yd.
3. Slump Limit: 3 inches , plus or minus 1 inch
4. Air Content: 6 percent, plus or minus 1.5 percent at point of delivery for 1-inch nominal maximum aggregate size.
5. Air Content: Do not allow air content of troweled finished floors to exceed 3 percent.

2.12 FABRICATING REINFORCEMENT:

A. Fabricate steel reinforcement according to CRSI's "Manual of Standard Practice."

2.13 CONCRETE MIXING:

A. Ready-Mixed Concrete: Measure, batch, mix, and deliver concrete according to ASTM C 94, and furnish batch ticket information.

1. When air temperature is between 85 and 90 deg F, reduce mixing and delivery time from 1-1/2 hours to 75 minutes; when air temperature is above 90 deg F, reduce mixing and delivery time to 60 minutes.
2. Project-Site Mixing: Measure, batch, and mix concrete materials and concrete according to ASTM C 94. Mix concrete materials in appropriate drum-type batch machine mixer.
3. For mixer capacity of 1 cu. yd or smaller, continue mixing at least 1-1/2 minutes, but not more than 5 minutes after ingredients are in mixer, before any part of batch is released. For mixer capacity larger than 1 cu. yd, increase mixing time by 15 seconds for each additional 1 cu. yd.
4. Provide batch ticket for each batch discharged and used in the Work, indicating Project identification name and number, date, mixture type, mixture time, quantity, and amount of water added. Record approximate location of final deposit in structure.

PART 3 - EXECUTION

3.1 FORMWORK:

A. Construct formwork so concrete members and structures are of size, shape, alignment, elevation, and position indicated, within tolerance limits of ACI 117.

B. Limit concrete surface irregularities, designated by ACI 347R as abrupt or gradual, as follows:

1. Class A, 1/8 inch for concrete surfaces exposed to view.
2. Class B, 1/4 inch for other concrete surfaces.

D. Construct forms tight enough to prevent loss of concrete mortar.

E. Fabricate forms for easy removal without hammering or prying against concrete surfaces. Provide crush or wrecking plates where stripping may damage cast concrete surfaces

1. Install keyways, reglets, recesses, and the like, for easy removal.
2. Do not use rust-stained steel form-facing material.

F. Set edge forms, bulkheads, and intermediate screed strips for slabs to achieve required elevations and slopes in finished concrete surfaces. Provide and secure units to support screed strips; use strike-off templates or compacting-type screeds.

G. Chamfer exterior corners and edges of permanently exposed concrete.

I. Form openings, chases, offsets, sinkages, keyways, blocking, screeds, and bulkheads required in the Work. Determine sizes and locations from trades providing such items.

J. Clean forms and adjacent surfaces to receive concrete. Remove chips, wood, sawdust, dirt, and other debris just before placing concrete.

K. Retighten forms and bracing before placing concrete, as required, to prevent mortar leaks and maintain proper alignment.

L. Coat contact surfaces of forms with form-release agent, according to manufacturer's written instructions, before placing reinforcement.

3.2 STEEL REINFORCEMENT:

A. General: Comply with CRSI's "Manual of Standard Practice" for placing reinforcement.

B. Clean reinforcement of loose rust and mill scale, earth, ice, and other foreign materials that would reduce bond to concrete.

C. Install welded wire reinforcement in longest practicable lengths on bar supports spaced to minimize sagging. Lap edges and ends of adjoining sheets at least one mesh spacing. Offset laps of adjoining sheet widths to prevent continuous laps in either direction. Lace overlaps with wire.

D. Epoxy-Coated Reinforcement: Repair cut and damaged epoxy coatings with epoxy repair coating according to ASTM D 3963/D 3963M. Use epoxy-coated steel wire ties to fasten epoxy-coated steel reinforcement.

1. Use Epoxy-Coated Reinforcing Bars for all concrete exposed to salt such as Slabs-on-Grade and Fuel Island.

3.3 JOINTS:

E. General: Construct joints true to line with faces perpendicular to surface plane of concrete.

F. Construction Joints: Install so strength and appearance of concrete are not impaired, at locations indicated or as approved by the Engineer.

1. Place joints perpendicular to main reinforcement. Continue reinforcement across construction joints, unless otherwise indicated. Do not continue reinforcement through sides of strip placements of floors and slabs.

G. Contraction Joints in Slabs-on-Grade: Form weakened-plane contraction joints, sectioning concrete into areas as indicated. Construct contraction joints for a depth equal to at least one-fourth of concrete thickness as follows:

1. Grooved Joints: Form contraction joints after initial floating by grooving and finishing each edge of joint to a radius of 1/8 inch. Repeat grooving of contraction joints after applying surface finishes. Eliminate groover tool marks on concrete surfaces.
2. Sawed Joints: Form contraction joints with power saws equipped with shatterproof abrasive or diamond-rimmed blades. Cut 1/8-inch-wide joints into concrete when cutting action will not tear, abrade, or otherwise damage surface and before concrete develops random contraction cracks.

3.4 WATERSTOPS:

A. Flexible Water-stops: Install in construction joints and at other joints indicated to form a continuous diaphragm. Install in longest lengths practicable. Support and protect exposed water-stops during progress of the Work. Field-fabricate joints in water-stops according to manufacturer's written instructions.

3.5 CONCRETE PLACEMENT:

A. Before placing concrete, verify that installation of formwork, reinforcement, and embedded items is complete and that required inspections have been performed.

B. Do not add water to concrete during delivery, at Project Site, or during placement unless approved by the Engineer.

C. Before test sampling and placing concrete, water may be added at Project Site, subject to limitations of ACI 301.

1. Do not add water to concrete after adding high-range water-reducing admixtures to mixture.

D. Deposit concrete continuously in one layer or in horizontal layers of such thickness that no new concrete will be placed on concrete that has hardened enough to cause seams or planes of weakness. If a section cannot be placed continuously, provide construction joints as indicated. Deposit concrete to avoid segregation.

1. Deposit concrete in horizontal layers of depth to not exceed formwork design pressures and in a manner to avoid inclined construction joints.
2. Consolidate placed concrete with mechanical vibrating equipment according to ACI 301.
3. Do not use vibrators to transport concrete inside forms. Insert and withdraw vibrators vertically at uniformly spaced locations to rapidly penetrate placed layer and at least 6 inches into preceding layer. Do not insert vibrators into lower layers of concrete that have begun to lose plasticity. At each insertion, limit duration of vibration to time necessary to consolidate concrete and complete embedment of reinforcement and other embedded items without causing mixture constituents to segregate.

E. Deposit and consolidate concrete for floors and slabs in a continuous operation, within limits of construction joints, until placement of a panel or section is complete.

1. Consolidate concrete during placement operations so concrete is thoroughly worked around reinforcement and other embedded items and into corners.
2. Maintain reinforcement in position on chairs during concrete placement.
3. Screed slab surfaces with a straightedge and strike off to correct elevations.
4. Slope surfaces uniformly to drains where required.
5. Begin initial floating using bull floats or darbies to form a uniform and open-textured surface plane, before excess bleed-water appears on the surface. Do not further disturb slab surfaces before starting finishing operations.

B. Cold-Weather Placement: Comply with ACI 306.1 and as follows. Protect concrete work from physical damage or reduced strength that could be caused by frost, freezing actions, or low temperatures.

1. When average high and low temperature is expected to fall below 40 deg F for three successive days, maintain delivered concrete mixture temperature within the temperature range required by ACI 301.
2. Do not use frozen materials or materials containing ice or snow. Do not place concrete on frozen sub-grade or on sub-grade containing frozen materials.
3. Do not use calcium chloride, salt, or other materials containing antifreeze agents or chemical accelerators unless otherwise specified and approved in mixture designs.

C. Hot-Weather Placement: Comply with ACI 301 and as follows:

1. Maintain concrete temperature below 90 deg F at time of placement. Chilled mixing water or chopped ice may be used to control temperature, provided water equivalent of ice is calculated to total amount of mixing water. Using liquid nitrogen to cool concrete is Contractor's option.
2. Fog-spray forms, steel reinforcement, and sub-grade just before placing concrete. Keep sub-grade uniformly moist without standing water, soft spots, or dry areas.

3.6 FINISHING SLABS:

A. General: Comply with ACI 302.1R recommendations for screeding, re-straightening, and finishing operations for concrete surfaces. Do not wet concrete surfaces.

1. Edge and Float the Slab, when all traces of the water are gone and the concrete starts to harden. Start by running the edger around the perimeter to round and compact the corner. After finishing edging start slab Float and Trowel the Surface to Smooth and Compact; Floating removes the marks left by edging and brings the surface one-step closer to a final finish.

B. Broom Finish: Apply a broom finish to exterior concrete platforms, steps, and ramps, and elsewhere as indicated.

1. Immediately after float finishing, slightly roughen trafficked surface by brooming with fiber-bristle broom perpendicular to main traffic route. The slab shall be uniform in appearance. The broom finish shall not dislodge aggregate nor leave large particles of cement paste which not conform to the broom finish. Coordinate required final finish with Engineer before application.

3.7 MISCELLANEOUS CONCRETE ITEMS:

A. Filling In: Fill in holes and openings left in concrete structures, unless otherwise indicated, after work of other trades is in place. Mix, place, and cure concrete, as specified, to blend with in-place construction. Provide other miscellaneous concrete filling indicated or required to complete the Work.

3.8 CONCRETE PROTECTING AND CURING:

A. General: Protect freshly placed concrete from premature drying and excessive cold or hot temperatures. Comply with ACI 306.1 for cold-weather protection and ACI 301 for hot-weather protection during curing. Do not use curing membranes on slabs-on-grade and concrete floors generally in areas of etched floors.

B. Evaporation Retarder: Apply evaporation retarder to unformed concrete surfaces if hot, dry, or windy conditions cause moisture loss approaching 0.2 lb/sq. ft. x h before and during finishing operations. Apply according to manufacturer's written instructions after placing, screeding, and bull floating or darbying concrete, but before float finishing.

C. Formed Surfaces: Cure formed concrete surfaces, including underside of beams, supported slabs, and other similar surfaces. If forms remain during curing period, moist cure after loosening forms. If removing forms before end of curing period, continue curing for the remainder of the curing period.

D. Cure concrete according to ACI 308.1, by one or a combination of the following methods:

1. Moisture Curing: Keep surfaces continuously moist for not less than seven days with the following materials:

   a. Water.
   b. Continuous water-fog spray.
   c. Absorptive cover, water saturated, and kept continuously wet. Cover concrete surfaces and edges with 12-inch lap over adjacent absorptive covers.

2. Moisture-Retaining-Cover Curing: Cover concrete surfaces with moisture-retaining cover for curing concrete, placed in widest practicable width, with sides and ends lapped at least 12 inches and sealed by waterproof tape or adhesive. Cure for not less than seven days. Immediately repair any holes or tears during curing period using cover material and waterproof tape.

   a. Moisture cure or use moisture-retaining covers to cure concrete surfaces to receive floor coverings.
   b. Moisture cure or use moisture-retaining covers to cure concrete surfaces to receive penetrating liquid floor treatments.
   c. Cure concrete surfaces to receive floor coverings with either a moisture-retaining cover or a curing compound that the manufacturer certifies will not interfere with bonding of floor covering used on Project.

3. Curing Compound: Apply uniformly in continuous operation by power spray or roller according to manufacturer's written instructions. Recoat areas subjected to heavy rainfall within three hours after initial application. Maintain continuity of coating and repair damage during curing period.

a. After curing period has elapsed, remove curing compound without damaging concrete surfaces by method recommended by curing compound manufacturer unless manufacturer certifies curing compound will not interfere with bonding of floor covering used on Project.

4. Curing and Sealing Compound: Apply uniformly to floors and slabs indicated in a continuous operation by power spray or roller according to manufacturer's written instructions. Recoat areas subjected to heavy rainfall within three hours after initial application. Repeat process 24 hours later and apply a second coat. Maintain continuity of coating and repair damage during curing period.

3.9 FIELD QUALITY CONTROL:

A. Testing and Inspecting: The State will engage a qualified testing and inspecting agency to perform field tests and inspections and prepare test reports.

B. Inspections:

1. Steel reinforcement placement.
2. Verification of use of required design mixture.
3. Concrete placement, including conveying and depositing.
4. Curing procedures and maintenance of curing temperature.
5. Verification of concrete strength before removal of shores and forms.

C. Concrete Tests: Testing of composite samples of fresh concrete obtained according to ASTM C 172 shall be performed according to the following requirements:

1. Testing Frequency: Obtain one composite sample for each day's pour of each concrete mixture exceeding 5 cu. yd., but less than 25 cu. yd. , plus one set for each additional 50 cu. yd. or fraction thereof.

   a. When frequency of testing will provide fewer than five compressive-strength tests for each concrete mixture, testing shall be conducted from at least five randomly selected batches or from each batch if fewer than five are used.

2. Slump: ASTM C 143; one test at point of placement for each composite sample, but not less than one test for each day's pour of each concrete mixture. Perform additional tests when concrete consistency appears to change.
3. Air Content: ASTM C 231, pressure method, for normal-weight concrete; one test for each composite sample, but not less than one test for each day's pour of each concrete mixture.
4. Concrete Temperature: ASTM C 1064; one test hourly when air temperature is 40 deg F and below and when 80 deg F and above, and one test for each composite sample.
5. Compression Test Specimens: ASTM C 31.

a. Cast and laboratory cure two sets of two standard cylinder specimens for each composite sample.

6. Compressive-Strength Tests: ASTM C 39; test one set of two laboratory-cured specimens at 7 days and one set of two specimens at 28 days.

   a. Test one set of two field-cured specimens at 7 days and one set of two specimens at 28 days.
   b. A compressive-strength test shall be the average compressive strength from a set of two specimens obtained from same composite sample and tested at age indicated.

7. When strength of field-cured cylinders is less than 85 percent of companion laboratory-cured cylinders, Contractor shall evaluate operations and provide corrective procedures for protecting and curing in-place concrete.
8. Strength of each concrete mixture will be satisfactory if every average of any three consecutive compressive-strength tests equals or exceeds specified compressive strength and no compressive-strength test value falls below specified compressive strength by more than 500 psi .
9. Test results shall be reported in writing to the Engineer, concrete manufacturer, and Contractor within 48 hours of testing. Reports of compressive strength tests shall contain Project identification name and number, date of concrete placement, name of concrete testing and inspecting agency, location of concrete batch in Work, design compressive strength at 28 days, concrete mixture proportions and materials, compressive breaking strength, and type of break for both 7- and 28-day tests.
10. Nondestructive Testing: Impact hammer, sonoscope, or other nondestructive device may be permitted by Engineer but will not be used as sole basis for approval or rejection of concrete.
11. Additional Tests: Testing and inspecting agency shall make additional tests of concrete when test results indicate that slump, air entrainment, compressive strengths, or other requirements have not been met, as directed by Engineer. Testing and inspecting agency may conduct tests to determine adequacy of concrete by cored cylinders complying with ASTM C 42 or by other methods as directed by Engineer.
12. Additional testing and inspecting, at Contractor's expense, will be performed to determine compliance of replaced or additional work with specified requirements.
13. Correct deficiencies in the Work that test reports and inspections indicate does not comply with the Contract.

D. Measure floor and slab flatness and levelness according to ASTM E 1155 within 48 hours of finishing.

END OF SECTION 033000

SECTION 079200 - JOINT SEALANTS

PART 1 - GENERAL

1.1 SUMMARY

A. Section Includes:

1. Silicone joint sealants, general.

B. Related Sections:

1. Division 03 Section 033000, "Cast-in-Place Concrete" for concrete control and expansion joint fillers and joint sealing.

1.2 PERFORMANCE REQUIREMENTS:

A. Provide elastomeric joint sealants that establish and maintain watertight and airtight continuous joint seals without staining or deteriorating joint substrates.

1.3 SUBMITTALS:

A. Submit the following in accordance with Form 817 Article 1.20-1.05.02 and NOTICE TO CONTRACTOR – SUBMITTALS.

B. Product Data: For each joint-sealant product indicated.

C. Quality Assurance Submittals:

1. Manufacturer Certification Letter in accordance with NOTICE TO CONTRACTOR – POTENTIAL FOR ASBESTOS CONTAINING MATERIALS.

D. Joint-Sealant Schedule: Include the following information:

1. Joint-sealant application, joint location, and designation.
2. Joint-sealant manufacturer and product name.
3. Joint-sealant formulation.

E. Product Certificates: For each kind of joint sealant and accessory, from manufacturer.

F. Sealant, Waterproofing, and Restoration Institute (SWRI) Validation Certificate: For each sealant specified to be validated by SWRI's Sealant Validation Program.

1.4 QUALITY ASSURANCE:

A. Installer Qualifications: Manufacturer's authorized representative who is trained and approved for installation of units required for this Project.

B. Source Limitations: Obtain each kind of joint sealant from single source from single manufacturer.

1.5 PROJECT CONDITIONS:

A. Do not proceed with installation of joint sealants under the following conditions:

1. When ambient and substrate temperature conditions are outside limits permitted by joint-sealant manufacturer or are below 40 deg F (5 deg C).
2. When joint substrates are wet.
3. Where joint widths are less than those allowed by joint-sealant manufacturer for applications indicated.
4. Where contaminants capable of interfering with adhesion have not yet been removed from joint substrates.

PART 2 - PRODUCTS

2.1 MATERIALS, GENERAL:

A. Compatibility: Provide joint sealants, backings, and other related materials that are compatible with one another and with joint substrates under conditions of service and application, as demonstrated by joint-sealant manufacturer, based on testing and field experience.

B. VOC Content of Interior Sealants: Provide sealants and sealant primers for use inside the weatherproofing system that comply with the following limits for VOC content when calculated according to 40 CFR 59, Part 59, Subpart D (EPA Method 24):

1. Architectural Sealants: 250 g/L.
2. Sealant Primers for Nonporous Substrates: 250 g/L.
3. Sealant Primers for Porous Substrates: 775 g/L.

2.2 SILICONE JOINT SEALANTS:

A. Single-Component, Nonsag, Neutral-Curing Silicone Joint Sealant: ASTM C 920, Type S, Grade NS, Class 100/50, for Use NT.

1. Available Products: Subject to compliance with requirements, available products that may be incorporated into the Work include, but are not limited to, the following:

a. Dow Corning Corporation; 790.
b. GE Advanced Materials - Silicones; SilPruf LM SCS2700.
c. May National Associates, Inc.; Bondaflex Sil 290.
d. Pecora Corporation; 311 NS.
e. Sika Corporation, Construction Products Division; SikaSil-C990.
f. Tremco Incorporated; Spectrem 1.

B. Mildew-Resistant, Single-Component, Nonsag, Neutral-Curing Silicone Joint Sealant: ASTM C 920, Type S, Grade NS, Class 25, for Use NT.

1. Available Products: Subject to compliance with requirements, available products that may be incorporated into the Work include, but are not limited to, the following:

a. Pecora Corporation; 898.

2.3 JOINT SEALANT BACKING:

A. General: Provide sealant backings of material that are nonstaining; are compatible with joint substrates, sealants, primers, and other joint fillers; and are approved for applications indicated by sealant manufacturer based on field experience and laboratory testing.

B. Cylindrical Sealant Backings: ASTM C 1330, Type C (closed-cell material with a surface skin), Type O (open-cell material), Type B (bicellular material with a surface skin), or any of the preceding types, as approved in writing by joint-sealant manufacturer for joint application indicated, and of size and density to control sealant depth and otherwise contribute to producing optimum sealant performance.

C. Bond-Breaker Tape: Polyethylene tape or other plastic tape recommended by sealant manufacturer for preventing sealant from adhering to rigid, inflexible joint-filler materials or joint surfaces at back of joint. Provide self-adhesive tape where applicable.

2.4 MISCELLANEOUS MATERIALS:

A. Primer: Material recommended by joint-sealant manufacturer where required for adhesion of sealant to joint substrates indicated, as determined from preconstruction joint-sealant-substrate tests and field tests.

B. Cleaners for Nonporous Surfaces: Chemical cleaners acceptable to manufacturers of sealants and sealant backing materials, free of oily residues or other substances capable of staining or harming joint substrates and adjacent nonporous surfaces in any way, and formulated to promote optimum adhesion of sealants to joint substrates.

C. Masking Tape: Nonstaining, nonabsorbent material compatible with joint sealants and surfaces adjacent to joints.

PART 3 - EXECUTION

3.1 EXAMINATION:

A. Examine joints indicated to receive joint sealants, with Installer present, for compliance with requirements for joint configuration, installation tolerances, and other conditions affecting joint-sealant performance.

B. Proceed with installation only after unsatisfactory conditions have been corrected.

3.2 PREPARATION:

A. Surface Cleaning of Joints: Clean out joints immediately before installing joint sealants to comply with joint-sealant manufacturer's written instructions and the following requirements:

1. Remove all foreign material from joint substrates that could interfere with adhesion of joint sealant, including dust, paints (except for permanent, protective coatings tested and approved for sealant adhesion and compatibility by sealant manufacturer), old joint sealants, oil, grease, waterproofing, water repellents, water, surface dirt, and frost.
2. Clean porous joint substrate surfaces by brushing, grinding, mechanical abrading, or a combination of these methods to produce a clean, sound substrate capable of developing optimum bond with joint sealants. Remove loose particles remaining after cleaning operations above by vacuuming or blowing out joints with oil-free compressed air. Porous joint substrates include the following:

   a. Concrete.

3. Remove laitance and form-release agents from concrete.

B. Joint Priming: Prime joint substrates where recommended by joint-sealant manufacturer or as indicated by preconstruction joint-sealant-substrate tests or prior experience. Apply primer to comply with joint-sealant manufacturer's written instructions. Confine primers to areas of joint-sealant bond; do not allow spillage or migration onto adjoining surfaces.

C. Masking Tape: Use masking tape where required to prevent contact of sealant or primer with adjoining surfaces that otherwise would be permanently stained or damaged by such contact or by cleaning methods required to remove sealant smears. Remove tape immediately after tooling without disturbing joint seal.

3.3 INSTALLATION OF JOINT SEALANTS:

A. General: Comply with joint-sealant manufacturer's written installation instructions for products and applications indicated, unless more stringent requirements apply.

B. Sealant Installation Standard: Comply with recommendations in ASTM C 1193 for use of joint sealants as applicable to materials, applications, and conditions indicated.

C. Install sealant backings of kind indicated to support sealants during application and at position required to produce cross-sectional shapes and depths of installed sealants relative to joint widths that allow optimum sealant movement capability.

1. Do not leave gaps between ends of sealant backings.
2. Do not stretch, twist, puncture, or tear sealant backings.
3. Remove absorbent sealant backings that have become wet before sealant application and replace them with dry materials.

D. Install bond-breaker tape behind sealants where sealant backings are not used between sealants and backs of joints.

E. Install sealants using proven techniques that comply with the following and at the same time backings are installed:

1. Place sealants so they directly contact and fully wet joint substrates.
2. Completely fill recesses in each joint configuration.
3. Produce uniform, cross-sectional shapes and depths relative to joint widths that allow optimum sealant movement capability.

F. Tooling of Nonsag Sealants: Immediately after sealant application and before skinning or curing begins, tool sealants according to requirements specified in subparagraphs below to form smooth, uniform beads of configuration indicated; to eliminate air pockets; and to ensure contact and adhesion of sealant with sides of joint.

1. Remove excess sealant from surfaces adjacent to joints.
2. Use tooling agents that are approved in writing by sealant manufacturer and that do not discolor sealants or adjacent surfaces.
3. Provide concave joint profile per Figure 8A in ASTM C 1193, unless otherwise indicated.
4. Provide flush joint profile where indicated per Figure 8B in ASTM C 1193.
5. Provide recessed joint configuration of recess depth and at locations indicated per Figure 8C in ASTM C 1193.

    a. Use masking tape to protect surfaces adjacent to recessed tooled joints.

G. Installation of Preformed Silicone-Sealant System: Comply with the following requirements:

1. Apply masking tape to each side of joint, outside of area to be covered by sealant system.
2. Apply silicone sealant to each side of joint to produce a bead of size complying with preformed silicone-sealant system manufacturer's written instructions and covering a bonding area of not less than 3/8 inch (10 mm). Hold edge of sealant bead 1/4 inch (6 mm) inside masking tape.
3. Within 10 minutes of sealant application, press silicone extrusion into sealant to wet extrusion and substrate. Use a roller to apply consistent pressure and ensure uniform contact between sealant and both extrusion and substrate.
4. Complete installation of sealant system in horizontal joints before installing in vertical joints. Lap vertical joints over horizontal joints. At ends of joints, cut silicone extrusion with a razor knife.

H. Installation of Preformed Foam Sealants: Install each length of sealant immediately after removing protective wrapping. Do not pull or stretch material. Produce seal continuity at ends, turns, and intersections of joints. For applications at low ambient temperatures, apply heat to sealant in compliance with sealant manufacturer's written instructions.

3.4 FIELD QUALITY CONTROL:

A. Field-Adhesion Testing: Field test joint-sealant adhesion to joint substrates as follows:

1. Extent of Testing: Test completed and cured sealant joints as follows:

   a. Perform 1 test for each 1000 feet (30 m) of joint length thereafter or 1 test per each floor per elevation.

2. Test Method: Test joint sealants according to Method A, Field-Applied Sealant Joint Hand Pull Tab, in Appendix X1 in ASTM C 1193 or Method A, Tail Procedure, in ASTM C 1521.

   a. For joints with dissimilar substrates, verify adhesion to each substrate separately; extend cut along one side, verifying adhesion to opposite side. Repeat procedure for opposite side.

3. Inspect tested joints and report on the following:

   a. Whether sealants filled joint cavities and are free of voids.
   b. Whether sealant dimensions and configurations comply with specified requirements.
   c. Whether sealants in joints connected to pulled-out portion failed to adhere to joint substrates or tore cohesively. Include data on pull distance used to test each kind of product and joint substrate. Compare these results to determine if adhesion passes sealant manufacturer's field-adhesion hand-pull test criteria.

4. Record test results in a field-adhesion-test log. Include dates when sealants were installed, names of persons who installed sealants, test dates, test locations, whether joints were primed, adhesion results and percent elongations, sealant fill, sealant configuration, and sealant dimensions.
5. Repair sealants pulled from test area by applying new sealants following same procedures used originally to seal joints. Ensure that original sealant surfaces are clean and that new sealant contacts original sealant.

B. Evaluation of Field-Adhesion Test Results: Sealants not evidencing adhesive failure from testing or noncompliance with other indicated requirements will be considered satisfactory. Remove sealants that fail to adhere to joint substrates during testing or to comply with other requirements. Retest failed applications until test results prove sealants comply with indicated requirements.

3.5 CLEANING:

A. Clean off excess sealant or sealant smears adjacent to joints as the Work progresses by methods and with cleaning materials approved in writing by manufacturers of joint sealants and of products in which joints occur.

3.6 PROTECTION:

A. Protect joint sealants during and after curing period from contact with contaminating substances and from damage resulting from construction operations or other causes so sealants are without deterioration or damage at time of the issuance of the Certificate of Compliance. If, despite such protection, damage or deterioration occurs, cut out and remove damaged or deteriorated joint sealants immediately so installations with repaired areas are indistinguishable from original work.

END OF SECTION 079200

SECTION 132160 – INSTALLATION OF NEW FUEL FACILITY

PART 1 - GENERAL

1.1 SUMMARY:

A. The Contractor shall install the complete fuel facility, except as otherwise noted, in conformity with the lines, grades, dimensions and details shown on the plans and as described herein.

B. Each component of the fuel facility shall be compatible with the dispensing of E85 Ethanol. Where model numbers are used herein, but are not compatible with E85 Ethanol, the appropriate E85 Ethanol compatible component shall be supplied at no additional cost to the Engineer.

C. The tank nipple arrangement described herein and shown on the plans is based upon the aboveground storage tank identified herein. “Or Equal” submissions will address the need for an alternative tank nipple arrangement, if necessary, that is acceptable to the Designer. Alternative tank nipple arrangements will also be at no additional cost to the Engineer.

D. Related CSI Sections include the following:

1. Division 13 Section 132180, "Tank Monitoring System" for aboveground and underground storage tank monitoring system.

1.2 DEFINITIONS:

A. AST: Aboveground storage tank.

1.3 ACTION SUBMITTALS:

A. Submit the following in accordance with Form 817 Article 1.20-1.05.02 and NOTICE TO CONTRACTOR – SUBMITTALS.

B. Product Data: For each type of product indicated. Include construction details, material descriptions, and dimensions of individual components and profiles. Also include, where applicable, rated capacities, operating characteristics, electrical characteristics, and furnished specialties and accessories.

1. Spare Parts: Include name, address, and telephone number of in-state supplier of spare parts. No out-of-state suppliers shall be permitted.

C. Shop Drawings: For storage tanks and pumps, include details of supports and anchors. Indicate all critical dimensions, locations of all nipples, and accessories, etc.

1.4 INFORMATIONAL SUBMITTALS:

A. Quality Assurance Submittals:

1. Certification that tank test equipment conforms to State and Federal requirements and that the persons performing the tests are qualified on said test equipment.
2. Field quality control test reports.

1.5 CLOSEOUT SUBMITTALS:

A. Operation and Maintenance Data: For fuel facility equipment and accessories to include in the operation and maintenance manuals specified in Form 817 Article 1.20-1.08.14 subsection 2 and described in NOTICE TO CONTRACTOR – CLOSEOUT DOCUMENTS. Include the following:

1. Interconnection as-built wiring diagrams with identified system components and devices for the entire fuel control center and fuel island.

B. Warranty: Special warranties specified in Part 1.9, “WARRANTY.”

1.6 QUALITY ASSURANCE:

A. Electrical Installer Qualifications: An experienced electrician capable of wiring, installing, and troubleshooting all related portions of a fuel facility as specified in this Section.

B. Conduct a Pre-Installation Meeting at the Project Site in compliance with the requirements of Form 817 Article 1.20-1.05.24 subsection 2.

1. Meet with Engineer’s representatives before any conduit or conductors are installed to develop a mutual understanding of the details and interconnections of the Fuel Management System, Tank Monitoring System, fuel dispensers, and submersible pumps. Ensure the participation of the Contractor, Electrical Installer, Fuel Management System manufacturers’ authorized service representative, Tank Monitoring System manufacturers’ authorized service representative, submersible pump manufacturers’ authorized service representative, and other support personnel. Provide seven calendar days' advance notice of scheduled meeting time and location.

1.7 DELIVERY, STORAGE, AND HANDLING:

A. Lift tanks in accordance with manufacturer's instructions and with the proper equipment. Do not use chain or cables around tanks at any time. If tanks have to be moved, set on smooth ground free of rocks and foreign objects. Do not drop or roll tanks. Do not allow tanks to be impacted.

B. Other Tank Materials: Store material in a clean dry area protected from damage. Materials may be stored outside only with the written approval of the Engineer.

1.8 COORDINATION:

A. A charge of $32,400.00 shall be included in the contract bid price for the filling of the gasoline and diesel ASTs to 90% of the rated capacity with Automotive Unleaded Gasoline and Ultra Low Sulfur Vehicular Diesel, or as otherwise directed by the Engineer. All Contractors will include the above amount for gasoline and diesel AST filling in the Contract Bid Price.

B. All bidders will include the above amount in Item No. 1600002A – Fuel Adjustment Cost along with costs for other fuels.

1.9 WARRANTY:

A. Refer to Form 817 Article 1.20-1.06.08 and NOTICE TO CONTRACTOR – CLOSEOUT DOCUMENTS for additional information.

B. Special Warranty: Manufacturer's standard form in which manufacturer agrees to repair or replace storage tanks that fail in materials or workmanship within specified warranty period.

1. Storage Tanks:

a. Failures include, but are not limited to, the following when used for storage of motor fuel at temperatures not exceeding 150 deg F:

1) Structural failures including cracking, breakup, and collapse.
2) Corrosion failure including external and internal corrosion of tanks.

b. Warranty Period: 30 years from the issuance of the Certificate of Compliance.

PART 2 - PRODUCTS

2.1 PIPES, TUBES, AND FITTINGS:

A. Black Steel Pipe: Schedule 40, conforming to ASTM A53 with malleable iron fittings conforming to ANSI B16.3.

B. Galvanized Steel Pipe: Schedule 40, conforming to ASTM A53 with zinc-coated malleable iron fittings conforming to ANSI B16.3.

2.2 JOINING MATERIALS:

A. Per manufacturer recommendations unless otherwise noted.

2.3 MANUAL SHUTOFF VALVES:

A. General Requirements for Metallic Valves, NPS 2 and Smaller for Liquid Service: Comply with UL 842.

1. CWP Rating: 125 psig.
2. Threaded Ends: Comply with ASME B1.20.1.
3. Dryseal Threads on Flare Ends: Comply with ASME B1.20.3.
4. Tamperproof Feature: Locking feature for valves indicated in the valve schedule.
5. Service Mark: Initials "WOG" shall be permanently marked on valve body.

B. Two-Piece, Full-Port, Bronze Ball Valves with Bronze Trim: MSS SP-110.

1. Manufacturers: Subject to compliance with requirements, available manufacturers offering products that may be incorporated into the Work include, but are not limited to, the following:

a. BrassCraft Manufacturing Company; a Masco company.
b. Conbraco Industries, Inc.; Apollo Div.
c. Lyall, R. W. & Company, Inc.
d. McDonald, A. Y. Mfg. Co.
e. Perfection Corporation; A Subsidiary of American Meter Company.

2. Body: Bronze, complying with ASTM B 584.
3. Ball: Chrome-plated bronze.
4. Stem: Bronze; blowout proof.
5. Seats: Reinforced TFE; blowout proof.
6. Packing: Threaded-body packnut design with adjustable-stem packing.
7. Ends: Threaded, flared, or socket as indicated in the valve schedule.
8. CWP Rating: 600 psig.
9. Service Mark: Initials "WOG" shall be permanently marked on valve body.

2.4 PROTECTED, STEEL, MOTOR FUEL AST:

A. Description: UL 142 and UL 2085; thermally insulated, fire-resistant and protected, double-wall, horizontal, steel tank; with primary- and secondary-containment walls and insulation and with interstitial space.

B. Construction: Concrete-Vaulted or Insulated Double-Wall.

1. Concrete-Vaulted: Fabricated with welded, carbon steel and insulation and encased in concrete; suitable for operation at atmospheric pressure and for storing motor fuel.

   a. The tank shall consist of a primary steel tank covered by a minimum of ¼" thick extruded polystyrene foam insulation panels. The secondary containment shall consist of a 30 mil thick high-density polyethylene membrane enclosing the steel tank and insulation material. The primary steel tank and the secondary containment shall be encased in six inches of monolithic reinforced concrete, with minimum design strength of 5,000 psi at 28 days.
   b. The concrete design shall include the following for long-term durability: air entrainment, water reducing admixture, and steel reinforcement. Concrete encasements with seams will not be approved. The protected and insulated tank systems shall contain no cold joints or heat sinks (heat transfer points). No steel or insulating material shall come in contact with the concrete or other corrosive material.

2. Insulated Double-Wall: Fabricated with welded, carbon steel and insulation; suitable for operation at atmospheric pressure and for storing motor fuel.

   a. The tank shall consist of an inner steel tank, encased by lightweight thermal insulation material, and an outer steel wall. The outer steel wall shall be capable of providing a minimum 110% containment of the primary storage tank's content.
   b. Steel outer wall of the tank shall be coated to prolong weather resistance and to further reduce maintenance needs. All external surfaces including the tank shall receive a commercial grit blast, epoxy primer coat, and finish coatings.
   c. The tank's interstitial space shall include a porous, lightweight monolithic thermal insulation material. The thermal insulation material shall not be exposed to weathering, shall be protected by the steel secondary containment outer wall, and shall allow liquid to migrate through the interstice to the monitoring point.

C. Protection: The AST's shall be suitable for operation at atmospheric pressure; fabricated to meet the following criteria:

1. Provide two (2) hour fire protection in accordance with UL 2085.

2. Vehicle Impact Resistance: Tanks shall be designed to have a low center of gravity that can withstand vehicle impact and tipping during earthquakes and other natural disasters.
3. Ballistic Resistance: Tanks shall withstand bullet resistance tests in compliance with UL 2085.
4. Lightning Protection: The protected and insulated AST systems shall have two (2) bolts for connecting grounding conductors for lightning protection. Grounding conductor and grounding rod materials and installation shall be in accordance with NFPA 780.

D. The primary steel tanks shall include an atmospheric vent and emergency venting in accordance with NFPA 30 Code requirements.

E. Support legs shall be monolithically cast with the concrete vault or welded to outer tank as a complete UL-listed unit.

2.5 MOTOR FUEL AST ACCESSORIES:

A. Threaded pipe connection nipples on top of tank for fill, vapor recovery, submersible pump, vent, in-tank probe, interstitial sensor, and gauging, in locations and of sizes indicated on the Plans.

B. 24” Manway Assembly for access to inside the tank with 8” Emergency Vent. The emergency vent relief system shall relieve the pressure of the primary tank if the tank pressure exceeds 1/2 psig.

C. Tank Fill Assembly: 7-gallon coated, UL listed spill containment. The assembly shall include a normally closed drain valve to release spilled product into the primary tank and a stick port for manual gauging.

D. Tank Charts: Provide (3) copies. Mount 1 copy in a glass frame secured to the wall with 4 screws adjacent to the Fuel Control Center, or as directed by the Engineer. Charts shall be calibrated to show tank capacity in gallons from feet and inches, graduated by eighths.

E. Gauge Stick: Wooden, manufacturer’s recommended length, treated after graduating to prevent swelling and damage from fuel. Gauge stick shall be graduated in feet, inches, and eighths.

F. Stair Assembly: Tank manufacturer’s standard galvanized steel stairway for access to the top of the tank. Stairs and railings shall comply with OSHA Standards.

G. Emergency Response Identification: Hazard sign that meets the requirements of NFPA 704. Hazard rating numerals shall be a minimum of 3 inches high. Sign shall be vinyl or aluminum, intended for outdoor use.

2.6 TANK INSTALLATION MATERIALS:

A. Grout: Non-shrink type.

B. Granular Fill: Refer to Form 817, Section 2.13 “Granular Fill” for material and construction methods required.

C. Concrete Pads: Comply with the requirements in CSI Division 03 Section 033000, “Cast-in-Place Concrete.”

2.7 MOTOR FUEL STORAGE TANK SPECIALTIES:

A. Submersible Pump:

1. Gasoline: Construction type AG high capacity, ¾-HP, 208-230 volt, single phase, Model No. AGUMP75S1 with AGP75S1 manifold as manufactured by Red Jacket, or an approved equal, with model length sized to fit tank.
2. Diesel: Construction type AG high capacity, 2-HP, 208-230 volt, single phase, Model No. AGUMP200S1 with AGP200S1 manifold as manufactured by Red Jacket, or an approved equal, with model length sized to fit tank.

B. Overfill Prevention:

1. Overfill Prevention Valve: Suitable for installation in aboveground motor fuel storage tanks and compatible with E85 Ethanol, provide Model No. 61fSTOP-200M as manufactured by OPW, or an approved equal, which will stop the flow of liquid into the tank when product level reaches 95% of tank capacity.
2. Lower Drop Tube: Fiberglass, compatible with overfill prevention valve, as manufactured by NOV Fiber Glass Systems, or an approved equal. Drop tube shall terminate 6-inches above the bottom of the tank, with the end of drop tube cut off at a 45-degree angle.

C. Fill Adaptor and Cap: 2-inch Tank Inlet Spout Adaptor Model No. 633AST with 2-inch locking dust cap, Model No. 634BK as manufactured by OPW, or an approved equal.

D. Vapor Recovery Adaptor and Cap: Threaded Adaptor, Model No. 323, and locking vapor adaptor cap, Model No. 323C, as manufactured by Morrison Bros., or an approved equal.

E. Stick Port Cap: Test well lockable cap and adaptor, 2” NPT.

F. Vent Cap:

1. Gasoline: Combination vent/flame arrester, Model No. 351S-0200 AV as manufactured by Morrison Bros. Co. or an approved equal.

a. Vent: Pressure vacuum type, corrosion-resistant, internal wire screen designed to protect vent lines from water, debris, and insects, and normally closed poppet.

b. Flame Arrester: Designed for installation in tank vent lines to prevent flames from passing through the vent lines into the tank's vapor space, cast iron body and cover, stainless steel arrester plate, and brass arrester grid housing

2. Diesel: Open atmospheric type, corrosion-resistant, internal wire screen designed to protect vent lines from water, debris, and insects, Model No. 23 as manufactured by OPW, or an approved equal.

G. Solenoid Valves with Thermal Pressure Relief: Two-way electrically operated, normally closed diaphragm valve to prevent accidental siphoning of fuel in case of a leak or break in the fuel line, provide Model No. 821 with Model No. 82RV relief valve as manufactured by OPW, or an approved equal.

H. External Emergency Valve: Designed for installation at the outlet of an AST where product flow must be stopped in the event of a fire. UL listed, 2" NPT, ductile iron body, with 165 degree F. fusible link, Model No. 346 as manufactured by Morrison Bros., or an approved equal.

I. Ball Valves: Full Port Two-Way as manufactured by OPW, or an approved equal.

J. Probe Cap and Adaptor: Bronze, side-sealing adaptor, side sealing cap (tapped), wire grommet to secure cables, Model No. 62M as manufactured by OPW, or an approved equal.

2.8 SOURCE QUALITY CONTROL:

A. Pressure test and inspect fuel storage tanks, after fabrication and before shipment, according to ASME and the following:

1. Horizontal, Concrete-Vaulted and Insulated, Steel ASTs: UL 142 and UL 2085.

B. Affix standards organization's code stamp.

2.9 FUEL DISPENSERS:

A. Dispensers:

1. Gasoline and Diesel: Subject to compliance with requirements, single product dispensers shall be E3/G7207D/2GHJKRX/S3 as manufactured by Wayne, or an approved equal. Electronic-type, pedestal-mounted, standard capacity remote dispenser with lane-oriented nozzle boot, suitable for dispensing a single product

through 1 hose. Each component in the product path shall be compatible with dispensing E85 Ethanol. Cabinet shall be heavy gauge stainless steel including cabinet top, sides, base, and the hinged cabinet door panel shall be stainless steel.

2. High Flow Diesel: Subject to compliance with requirements, single product dispensers shall be 3/G7227D/GHJKR/S3 as manufactured by Wayne, or an approved equal. Electronic-type, pedestal-mounted, super high capacity remote dispenser with lane-oriented nozzle boot, suitable for dispensing a single product through 1 hose. Cabinet shall be heavy gauge stainless steel including cabinet top, sides, base, and the hinged cabinet door panel shall be stainless steel.

B. Dispenser Product ID Panels: 22.5-inch wide by 2.64-inch high polycarbonate panels as manufactured by Gasoline Advertising Products, or an approved equal:

1. Diesel: Part #DG00-PID-DSL, color coded “Yellow.”
2. Gasoline: Part #DG00-PID-UNL, color coded “Silver.”

C. Dispenser Pedestal-Mount Kit: Manufacturer’s low profile stainless steel dispenser platform for mounting dispenser with factory installed penetration fittings for product piping and electrical conduits.

D. Dispenser and FMU Island Forms: Prefabricated, stainless steel, 13-inches deep by the width and the length indicated on the Plans as manufactured by OPW, or an approved equal

E. Emergency Shear Valve (Product): Cast-iron body double-poppet-type, Model No. 10P-0152E85 and manufacturer standard mounting kit Model No. 10UBK-015 as manufactured by OPW, or an approved equal.

F. Filter and Filter Adapter: 1-inch spin-on filter with adapter, suitable for mounting within dispenser, as manufactured by Cim-Tek, or an approved equal:

1. Gasoline and Diesel: Model No. 400MB-10.
2. High Flow Diesel: Model No. 800BMG-10.

G. High hose retractors and static wires: Manufacturer standard with foot base and dispenser bracket.

H. Breakaway Hose Couplings:

1. Gasoline and Diesel: ¾-inch diameter re-connectable breakaway coupling Model No. 66REC as manufactured by OPW, or an approved equal.
2. High Flow Diesel: 1-inch diameter re-connectable breakaway coupling Model No. 66RB as manufactured by OPW, or an approved equal.

I. Hose:

1. Black rubber, smooth bore, whip hose with stainless steel fittings.

a. Hose Length from Dispenser to Breakaway Coupling: 17-feet.
b. Hose Length from Breakaway Coupling to Nozzle: 8-inches.
c. Diameter:

1) Gasoline and Diesel: ¾-inch.
2) High Flow Diesel: 1-inch.

J. Swivels:

1. Gasoline and Diesel: Multi-plane swivel designed for use with unleaded, diesel, and all ethanol blends through E100 fuel with aluminum with electroless nickel plating, fluorosilicone inner O-ring, fluorocarbon outer O-ring, sized to fit hose and nozzle, Model No. 6350 as manufactured by Husky Corporation, or an approved equal.
2. High Flow Diesel: Multi-plane swivel designed for use with diesel fuel with aluminum body, zinc adaptors, dual Buna-N seals, nylon bearings, sized to fit hose and nozzle, Model No. 241TPS-1000 as manufactured by OPW, or an approved equal.

K. Nozzles:

1. Gasoline: Aluminum body and spout with 13/16" O.D., automatic-type, with full rubber hand insulator Model No. 21Ge-0492, Color-coded "Black" as manufactured by OPW, or an approved equal .
2. Diesel: Aluminum body and spout with 15/16" O.D., automatic-type, with full rubber hand insulator, Model No. 1A, color-coded "Yellow" as manufactured by Husky Corporation, or an approved equal.
3. High Flow Diesel: Aluminum body and spout with 1-3/16" O.D., automatic type, with full rubber hand insulator, Model No. 7H-0900, color-coded "Yellow" as manufactured by OPW, or an approved equal.

2.10 AUTOMATED FUEL MANAGEMENT SYSTEM:

A. Subject to compliance with requirements, the automated fuel management system shall be a FUELMASTER FMU2500 as manufactured by SYN-TECH Systems, Inc. (telephone number 1-800-888-9136). No "or equals" will be permitted. The automated fuel management system (hereinafter referred to as the system) is required to be fully compatible with all requirements of the ConnDOT Standard Automated Fuel Management System including, but not limited to, the following:

1. The ability to interface with the existing central location (Headend), located at 2800 Berlin Turnpike, Newington, CT.
2. The ability to accept the existing ConnDOT issued read/write keys.
3. Interface with the tank monitoring system specified in CSI Division 13 Section 132180, "Tank Monitoring System."

B. The system shall include the following operational requirements:

1. Allow for unattended operation, seven days a week, 24 hours a day.
2. Turn fuel dispensers on and off.
3. Monitor and record up to 8 hoses dispensing simultaneously.
4. Lock out any unauthorized keys.
5. Limit the fueling product options for any key.

C. The system shall include the following components:

1. Fuel Management Unit (FMU): Flexible, modular design, to accept any future system upgrades, with the following features: key reader, LCD display to prompt vehicle operators, control keys for data input by vehicle operators, and surge suppressor. FMU shall be suitable for outdoor installation, being capable of resisting the affects or rain, snow, and blowing sand. FMU shall have an operating temperature range of -60 to 140° Fahrenheit. FMU shall have the ability to store all collected data for 3 months. Memory shall be removable, with the capability of being installed in an operational FMU for data recovery.
2. Dispenser-Mounted Pulse Transmitters: Individually set for any number of pulses from 1 to 1000 for each unit of measurement for every hose on every dispenser.
3. Communications Interface (Network Card): Provides the tank monitoring system pass-through capability so that the tank monitoring and fuel management reports are uploaded to the Headend via 10/100 Ethernet communications.

D. The following information shall be recorded by the system for each fueling transaction: user identification number, vehicle odometer/hourmeter, vehicle number, quantity of fuel dispensed, fuel site, date and time, hose number and product number, and key type.

2.11 FUEL CONTROL CENTER:

A. Panelboards: Comply with requirements in CSI Division 26 Section 262416, "Panelboards".

B. Shunt Trip Device: Comply with requirements in CSI Division 26 Section 262816, "Enclosed Switches and Circuit Breakers ".

C. Emergency Shut-off (Quick Stop Buttons): Provide on exterior of building and at Fuel Control Center. The quick stop button functions to remove power by depressing the red mushroom-shaped button. Power restored by manually resetting the shunt trip breaker and turning the button clockwise a partial turn until it pops back out to the reset position.

D. Emergency Telephone: Weather-resistant, wall mounted, ADA compliant emergency telephone that provides two-way communications with the press of a single button. Enclosure shall be cast aluminum with epoxy safety yellow finish, NEMA 3R rated with an LED providing visual indication that a call was received and “HELP” label with

braille located next to the pushbutton. Device shall not require any battery or external power. Provide Red Alert Model No. 393AL-001 as manufactured by GAI-Tronics or an approved equal. Provide line seizure relay Model No. LSR-1 as manufactured by Viking Electronics or an approved equal, to allow an existing phone line to be shared with an emergency telephone.

E. Fuel Island Signage: Locate as directed by Engineer.

1. Material and Thickness: Multilayer, multicolor, plastic labels for mechanical engraving, 1/16 inch thick, and having predrilled holes for attachment hardware.
2. Letter Color: Red.
3. Background Color: White.
4. Minimum Label Size: Length and width vary for required label content, but not less than 2-1/2 by 3/4 inch.
5. Minimum Letter Size: 1/4 inch for name of units if viewing distance is less than 24 inches, 1/2 inch for viewing distances up to 72 inches, and proportionately larger lettering for greater viewing distances. Include secondary lettering two-thirds to three-fourths the size of principal lettering.
6. Fasteners: Suitable for mounting to masonry.
7. Label Content (Fuel Island): Label shall read as follows:

EMERGENCY ISLAND POWER SHUTOFF
AND PHONE LOCATED ON BUILDING

PHONE WILL AUTOMATICALLY CALL 911
UPON ACTIVATION

STAY OUTSIDE OF VEHICLE DURING FUELING AND
IN SIGHT OF NOZZLE DURING DISPENSING

IN CASE OF FIRE OR SPILL USE
EMERGENCY STOP BUTTON ON BUILDING

REPORT INCIDENT USING EMERGENCY PHONE

8. Label Content (Emergency Phone): Label shall read as follows:

EMERGENCY
POWER SHUTOFF
AND PHONE

F. Disconnect Switches: These disconnects shall switch the neutral conductor used for the control circuits in the dispensers. Comply with requirements in CSI Division 26 Section 262816, "Enclosed Switches and Circuit Breakers ".

G. Switches: Comply with requirements in CSI Division 26 Section 262726, "Wiring Devices".

H. Surface Mounted Communication Jack: RJ45 jack that fits in a single gang opening with one (1) receptacle, color orange, for Category 6.

I. Conduit: Comply with requirements in CSI Division 26 Section 260533, "Raceways and Boxes for Electrical Systems".

J. Wire: Comply with requirements in CSI Division 26 Section 260519, "Low-Voltage Electrical Power Conductors and Cables ".

K. Submersible Pump Control Boxes: Single-phase control box with contactor relay and dispenser hook isolation. Control boxes shall be Model No. 880-047-1, as manufactured by Red Jacket, or an approved equal.

L. Explosionproof Junction Boxes: Comply with requirements in CSI Division 26 Section 260533, "Raceways and Boxes for Electrical Systems".

M. Explosionproof Fittings: Comply with requirements in CSI Division 26 Section 260533, "Raceways and Boxes for Electrical Systems".

2.12 FIRE EXTINGUISHERS:

A. NFPA Compliance: Fabricate and label fire extinguishers to comply with NFPA 10, "Portable Fire Extinguishers."

B. Listed and labeled for type, rating, and classification by an independent testing agency acceptable to authorities having jurisdiction.

1. Provide fire extinguishers approved, listed, and labeled by UL or FMG.

C. Fire Extinguishers: UL-rated 40-B:C.

1. Available Manufacturers: Subject to compliance with requirements, available manufacturers offering products that may be incorporated into the Work include, but are not limited to, the following:

a. Amerex Corporation.
b. Kidde Residential and Commercial Division; Subsidiary of Kidde plc.
c. Potter Roemer LLC.
d. Tyco Fire Protection Products

D. Fire-Protection Cabinet: Subject to compliance with requirements, provide Model No. FT-POLY-CAB as manufactured by Brooks Equipment Company, Inc., or approved equal.

1. Cabinet Type: Suitable for fire extinguisher.
2. Cabinet Construction: Weatherproof, suitable for outdoor installation.
3. Cabinet Material: Nonmetallic with UV inhibitors, or metallic with rust protection.
4. Surface-Mounted Cabinet: Cabinet box fully exposed and mounted directly on surface with no trim.
5. Door Style: Match cabinet material.
6. Door Glazing: Clear, transparent break-style glass or acylic.
7. Door Hardware: Manufacturer's standard door-operating hardware.
8. Accessories:
    a. Mounting Bracket: Manufacturer's standard steel, designed to secure fire extinguisher to fire-protection cabinet, of sizes required for types and capacities of fire extinguishers indicated, with plated or baked-enamel finish.
    b. Break-Glass Strike: Manufacturer's standard metal strike, complete with chain and mounting clip, secured to cabinet.
    c. Door Lock: Cylinder lock.
    d. Identification: Lettering complying with authorities having jurisdiction for letter style, size, spacing, and location.
        1) Identify fire extinguisher in fire-protection cabinet with the words "FIRE" or “FIRE EXTINGUISHER”.
            a) Location: Applied to cabinet sides and/or cabinet door.

PART 3 - EXECUTION

3.1 EXCAVATION AND BACKFILL:

A. Refer to 817 Section 2.02, “Roadway Excavation, Formation of Embankment and Disposal of Surplus Material” and Section 2.05, “Trench Excavation” for excavating, trenching, and backfilling requirements.

B. Granular Fill shall be installed in accordance with Form 817 Article 2.13 beneath the concrete pads and apron as indicated on the plans. Protect buried items during compaction.

    1. Concrete Pads: Provide a minimum of 6-inches of granular fill for concrete pads, compacted to support the concrete pad installation.

C. No backfilling over any underground piping or electrical connections may take place until the work is inspected by the Engineer and the authorities having jurisdiction. Failure to have work inspected will result in the Contractor uncovering work to allow for inspection.

3.2 OUTDOOR PIPING INSTALLATION:

A. Install metal pipes and tubes, fittings, and valves at piping connections to AST.

B. Support product piping with galvanized strut mast and pipe clamp mounted to the tank, tank pad, and metal beam rail posts. Support product piping at a minimum height of 6 inches above grade or as directed by Engineer and provide supports every 8-feet of horizontal run.

C. Install fittings for changes in direction in rigid pipe.

D. Install system components with pressure rating equal to or greater than system operating pressure.

3.3 VALVE INSTALLATION:

A. Install valves in accessible locations.

B. Protect valves from physical damage.

3.4 PIPING JOINT CONSTRUCTION:

A. Ream ends of pipes and tubes and remove burrs.

B. Remove scale, slag, dirt, and debris from inside and outside of pipe and fittings before assembly.

C. Threaded Joints: Thread pipe with tapered pipe threads according to ASME B1.20.1. Cut threads full and clean using sharp dies. Ream threaded pipe ends to remove burrs and restore full ID. Join pipe fittings and valves as follows:

1. Apply appropriate tape or thread compound to external pipe threads unless dry seal threading is specified.
2. Damaged Threads: Do not use pipe or pipe fittings with threads that are corroded or damaged. Do not use pipe sections that have cracked or open welds.

3.5 PAINTING:

A. Paint exposed, exterior metal piping and piping specialties, except components with factory-applied paint or protective coating.

1. Alkyd System: MPI EXT 5.1D.

a. Prime Coat: Alkyd anticorrosive metal primer.
b. Intermediate Coat: Exterior alkyd enamel matching topcoat.
c. Topcoat: Exterior alkyd enamel
d. Color: Gray

3.6 MOTOR FUEL AST INSTALLATION:

A. Excavate as described herein and as shown on the Plans.

B. Set tank on concrete pad and anchor in accordance with manufacturer's instructions.

1. Install bearing pads as recommended by manufacturer.

C. Each component of the storage tank system shall be installed as shown on the Plans and in accordance with manufacturer recommendations. Additional installation requirements of the storage tank system are described in subsequent portions of this Section where applicable.

D. Connect piping.

E. Pressure Testing of Tank and Piping: Refer to Part 3.7, "Field Quality Control."

F. Supplying Fuel:

1. Refer to Part 1.8 "Coordination" for filling tanks. Supply appropriate fuel in accordance with specifications set forth in the most current State of Connecticut, Department of Administrative Services contract award for:

- 0035-066 - Gasoline, Automotive Unleaded
- 0035-042 - Diesel Fuel No. 1 & 2

2. To determine product suitability for application into State equipment, Contractor will be responsible for testing sample from tanker at time of delivery. Written results of testing will be provided within 7 days to the Engineer. Contracts with corresponding detailed specifications can be obtained by accessing the State of Connecticut, Department of Administrative Services' website at http://das.ct.gov/Purchase/Commodity.htm.
3. Prior to the issuance of the Certificate of Compliance, the Contractor shall fill all motor fuel tanks in accordance with the Contract requirements.
4. The Contractor shall provide to the Engineer 3 calendar days notice of its intent to fill tanks. Filling of tanks shall be witnessed by a representative of the Department.

G. Apply Hazard Sign directly to tank in a visible location.

1. Hazard ratings for Diesel:

a. Health (Blue): 0
b. Fire (Red): 2
c. Instability (Yellow): 0
d. Special Hazard (White): None

2. Hazard ratings for Gasoline.

a. Health (Blue): 1
b. Fire (Red): 3
c. Instability (Yellow): 0
d. Special Hazard (White): None

3.7 FIELD QUALITY CONTROL:

A. Perform tests and inspections.

1. Tanks: Hydrostatic or compressed-air test pressures for horizontal, shop-fabricated, aboveground storage tanks: Isolate product piping from the tanks during testing. In-tank probes shall not be installed in the tanks during testing. Maintain the test pressure for one hour.

a. Primary Tanks: Minimum 3 psig and maximum 5 psig.

2. Piping: Minimum hydrostatic or pneumatic test-pressures measured at highest point in system. Soap pipe fittings.

a. Product Piping: Minimum 1.5 times the designed working pressure but not less than 50 psig nor more than the manufacturer's recommended pressure rating for minimum 3 hours.
b. Isolate storage tanks if test pressure in piping will cause pressure in storage tanks to exceed 10 psig.

B. Piping and equipment will be considered defective if it does not pass tests and inspections. Defective piping and equipment shall be repaired or replaced, and then retested.

C. Prepare test and inspection reports.

3.8 FUEL DISPENSERS:

A. Bolt fuel dispensers into place and make all necessary piping connections. Secure shear valves to dispensers. Dispenser pedestal shall be anchored to the concrete with stainless steel anchors. High hose retractors shall be anchored to the concrete with stainless steel anchors.

3.9 AUTOMATED FUEL MANAGEMENT SYSTEM:

A. The automated fuel management system Installer shall provide a fully operational system including, but not limited to, the following:

1. Fuel Management Unit (FMU)
2. Dispenser-Mounted Pulse Transmitters and all necessary conduit

3. Communications Interface (Network Card): Provides the tank monitoring system pass-through capability so that the tank monitoring and fuel management reports are uploaded to the Headend via 10/100 Ethernet communications.
4. The following information shall be recorded by the system for each fueling transaction: user identification number, vehicle odometer/hourmeter, vehicle number, quantity of fuel dispensed, fuel site, date and time, hose number and product number, and key type.
5. Coordinate with ConnDOT Fuel Control for FMU configuration.
6. Coordinate network communications with ConnDOT network administrator.

B. Power Requirements for FMU: 120 volts, 60 Hz, from a separate, dedicated circuit from the Fuel Control Center Panel.

C. FMU shall be anchored to the concrete only with stainless steel hardware.

3.10 FUEL CONTROL CENTER:

A. Install all necessary conduit and wiring. A green bond wire shall be run in all conduit, terminating at Fuel Control Center Panel.

B. Conduit from the building to the base of each dispenser, submersible pump, FMU, level sensors, and island light fixture shall be provided with explosionproof fittings.

C. All E.Y. fittings shall be properly sealed. Leave close-up plugs hand tight after sealing to provide for inspection of these fittings.

D. Install junction boxes beneath dispensers to facilitate future maintenance.

E. Each submersible pump shall have a separate, dedicated circuit from Fuel Control Center Panel, wired through its own disconnect switch, control box, and dispenser hook isolation. The solenoid valve shall be powered and controlled from the submersible pump control box.

3.11 FIRE EXTINGUISHERS:

A. Examine fire extinguishers for proper charging and tagging.

1. Remove and replace damaged, defective, or undercharged fire extinguishers.

B. Proceed with installation only after unsatisfactory conditions have been corrected.

C. General: Install fire extinguishers**,** mounting brackets, and fire-protection cabinet in locations indicated on the plans and in compliance with requirements of authorities having jurisdiction, 54 inches above finished grade to top of fire extinguisher.

D. Fire-Protection Cabinet: Fasten cabinets to surface, square and plumb.

1. Fasten mounting bracket to inside surface of fire-protection cabinets, square and plumb.

E. Remove temporary protective coverings and strippable films, if any, as fire-protection cabinets are installed unless otherwise indicated in manufacturer's written installation instructions.

F. Adjust fire-protection cabinet doors to operate easily without binding. Verify that integral locking devices operate properly.

G. On completion of fire-protection cabinet installation, clean interior and exterior surfaces as recommended by manufacturer.

H. Touch up marred finishes, or replace fire-protection cabinets that cannot be restored to factory-finished appearance. Use only materials and procedures recommended or furnished by fire-protection cabinet and mounting bracket manufacturers.

I. Replace fire-protection cabinet that have been damaged or have deteriorated beyond successful repair by finish touchup or similar minor repair procedures.

3.12 DISPENSER ISLAND, APRON, AND PAD FOR TANKS:

A. Construct the concrete apron with bollards, and pads for the tanks, dispensers, and FMU as shown on the Plans. Concrete installation requirements are specified in CSI Division 03 Section 033000, “Cast-in-Place Concrete.”

3.13 PIPING SCHEDULE:

A. Product Piping, Aboveground: 1-1/2-inch black steel pipe and pipe fittings.

B. Thermal Pressure Relief Piping: 1/2-inch black steel pipe and pipe fittings.

C. AST Pipe Risers: 4-inch galvanized steel pipe and fittings.

D. AST Vent Pipe and Fittings, Aboveground: 2-inch galvanized steel pipe and pipe fittings.

3.14 TRAINING:

A. Refer to Form 817 Article 1.20-1.08.14 subsection 3 for additional information.

B. Engage a factory-authorized service representative for the automated fuel management system for a 4-hour on-site class to train the Owner’s maintenance personnel on all operating, routine maintenance, and service procedures. Provide copies of all training materials to all in attendance.

END OF SECTION 132160

SECTION 132180 - TANK MONITORING SYSTEM

PART 1 - GENERAL

1.1 SUMMARY:

A. This Section includes the complete tank monitoring system for aboveground and underground storage tanks as indicated on the Plans.

B. Each component of the tank monitoring system shall be compatible with the dispensing of E85 Ethanol. Where model numbers are used herein, but are not compatible with E85 Ethanol, the appropriate E85 Ethanol compatible component shall be supplied at no additional cost to the Engineer.

C. The following contain requirements that relate to this Section:

1. CSI Division 13 Section 132160, “Installation of New Fuel Facility.”

ACTION SUBMITTALS:

D. Submit the following in accordance with Form 817 Article 1.20-1.05.02 and NOTICE TO CONTRACTOR – SUBMITTALS.

E. Product Data: Include rated capacities of selected model clearly indicated, furnished specialties and accessories; wiring diagrams; and installation and start-up instructions.

1. Spare Parts: Include name, address, and telephone number of in-state supplier of spare parts. No out-of-state suppliers shall be permitted.
2. Include sequence of operation for monitoring of oil-water separator.

1.2 INFORMATIONAL SUBMITTALS:

A. Quality Assurance Submittals:

1. Installer Certifications as specified in Part 1.5, “Quality Assurance.”
2. Field quality control test reports as specified in Part 3.3, “Field Quality Control.”

1.3 CLOSEOUT SUBMITTALS:

A. Operation and Maintenance Data: Include in the operation and maintenance manuals specified in Form 817 Article 1.20-1.08.14 subsection 2 and described in NOTICE TO CONTRACTOR – CLOSEOUT DOCUMENTS.

1.4 QUALITY ASSURANCE:

A. The tank monitoring system manufacturer shall identify the approved distributor and repair staff located within a 50 mile radius of the Project Site, staffed with factory trained engineers fully capable of providing instruction, routine maintenance and 24 hour emergency repair service on all system components. Emergency repair service is to be available within a 24-hour period of time. Spare parts required for the system installed should be available within 2-4 calendar days.

B. The Tank Monitoring System Installer shall provide the engineering, installation, calibration, software programming and check-out necessary for a complete and fully operational tank monitoring system.

C. The Tank Monitoring System Installer shall be a certified to program and start-up the system.

D. The Tank Monitoring System Installer shall have:

1. Adequate experience and verifiable history in the installation of tank monitoring systems matching the criteria defined in this Specification.
2. Proven expertise and experience in dealing with coordination of installing tank monitoring systems for municipal fueling facilities.

PART 2 - PRODUCTS

2.1 MANUFACTURERS:

A. Available Manufacturers: Subject to compliance with requirements, manufacturers offering products that may be incorporated into the Work are limited to the following:

1. Pneumercator.

B. "Or Equal" manufacturers will not be considered for this project due to the need to interface with the existing tank monitoring system console (Model No. TMS-3000).

C. The system is <u>required</u> to be fully-compatible with the existing ConnDOT standard Automated Fuel Management System, including the ability to interface with the Headend through a field installed network interface card compatible with the existing tank monitoring system console.

2.2 CONSOLE:

A. Communications Wiring and Devices. The system shall have a minimum of 4 communications ports with the following capabilities:

1. The ability to communicate with locally attached electronic devices (FMU and printer) through RS-232 ports.
2. The system shall have the ability to communicate with a remote location via a network connection. An internal network card (Part No. 900571-3) shall be installed within the console along with the replacement of the processor (Part No. 900430-1).

2.3 IN-TANK PROBES:

A. The probes shall be magnetostrictive type suitable for leak detection and inventory management in both underground and aboveground storage tanks. Unless otherwise noted, probes shall include 2 floats (product and water), and shall also include a minimum of 5 temperature sensors along its length to allow product temperature averaging.

1. Temperature measurement accuracy of +/- 0.5°.
2. Level measurement accuracy of +/- .0005-inch.

B. The probes shall be gasoline, ethanol, benzene, and oil-resistant. The probes shall be UL-listed as intrinsically safe and shall utilize digital or time-based transmission techniques for high noise immunity and fault detection.

C. Leak Detection: Capable of manually or automatically performing a static tank tightness test to an accuracy of 0.1-gph, with a 99% probability of detection [P(D)] and a 1% probability of false alarm [P(FA)].

1. System shall be third-party certified to be in accordance with EPA standards for 0.1-gph annual tightness test and for 0.2-gph monthly monitoring.

D. The probes shall be capable of continuously gauging the water level from within 0.75-inch off of the bottom of the tank to a depth of at least 10-inches for riser pipe installations.

E. For oil-water separator applications, the probes shall be capable of continuously gauging the product and water levels from within 3-inches off the bottom of the tank. The system shall automatically calculate and output the volume (gallons) and level (inches) of product and of water in the oil-water separator.

F. The probes shall be supplied with the manufacturer's standard probe installation kits and wiring.

2.4 INTERSTITIAL SENSORS:

A. Wet Monitoring:

1. The hydrostatic sensors shall perform automatic, continuous leak sensing by monitoring the liquid level in the reservoir of a brine-filled interstitial space (annulus) of double-wall tanks, to detect a breach in the inner or outer shell. Single float sensors shall include a float and reed switch assembly. The contact shall be a normally closed dry contact.
2. The sensors shall be unaffected by hydrocarbon vapors, and shall be easily installed and removed without damage. Sensors shall be field replaceable, reusable, and testable for regulatory purposes.
3. The sensors shall be supplied with a lockable, watertight riser cap to prevent accidental spills into the tank reservoir. The cap shall be equipped with a vent tube to vent air out of the reservoir area and prevent liquids from entering into the reservoir.
4. The sensors shall be supplied with the manufacturer's standard sensor installation kits and wiring.

B. Dry Monitoring:

1. The sensors shall perform automatic, continuous leak sensing by monitoring the dry interstitial space (annulus) of double wall tanks. Sensors shall be a non-discriminating type, sensing only wet or dry conditions.
2. The sensors shall be unaffected by hydrocarbon vapors, and shall be easily installed and removed without damage. Sensors shall be field replaceable, reusable, and testable for regulatory purposes.
3. The sensors shall be supplied with the manufacturer's standard sensor installation kits and wiring.

2.5 TANK OVERFILL ALARM:

A. Remote external audible and visual overfill alarm annunciator shall be housed in a weatherproof enclosure. The overfill alarm shall activate if a tank product level reaches the overfill alarm setpoint of 90% capacity.

B. Remote alarm acknowledge unit shall be housed in a weatherproof enclosure. Acknowledge unit shall silence audible and visual overfill alarms.

2.6 SOFTWARE:

A. Network Communications for Remote Alarming/Reporting:

1. The manufacturer shall provide its communications/database software package and license (Headend) to poll remote tank monitoring sites from a total of five (5) locations, including the central location (2800 Berlin Turnpike, Newington, CT), via a network connection.
2. The Headend operator shall connect to remote sites by selecting the user-definable name associated with the site.

3. The Headend operator shall be able to connect to the system and gain access to the full control, reporting, troubleshooting, and system modification capabilities described in this specification.
4. The Headend shall provide a communications mode, in which it can automatically and continuously poll locations that have been designated for data retrieval, and store data in a standard database format.
5. The system shall have the ability to automatically upload all alarms, reports, logs, and other features as described in this specification. The software package shall provide the ability to program the system from remote locations.
6. In the event that the system is unable to connect with the Headend, it shall continue to attempt communication on a predetermined interval until communication is successful.
7. The stored data shall be easily transferable to other software packages, such as spreadsheets, database packages, etc., for data manipulation.

B. Reports and Logs. The following reports and logs shall be provided for each tank as indicated on the Plans:

1. Environmental Compliance Reports. The system shall have the ability to capture the following environmental compliance reports, as well as to provide hard copies of these reports at the console.

   a. In-Tank Warnings and Alarms.
   b. In-Tank Tightness Test Results.
   c. Liquid Sensor Warnings and Alarms.
   d. System Hardware and Software Errors.
   e. System Status Messages.
   f. Normally-closed Sensor warning and alarm conditions.
   g. External input messages.

2. The system shall also generate hard copy reports at the console for system errors, system clock and calendar, and system setup and configuration data.

C. Reports and Logs. The following reports and logs shall be provided for each gasoline tank and diesel fuel tank as indicated on the Plans.

1. Inventory Management Reports shall be generated for each tank either automatically a minimum of three times per day (programmable) or manually. In addition to the system capturing this data, hard copies of the reports will be generated at the console. Inventory Reports shall include the tank identification, product name, time and date, product level and volume, water level and volume, product temperature, gross volume, temperature compensated net volume, percent capacity, 90% ullage, and last in-tank leak test result.
2. Product Delivery Reports shall be generated for each tank automatically after a delivery to the tank is complete. In addition to the system capturing this data, hard copies of the report will be generated at the console. Fuel Delivery Reports shall include the tank identification, product name, time and date, starting and

ending product levels and volumes, starting and ending product temperatures, and the net product volume increase.

3. Product Order Reports shall be manually generated for each tank. In addition to the system capturing this data, hard copies of the reports will be generated at the console. Fuel Order Report shall include the average daily product usage calculated from the last delivery, the total and usable inventory, the remaining product supply in days, and the maximum order amount (90% ullage) at the time of report generation.
4. Water Removal Report shall be generated for each tank automatically upon the removal of water from each tank. In addition to the system capturing this data, hard copies of the reports will be generated at the console. Water Removal Reports shall include the tank identification, product name, time and date; and starting and ending product volumes, water volumes, gross volume, percent capacities, and 90% ullage.

D. Reports and Logs. The following reports and logs shall be provided for each oil-water separator as indicated on the plans.

1. Inventory Management Reports shall be generated for each oil-water separator either automatically a minimum of three times per day (programmable) or manually. In addition to the system capturing this data, hard copies of the reports will be generated at the console. Inventory Reports shall include the oil-water separator identification, product name, time and date, the last in-tank leak test result, the product level and volume, and the water level and volume.

E. Alarms.

1. The system shall provide audible and visual indication of all system, in-tank leak (3.0-gph, 0.2-gph, and 0.1-gph failures), and external sensor (product, water, sensor out) alarm conditions. The system shall also capture this data, and hard copies will be generated.
2. The system shall provide the operator the ability to disable the audible portion of an alarm. The visual portion of an alarm shall not be disabled until the alarm condition has been corrected.
3. The system alarms include:

    a. High High Limit (Overfill).
    b. High Limit.
    c. Low Inventory Limit
    d. High Water Limit.
    e. Temperature.
    f. Theft.
    g. Delivery needed alarm.
    h. Periodic warning and alarm.
    i. Annual warning and alarm.
    j. Non-IS contact closure input.
    k. IS (liquid) sensor input.

l. System error.
m. Power recovery.
n. Leak Test Failed.

4. The product limit alarms identified in subpart a, b, and c in Part 3 above shall be programmable in units of volume, percent volume, or level.
5. The operator shall have complete programming control to determine which alarm conditions, if any, shall control pumps, valves, or any other devices. Unless the system is set up to shut part of the system down on alarm, system shall remain operational during all alarm conditions.

F. Diagnostics and Troubleshooting.

1. The system shall provide the manufacturer's standard diagnostic and troubleshooting capabilities to facilitate field service. These capabilities shall include, but are not limited to, the following:

a. Identifying the location of the malfunction, whether in the field or console.
b. The system shall be capable of detecting and reporting corruption of configuration and set-up data. Affected system function(s) shall be disabled until corruption is corrected.
c. The system shall be capable of limiting the range of selections on input to only "acceptable" values, or the system shall be capable of scanning operator-entered configuration and set-up data to check for "acceptable" values. Values that result in improper calculations or required entries that have not been defined by the operator shall generate a warning report, and shall disable the affected system function(s).
d. The system shall be capable of detecting and reporting a power-up sequence, including power loss and recovery dates and times.
e. The system shall be capable of ensuring the integrity of its hardware and software.
f. Supervised wiring between the console and the interstitial sensors to identify short or open circuited wiring. System shall identify fault to the failed sensor.
g. Supervised wiring between the console and the in-tank probes to detect a fault, either as failed hardware or as a result of faulty wiring. System shall identify fault to the tank.

2. The system shall generate hard copy reports of the diagnostic information, including the alarm history and alarm status at the console.

2.7 RELATED ELECTRICAL WORK:

A. Conduit: Comply with requirements in CSI Division 26 Section 260533, "Raceway and Boxes for Electrical Systems".

B. Explosionproof Fittings: Comply with requirements in CSI Division 26 Section 260533, "Raceway and Boxes for Electrical Systems".

PART 3 - EXECUTION

3.1 EXAMINATION:

A. Examine areas and conditions under which the tank monitoring system is to be installed. Do not proceed with work until unsatisfactory conditions have been corrected in manner acceptable to the Tank Monitoring Installer.

3.2 INSTALLATION REQUIREMENTS:

A. All probe and leak sensor inputs shall be protected against damage from short circuit conditions due to inadvertent field wiring errors.

B. In-tank Probes.

1. Probes, probe installation kits, and wiring shall be installed according to manufacturer-supplied installation manuals and Plans.
2. Probe assemblies for monitoring product and water levels are required for all storage tanks as indicated on the Plans.
3. Probe assemblies in underground storage tanks shall top-mount from a 4-inch diameter probe riser pipe. Riser installation is not work of this Section; risers shall be installed by the applicable CSI Section and as indicated on the Plans.
4. Probe leader cables to connect inside watertight junction box, sealed off with an explosion proof fitting, for connection to console.

C. Interstitial Sensors:

1. Sensors and wiring shall be installed according to manufacturer-supplied installation manuals and plans.
2. Sensors for monitoring the interstitial spaces are required for all double-wall underground and aboveground storage tanks as indicated on the Plans.
3. Sensor Assemblies:
   a. Underground Storage Tanks: Top-mount in a 4-inch diameter sensor riser pipe installed in the annulus of the tank. Riser installation is not work of this Section; risers shall be installed by the applicable CSI Section and as indicated on the Plans.
   b. Aboveground Storage Tanks: Top-mount in factory installed 2” nipple through monitor pipe/leak detector tube.
4. Sensor leader cables to connect inside watertight junction box, sealed off with an explosion proof fitting, for connection to console.

D. Tank Overfill Alarm:

1. Remote alarm annunciator and acknowledge unit wiring shall be installed according to manufacturer-supplied installation manuals.
2. The alarm light shall be visible and the alarm horn shall be audible within the fuel tank filling area.
3. The acknowledge unit shall be accessible to the tank filling attendant.
4. Remote alarm annunciator and acknowledge unit shall be mounted near the tank filling sites for the gasoline and diesel fuel tanks and for the fuel oil tank as indicated on the Plans.

E. Console shall be mounted and wired according to manufacturer-supplied installation manuals, with all intrinsically safe field wiring enclosed in dedicated conduit and separate from all other wiring. The system's high voltage wiring may share existing conduit with other high voltage devices in accordance with applicable guidelines published in the NEC.

F. Console power requirements: 120-volts, 60-Hz, from a separate, dedicated circuit from the Fuel Control Center panel.

G. Related Electrical Work: Install conduit. Seal E.Y. fittings. Leave close-up plugs hand tight after sealing to provide for inspection of these fittings.

3.3 FIELD QUALITY CONTROL:

A. Engage a factory-authorized service representative to inspect and test the system and to perform start-up service. Power shall not be applied to the system prior to start-up.

B. Perform all necessary testing and run diagnostic tests to ensure proper operation. Test equipment as recommended by manufacturer. Generate all software and enter all database information necessary to perform the sequence of control and specified software routines.

1. An acceptance test shall be performed in the presence of the Engineer.

C. The manufacturer shall provide a written certification of installation, start-up, and calibration of the complete system.

D. The manufacturer shall supply third-party documentation for all products certifying that the performance meets or exceeds EPA requirements.

3.4 TRAINING:

A. Refer to Form 817 Article 1.20-1.08.14 subsection 3 for additional information.

B. Engage a factory-authorized service representative for an 8-hour on-site class to train Owner's maintenance personnel on all installation, programming, troubleshooting, operating, routine maintenance, and service procedures.

END OF SECTION 132180

SECTION 221325 – OIL-WATER SEPARATOR

PART 1 - GENERAL

1.1 SUMMARY:

A. The Contractor shall install the complete oil-water separator system, except as otherwise noted, in conformity with the lines, grades, dimensions and details shown on the Plans and as described herein.

B. The manhole arrangement described herein and shown on the plans is based upon the oil-water separator identified herein. “Or Equal” submissions will address the need for an alternative manhole arrangement, if necessary, that is acceptable to the Designer. Alternative manhole arrangements will also be at no additional cost to the Engineer.

C. Related CSI Sections include the following:

1. Division 13 Section 132180, "Tank Monitoring System" for underground storage tank monitoring system.

1.2 DEFINITIONS:

A. FRP: Glass-fiber-reinforced plastic.

1.3 SUBMITTALS:

A. Submit the following in accordance with Form 817 Article 1.20-1.05.02 and NOTICE TO CONTRACTOR – SUBMITTALS.

B. Product Data: For each type of product indicated. Include construction details, material descriptions, and dimensions of individual components and profiles. Also include, where applicable, rated capacities, operating characteristics, and furnished specialties and accessories.

1. Spare Parts: Include name, address, and telephone number of in-state supplier of spare parts. No out-of-state suppliers shall be permitted.

C. Shop Drawings: Indicate all critical dimensions, locations of all fittings, accessories, manholes, etc.

D. Excavation Shoring Submittals: Working drawings and design calculations for OSHA approved shoring methods. The working drawings and design calculations shall be prepared, sealed, and signed by a Professional Engineer, licensed in the state of Connecticut. The furnishing of such plans shall not serve to relieve the Contractor of

any part of his responsibility for the safety of the work or for the successful completion of the project.

E. Quality Assurance Submittals:

1. Installer Certificates.
2. Field quality control test reports.

F. Operation and Maintenance Data: For oil-water separators to include in the operation and maintenance manuals specified in Form 817 Article 1.20-1.08.14 subsection 2 and described in NOTICE TO CONTRACTOR – CLOSEOUT DOCUMENTS.

G. Warranty: Special warranties specified in Part 1.6, "WARRANTY."

1.4 QUALITY ASSURANCE:

A. The Oil-Water Separator Installer shall be a certified installer for the manufacturer of the oil-water separator to be installed.

B. UL Listing: The Oil-Water Separator shall comply with the construction requirements of UL 1316 and the performance testing requirements of UL 2215.

1.5 DELIVERY, STORAGE, AND HANDLING:

A. Lift oil-water separators by lifting lugs and with the proper equipment. Do not use chain or cables around oil-water separators at any time. Chock and tie-down oil-water separators in accordance with manufacturer's instructions until ready for installation. If oil-water separators have to be moved, set on smooth ground free of rocks and foreign objects, and rechock. Do not drop or roll oil-water separators. Do not allow oil-water separators to be impacted.

B. Store other material in a clean dry area protected from damage. Materials may be stored outside only with the written approval of the Engineer.

1.6 WARRANTY:

A. Refer to Form 817 Article 1.20-1.06.08 and NOTICE TO CONTRACTOR – CLOSEOUT DOCUMENTS for additional information.

B. Special Warranty: Manufacturer's standard form in which manufacturer agrees to repair or replace oil-water separators that fail in materials or workmanship within specified warranty period.

1. Oil-Water Separators:

a. Failures include, but are not limited to, the following when used for storage of fuel oil at temperatures not exceeding 150 deg F:

1) Structural failures including cracking, breakup, and collapse.
2) Corrosion failure including external and internal corrosion of tanks.

b. Warranty Period: 30 years from the issuance of the Certificate of Compliance.

PART 2 - PRODUCTS

2.1 PIPES, TUBES, AND FITTINGS:

A. Steel Pipe: Schedule 40, galvanized, conforming to ASTM A53 with zinc-coated malleable iron fittings conforming to ANSI B16.3.

B. PVC Pipe: Schedule 40, conforming to ASTM D1785 with flush, threaded joints.

C. FRP Pipe: Model No. Red Thread II as manufactured by NOV Fiber Glass Systems, or an approved equal.

D. Drainage Piping and Fittings as specified in CSI Division 30 Section 307000, "Sanitary/Drainage".

2.2 PIPING SPECIALTIES:

A. Flexible Connectors: Comply with UL 567.

1. Metallic Connectors:

a. Manufacturers: Subject to compliance with requirements, available manufacturers offering products that may be incorporated into the Work include, but are not limited to, the following:

1) Flexicraft Industries.
2) FLEX-ING, Inc.; Model Fireflex with 346 swivel.
3) Hose Master, Inc.

b. Listed and labeled for aboveground and underground applications by an NRTL acceptable to authorities having jurisdiction.
c. Stainless-steel bellows with woven, flexible, bronze or stainless-steel, wire-reinforcing protective jacket.
d. Minimum Operating Pressure: 150 psig.
e. End Connections: Socket, flanged, or threaded end to match connected piping.
f. Maximum Length: 30 inches.

g. Swivel end, 50-psig maximum operating pressure.

2.3 JOINING MATERIALS:

A. Per manufacturer requirements unless otherwise noted.

B. Bonding Adhesive for Fiberglass Piping: As recommended by fiberglass piping manufacturer.

2.4 FRP OIL-WATER SEPARATOR:

A. Basis-of-Design Product: Subject to compliance with requirements, double-wall, brine-filled FRP underground oil-water separators Model No. DWT (4')-1000 OWS ULCSI-10 as manufactured by Containment Solutions, Inc., or an approved equal:

B. The oil-water separators shall be designed and constructed in accordance with Stokes Law and shall meet the following:

1. Designed for gravity separation of free-floating oils from rainwater runoff or from secondary wash-down. The oil-water separators shall remove settable solids.

   a. Specific Gravity Range for Separation of Oil: 0.68-0.90.
   b. Maximum Continuous Inlet Concentration: 400 ppm.
   c. Maximum Continuous Flowrate: 100 gpm.
   d. Maximum Effluent Concentration: 10 ppm.
   e. Minimum Spill Capacity: 530 gallons.

2. Have stationary under and overflow baffles to force all oil-water mixtures through the coalescing plates. There shall be two (2) sand/sludge walls separated by polypropylene coalescing plated to create a cross-flow pattern to trap settable solids.
3. The effluent downcomer shall be positioned to prevent the discharge of free oil that has been separated from the carrier liquid.
4. Separator plates shall be removable for maintenance and inspection.

C. The oil-water separators shall be inspected and tested for leakage by the manufacturer prior to shipment from the factory. The oil-water separators shall be shipped as completely assembled vessel ready for installation. Inspection, installation, and testing procedures shall be recorded on the manufacturer's letterhead and submitted to the Engineer upon delivery.

D. The oil-water separator shall be fabricated with fiberglass-reinforced polyester resins; suitable for operation at atmospheric pressure; fabricated for the following loads:

1. External Hydrostatic Pressure: To withstand general buckling with safety factor of 5:1 if hole is fully flooded and 7-feet of overburden.

2. Surface Loads: AASHTO's "Specifications for Highway Bridges," H-20 axle loads of 32,000 lb.
3. Internal Loads on Primary and Secondary Tanks: Withstand 5-psi air pressure test with a 5:1 safety factor and an operating range of 1.5-psig pressure and 3-ounces of vacuum with backfill in place. Test prior to installation to test for leakage.

2.5 OIL-WATER SEPARATOR ACCESSORIES:

A. Tank Manholes: 22-inch by 29-inch minimum (oval); bolted, flanged, and gasketed, with extension collar; for access to inside of tank.

B. Threaded pipe connection fittings on top of tank for fill, supply, return, vent, sounding, and gaging, in locations and of sizes indicated. Include cast-iron plugs for shipping.

C. Striker Plates: Inside tank, on bottom below fill, vent, sounding, gage, and other tube openings.

D. Lifting Lugs: For handling and installation.

E. Secondary Containment Collars: 42-inch diameter fiberglass collar integrally attached to the tank top to provide watertight seal in locations as indicated.

F. Containment Sumps (Turbine Enclosure): 42-inch diameter fiberglass, with sump base, add-on extension pieces as required to provide access to the manway from grade, 40-inch sump top, lid, and gasket-seal joints. Include sump entry boots for pipe penetrations through sidewalls.

G. Sump Entry Boots: Two-part pipe fitting for field assembly and of size required to fit over pipe. Include gaskets shaped to fit sump sidewall, sleeves, seals, and clamps as required for liquid-tight pipe penetrations.

H. Deadman Anchor: Storage tank manufacturer’s standard pre-fabricated deadman anchor, sized and reinforced for specific tank installation.

I. Anchor Straps: Storage tank manufacturer's standard anchoring system, with straps, strap-insulating material, cables and turnbuckles, of strength at least one and one-half times maximum uplift force of empty tank without backfill in place. Furnish anchors to be attached to deadman anchors.

J. Tank Charts: Provide (3) copies. Mount 1 copy in a glass frame secured to the wall with 4 screws adjacent to the Tank Monitoring System, or as directed by the Engineer. Charts shall be calibrated to show tank capacity in gallons from feet and inches, graduated by eighths.

K. Gauge Stick: Wooden, manufacturer’s recommended length, treated after graduating to prevent swelling and damage from fuel. Gauge stick shall be graduated in feet, inches, and eighths.

2.6 OIL-WATER SEAPARATOR INSTALLATION MATERIALS:

A. Filter Mat: Geotextile woven or spun filter fabric, in 1 or more layers, for minimum total weight of 3 oz./sq. yd. Filter fabric shall be provided to prevent the migration of peastone gravel backfill into the native soil and to maintain the integrity and stability of the backfill materials, Model No. Typar 3401 as manufactured by Reemay, Inc., or an approved equal.

B. Peastone Gravel Backfill: Composed entirely of uncrushed stone-sized rounded particles conforming to Section M.01.01 of the Form 817, Grading No. 6, unless otherwise specified by the tank manufacturer for compliance with the tank warranty.

2.7 OIL-WATER SEPARTOR PIPING SPECIALTIES:

A. Tank Manway Assembly and Manhole for Inlet, Pump-Out, and In-Tank Probe Assemblies:

1. Manhole Frame and Cover: Composite frame with water-tight, fiberglass reinforced composite cover 36-inch diameter, Model No. FL90 as manufactured by Fiberlite, or an approved equal. Manhole frame and cover shall be black. Include one (1) lifting tool.

B. Tank Pump-Out Assembly:

1. Cap, Adapter, Suction Tube, and Slotted Pipe: 2-inch, per manufacturer's recommendations.

C. Vent Assembly:

1. Vent Cap: Open atmospheric type, corrosion-resistant, internal wire screen, designed to protect vent lines from water, debris, and insects, Model No. 23 as manufactured by OPW, or an approved equal.

D. Tank Monitoring Assemblies:

1. Probe Cap and Adaptor: Bronze, side-sealing adaptor, side sealing cap (tapped), wire grommet to secure cables, Model No. 62M as manufactured by OPW, or an approved equal.

E. Sniff Tube Assemblies:

1. Sniff Tubes: 4-inch inside diameter, Schedule 40 PVC, with flush threaded joints, Model No. 61SPVC as manufactured by OPW, or an approved equal. Sniff tubes shall be slotted 0.020-inch on center to within 2-feet of finished grade. Remaining pipe shall be solid. Wrap perforated portion of pipe with filter fabric as manufactured by Dupont Typar, or an approved equal.

2. Sniff tubes shall terminate in handholes, with Well Cap Kit Model No. 634TTM as manufactured by OPW, or an approved equal.
3. Sniff Tube Handholes: Watertight, cast iron cover with stainless steel bolts, steel skirt, 8-inch diameter, Model No. 104AOW as manufactured by OPW, or an approved equal.

F. Inlet and Outlet Assemblies:

1. Female coupling with Screw Plug: 6-inch, per manufacturer's recommendations.
2. Manhole Frames and Covers (Outlet): Composite frame with water-tight, fiberglass reinforced composite cover 18-inch diameter, with manufacturer's standard locking system, and rated for H-20 loading requirements, Model No. FL180 as manufactured by Fibrelite, or an approved equal. Include the following accessories: a 6-inch diameter identification plate labeled "OUTLET".

2.8 LABELING AND IDENTIFYING:

A. Detectable Warning Tape: Acid- and alkali-resistant, PE film warning tape manufactured for marking and identifying underground utilities, a minimum of 6 inches wide and 4 mils thick, continuously inscribed with a description of utility, with metallic core encased in a protective jacket for corrosion protection, detectable by metal detector when tape is buried up to 30 inches deep; colored yellow.

2.9 SOURCE QUALITY CONTROL:

A. Pressure test and inspect oil-water separators, after fabrication and before shipment, according to manufacturer's requirements and governing standards.

B. Affix standards organization's code stamp.

PART 3 - EXECUTION

3.1 EXCAVATION AND BACKFILL:

A. Refer to 817 Section 2.02, "Roadway Excavation, Formation of Embankment and Disposal of Surplus Material" and Section 2.05, "Trench Excavation" for excavating, trenching, and backfilling requirements.

B. Peastone Gravel Backfill: Peastone Gravel shall be clean, dry and free from ice and snow, and shall be installed in accordance with the tank manufacturer's recommendations and as indicated on the Plans.

1. Oil-water separators: Provide a minimum of 12-inches of peastone gravel bed for the oil-water separators. At start of backfilling, care must be taken to work

material completely beneath the bottom of the oil-water separators and underneath the end caps to provide adequate support. Backfill completely over the top of the oil-water separators, up to bottom of the concrete apron. Peastone gravel should be added and compacted in 12-inch lifts.

2. Piping: Piping in trenches shall have the minimum burial depth as indicated on the plans with a 6-inch bed of peastone gravel under and over the pipe, compacted to support the pipe installation.

C. Excavation, shoring, trenching, and backfilling for the complete oil-water separator systems is included in the Major Lump Sum Item (MLSI) for the Project. There will be no separate payment for excavation, trenching, and backfilling.

D. No backfilling over any underground piping or electrical connections may take place until the work is inspected by the Engineer and the authorities having jurisdiction. Failure to have work inspected will result in the Contractor uncovering work to allow for inspection.

3.2 OUTDOOR PIPING INSTALLATION:

A. Install underground piping buried at least 24 inches below finished grade.

B. Install drainage pipe as specified in CSI Division Division 30 Section 307000, "Sanitary/Drainage" or as indicated on the Plans.

C. Install vent pipe at a minimum slope of 2 percent (1/4 inch per foot) downward towards the oil-water separators unless otherwise noted.

D. Assemble and install entry boots for pipe penetrations through sump sidewalls for liquid-tight joints.

E. Install flexible connectors at shown on the Plans. Heat shrink-wrap flexible connectors with a minimum of 2-inches overlap on each end.

F. Install fittings for changes in direction in rigid pipe.

3.3 PIPING JOINT CONSTRUCTION:

A. Ream ends of pipes and tubes and remove burrs.

B. Remove scale, slag, dirt, and debris from inside and outside of pipe and fittings before assembly.

C. Threaded Joints: Thread pipe with tapered pipe threads according to ASME B1.20.1. Cut threads full and clean using sharp dies. Ream threaded pipe ends to remove burrs and restore full ID. Join pipe fittings and valves as follows:

1. Apply appropriate tape or thread compound to external pipe threads unless dry seal threading is specified.
2. Damaged Threads: Do not use pipe or pipe fittings with threads that are corroded or damaged. Do not use pipe sections that have cracked or open welds.

D. Fiberglass-Bonded Joints: Prepare pipe ends and fittings, apply adhesive, and join according to pipe manufacturer's written instructions.

E. Plastic, Nonpressure-Piping, Solvent-Cement Joints: Clean and dry joining surfaces. Join pipe and fittings according to the following:

1. Comply with ASTM F 402 for safe-handling practice of cleaners, primers, and solvent cements.
2. PVC Piping: Join according to ASTM D 2855 and ASTM D 2665 Appendixes.

3.4 OIL-WATER SEPARATOR INSTALLATION:

A. Excavate as described in Part 3.1 and as shown on the Plans. Allow for cast-in-place, concrete-ballast base plus peastone gravel between ballast base and tank. Extend excavation around perimeter of oil-water separator.

B. Install filter mat.

C. Place peastone gravel on top of concrete-ballast base.

D. Set oil-water separator on fill materials and install deadman anchor and hold-down straps.

1. Prior to setting oil-water separator, soap tank and pressurize primary and secondary tanks to a minimum of 3 psig and a maximum of 5 psig. Test for 1 hour. Do not install oil-water separator until the tank successfully passes this pressure test for leaks.

E. Each component of the oil-water separator system shall be installed as shown on the plans and in accordance with manufacturer recommendations. Additional installation requirements of the storage tank system are described in subsequent portions of this Section where applicable.

F. Connect piping.

G. Backfill excavation with peastone gravel in 12-inch lifts and tamp backfill lift to consolidate.

H. Install filter mat between top of backfill material and earth fill.

I. Install FRP oil-water separators with hold-down straps, manhole extensions, and manhole risers.

J. Pressure Testing of Oil-Water Separator and Piping: Refer to Part 3.6, “Field Quality Control.”

1. Underground piping shall not be backfilled until the piping has successfully passed the pressure test for leaks described in this Section.

3.5 LABELING AND IDENTIFYING:

A. Install detectable warning tape directly above drainage piping, 6 inches below subgrade under pavements and slabs. Terminate tracer wire in an accessible area, and identify as "tracer wire" for future use with plastic-laminate sign.

1. Piping: Over underground piping.
2. Oil-Water Separators: Over edges of each.

3.6 FIELD QUALITY CONTROL:

A. Perform tests and inspections:

1. Oil-Water Separators: Minimum hydrostatic or compressed-air test pressures for oil-water separators for Double-Wall Tanks. Soap tanks. Isolate drainage piping from the oil-water separators during testing. In-tank probes shall not be installed in the tanks during testing.

a. Inner Tanks: Minimum 3 psig and maximum 5 psig.
b. Interstitial Space: Minimum 3 psig and maximum 5 psig.
c. Maintain the test pressure for one hour.

2. Piping: Test for leaks and defects in piping.

a. Leave drainage and vent piping uncovered until it has been tested and approved. Expose work that was covered before it was tested.
b. Drainage Piping: Close openings in piping system and fill with water to point of overflow, but not less than 10-foot head of water. From 15 minutes before inspection starts to completion of inspection, water level must not drop. Inspect joints for leaks.
c. Isolate storage tanks if test pressure in piping will cause pressure in storage tanks to exceed 10 psig.

B. Piping and equipment will be considered defective if it does not pass tests and inspections. Defective piping and equipment shall be repaired or replaced, and then retested.

C. Prepare test and inspection reports.

3.7 PIPING SCHEDULE:

A. Oil-Water Separator piping shall be the following:

1. Pipe Risers: 4-inch Schedule 40 PVC pipe and fittings.
2. Vent Pipe and Fittings, Underground: 2-inch FRP and fittings.
3. Vent Pipe and Fittings, Aboveground: 2-inch galvanized steel pipe and pipe fittings.
4. Drainage Pipe and Fittings: as specified in CSI Division 30 Section 307000, "Sanitary/Drainage".

END OF SECTION 221325

SECTION 230517 - SLEEVES AND SLEEVE SEALS FOR HVAC PIPING

PART 1 - GENERAL

1.1 SUMMARY:

A. Section Includes:

1. Sleeves.
2. Sleeve-seal systems.
3. Grout.

1.2 ACTION SUBMITTALS:

A. Submit the following in accordance with Form 817 Article 1.20-1.05.02 and NOTICE TO CONTRACTOR – SUBMITTALS.

B. Product Data: For each type of product indicated.

PART 2 - PRODUCTS

2.1 SLEEVES:

A. Galvanized-Steel Wall Pipes: ASTM A 53/A 53M, Schedule 40, with plain ends and welded steel collar; zinc coated.

B. Galvanized-Steel-Pipe Sleeves: ASTM A 53/A 53M, Type E, Grade B, Schedule 40, zinc coated, with plain ends.

2.2 SLEEVE-SEAL SYSTEMS:

A. Manufacturers: Subject to compliance with requirements, available manufacturers offering products that may be incorporated into the Work include, but are not limited to, the following:

1. CALPICO, Inc.
2. Metraflex Company (The).

B. Description: Modular sealing-element unit, designed for field assembly, for filling annular space between piping and sleeve.

1. Sealing Elements: EPDM-rubber interlocking links shaped to fit surface of pipe. Include type and number required for pipe material and size of pipe.
2. Pressure Plates: Plastic.
3. Connecting Bolts and Nuts: Carbon steel, with corrosion-resistant coating, of length required to secure pressure plates to sealing elements.

2.3 GROUT:

A. Standard: ASTM C 1107/C 1107M, Grade B, post-hardening and volume-adjusting, dry, hydraulic-cement grout.

B. Characteristics: Nonshrink; recommended for interior and exterior applications.

C. Design Mix: 5000-psi, 28-day compressive strength.

D. Packaging: Premixed and factory packaged.

PART 3 - EXECUTION

3.1 SLEEVE INSTALLATION:

A. Install sleeves for piping passing through penetrations in walls.

1. Cut sleeves to length for mounting flush with both surfaces.
2. Using grout, seal the space outside of sleeves in walls.

B. For sleeves that will have sleeve-seal system installed, select sleeves of size large enough to provide minimum 1-inch annular clear space between service piping outer diameter and pipe sleeve inner diameter, or larger as required by sleeve seal manufacturer's instructions.

C. Install sleeves for pipes passing through interior partitions.

1. Cut sleeves to length for mounting flush with both surfaces.
2. Install sleeves that are large enough to provide 1/4-inch annular clear space between sleeve and pipe or pipe insulation.
3. Seal annular space between sleeve and piping or piping insulation; use joint sealants appropriate for size, depth, and location of joint.

3.2 SLEEVE-SEAL-SYSTEM INSTALLATION:

A. Install sleeve-seal systems in sleeves in exterior concrete walls at service piping entries into building.

B. Select type, size, and number of sealing elements required for piping material and size and for sleeve ID or hole size. Position piping in center of sleeve. Center piping in penetration, assemble sleeve-seal system components, and install in annular space between piping and sleeve. Tighten bolts against pressure plates that cause sealing elements to expand and make a watertight seal.

3.3 SLEEVE AND SLEEVE-SEAL SCHEDULE:

A. Use sleeves and sleeve seals for the following piping-penetration applications:

1. Exterior Concrete Walls above Grade:

a. Piping Smaller Than NPS 6: Galvanized-steel wall sleeves.

2. Interior Partitions:

a. Galvanized-steel-pipe sleeves.

END OF SECTION 230517

SECTION 230529 - HANGERS AND SUPPORTS FOR HVAC PIPING AND EQUIPMENT

PART 1 - GENERAL

1.1 SUMMARY:

A. Section Includes:

1. Steel pipe hangers and supports.

1.2 DEFINITIONS:

A. Terminology: As defined in MSS SP-90, “Guidelines on Terminology for Pipe Hangers and Supports,” Manufacturers Standardization Society of The Valve and Fittings Industry Inc.

1.3 PERFORMANCE REQUIREMENTS:

A. Structural Performance: Hangers and supports for HVAC piping and equipment shall withstand the effects of gravity loads and stresses within limits and under conditions indicated according to ASCE/SEI 7.

1.4 ACTION SUBMITTALS:

A. Submit the following in accordance with Form 817 Article 1.20-1.05.02 and NOTICE TO CONTRACTOR – SUBMITTALS.

B. Product Data: For each type of product indicated.

1.5 INFORMATIONAL SUBMITTALS:

A. Quality Assurance Submittals:

1. Welding certificates.

1.6 QUALITY ASSURANCE:

A. Structural Steel Welding Qualifications: Qualify procedures and personnel according to AWS D1.1/D1.1M, "Structural Welding Code - Steel."

PART 2 - PRODUCTS

2.1 STEEL PIPE HANGERS AND SUPPORTS:

A. Description: MSS SP-58, Types 1 through 58, factory-fabricated components.

B. Galvanized Metallic Coatings: Pregalvanized or hot dipped.

C. Hanger Rods: Continuous-thread rod, nuts, and washer made of carbon steel.

PART 3 - EXECUTION

3.1 HANGER AND SUPPORT INSTALLATION:

A. Steel Pipe-Hanger Installation: Comply with MSS SP-69 and MSS SP-89. Install hangers, supports, clamps, and attachments as required to properly support piping from the building structure.

B. Install hangers and supports complete with necessary attachments, inserts, bolts, rods, nuts, washers, and other accessories.

C. Install hangers and supports to allow controlled thermal and seismic movement of piping systems, to permit freedom of movement between pipe anchors, and to facilitate action of expansion joints, expansion loops, expansion bends, and similar units.

D. Install building attachments within concrete slabs or attach to structural steel. Install additional attachments at concentrated loads and at changes in direction of piping.

E. Load Distribution: Install hangers and supports so that piping live and dead loads and stresses from movement will not be transmitted to connected equipment.

F. Pipe Slopes: Install hangers and supports to provide indicated pipe slopes and to not exceed maximum pipe deflections allowed by ASME B31.9 for building services piping.

3.2 ADJUSTING:

A. Hanger Adjustments: Adjust hangers to distribute loads equally on attachments and to achieve indicated slope of pipe.

B. Trim excess length of continuous-thread hanger and support rods to 1-1/2 inches.

3.3 PAINTING:

A. Touchup: Clean and touchup painting of field welds, bolted connections, and abraded areas of shop paint on miscellaneous metal.

B. Galvanized Surfaces: Clean welds, bolted connections, and abraded areas and apply galvanizing-repair paint to comply with ASTM A 780.

3.4 HANGER AND SUPPORT SCHEDULE:

A. Specific hanger and support requirements are in CSI Sections specifying piping systems and equipment.

B. Comply with MSS SP-69 for pipe-hanger selections and applications that are not specified in piping system Sections.

C. Use hangers and supports with galvanized metallic coatings for piping and equipment that will not have field-applied finish.

D. Use carbon-steel pipe hangers and supports and attachments for general service applications.

E. Horizontal-Piping Hangers and Supports: Unless otherwise indicated and except as specified in piping system Sections, install the following types:

1. Adjustable, Steel Clevis Hangers (MSS Type 1): For suspension of noninsulated or insulated, stationary pipes NPS 1/2 to NPS 30.
2. Single-Pipe Rolls (MSS Type 41): For suspension of pipes NPS 1 to NPS 30, from two rods if longitudinal movement caused by expansion and contraction might occur.

F. Vertical-Piping Clamps: Unless otherwise indicated and except as specified in piping system Sections, install the following types:

1. Extension Pipe or Riser Clamps (MSS Type 8): For support of pipe risers NPS 3/4 to NPS 24.
2. Carbon- or Alloy-Steel Riser Clamps (MSS Type 42): For support of pipe risers NPS 3/4 to NPS 24 if longer ends are required for riser clamps.

G. Hanger-Rod Attachments: Unless otherwise indicated and except as specified in piping system Sections, install the following types:

1. Steel Turnbuckles (MSS Type 13): For adjustment up to 6 inches for heavy loads.
2. Steel Clevises (MSS Type 14): For 120 to 450 deg F piping installations.
3. Steel Weldless Eye Nuts (MSS Type 17): For 120 to 450 deg F piping installations.

H. Building Attachments: Unless otherwise indicated and except as specified in piping system Sections, install the following types:

1. Top-Beam C-Clamps (MSS Type 19): For use under roof installations with bar-joist construction, to attach to top flange of structural shape.
2. Center-Beam Clamps (MSS Type 21): For attaching to center of bottom flange of beams.
3. C-Clamps (MSS Type 23): For structural shapes.
4. Welded-Steel Brackets: For support of pipes from below or for suspending from above by using clip and rod. Use one of the following for indicated loads:

    a. Light (MSS Type 31): 750 lb.
    b. Medium (MSS Type 32): 1500 lb.
    c. Heavy (MSS Type 33): 3000 lb.

I. Spring Hangers and Supports: Unless otherwise indicated and except as specified in piping system Sections, install the following types:

1. Restraint-Control Devices (MSS Type 47): Where indicated to control piping movement.
2. Spring Cushions (MSS Type 48): For light loads if vertical movement does not exceed 1-1/4 inches.
3. Spring-Cushion Roll Hangers (MSS Type 49): For equipping Type 41, roll hanger with springs.
4. Spring Sway Braces (MSS Type 50): To retard sway, shock, vibration, or thermal expansion in piping systems.
5. Variable-Spring Hangers (MSS Type 51): Preset to indicated load and limit variability factor to 25 percent to allow expansion and contraction of piping system from hanger.

END OF SECTION 230529

SECTION 230533 - HEAT TRACING FOR HVAC PIPING

1.1 SUMMARY:

A. Section includes heat tracing for HVAC piping with the following electric heating cables:

1. Self-regulating, parallel resistance.

1.2 ACTION SUBMITTALS:

A. Submit the following in accordance with Form 817 Article 1.20-1.05.02 and NOTICE TO CONTRACTOR – SUBMITTALS.

B. Product Data: For each type of product.

1. Include rated capacities, operating characteristics, and furnished specialties and accessories.
2. Schedule heating capacity, length of cable, spacing, and electrical power requirement for each electric heating cable required.

C. Shop Drawings: For electric heating cable.

1. Include plans, elevations, sections, and attachment details.
2. Include diagrams for power, signal, and control wiring.

1.3 INFORMATIONAL SUBMITTALS:

A. Quality Assurance Submittals:

1. Field quality-control reports.

1.4 CLOSEOUT SUBMITTALS:

A. Operation and Maintenance Data: For electric heating cables to include in operation and maintenance manuals specified in Form 817 Article 1.20-1.08.14 subsection 2 and described in NOTICE TO CONTRACTOR – CLOSEOUT DOCUMENTS.

PART 2 - PRODUCTS

2.1 SELF-REGULATING, PARALLEL-RESISTANCE HEATING CABLES:

A. Manufacturers: Subject to compliance with requirements, manufacturers offering products that may be incorporated into the Work include, but are not limited to, the following

1. BriskHeat.
2. Chromalox, Inc.
3. Delta-Therm Corporation.
4. Easy Heat.
5. Pyrotenax; Tyco Thermal Controls.
6. Raychem; Tyco Thermal Controls.
7. Thermon Americas Inc.
8. Trasor Corp.

B. Comply with IEEE 515.1.

C. Heating Element: Pair of parallel No. 18 AWG, tinned, stranded copper bus wires embedded in crosslinked conductive polymer core, which varies heat output in response to temperature along its length. Terminate with waterproof, factory-assembled, nonheating leads with connectors at one end, and seal the opposite end watertight. Cable shall be capable of crossing over itself once without overheating.

D. Electrical Insulating Jacket: Flame-retardant polyolefin.

E. Cable Cover: Tinned-copper braid and polyolefin outer jacket with ultraviolet inhibitor.

F. Maximum Operating Temperature (Power On): 150 deg F.

G. Maximum Exposure Temperature (Power Off): 185 deg F.

H. Electrical Components, Devices, and Accessories: Listed and labeled as defined in NFPA 70, by a qualified testing agency, and marked for intended location and application.

I. Capacities and Characteristics:

1. Maximum Heat Output: 5 W/ft.
2. Piping Diameter: 3/4-inch.
3. Number of Parallel Cables: 1.
4. Spiral Wrap Pitch: 12 inches.
5. Electrical Characteristics for Single-Circuit Connection:

a. Volts: 120.
b. Phase: Single.

c. Hertz: 60.

2.2 CONTROLS:

A. Remote bulb unit with adjustable temperature range from 30 to 50 deg F.

B. Snap action; open-on-rise, single-pole switch with minimum current rating adequate for connected cable.

C. Remote bulb on capillary, resistance temperature device, or thermistor for directly sensing pipe-wall temperature.

D. Corrosion-resistant, waterproof control enclosure.

2.3 ACCESSORIES:

A. Cable Installation Accessories: Fiberglass tape, heat-conductive putty, cable ties, silicone end seals and splice kits, and installation clips all furnished by manufacturer, or as recommended in writing by manufacturer.

B. Warning Tape: Continuously printed "Electrical Tracing"; vinyl, at least 3 mils thick, and with pressure-sensitive, permanent, waterproof, self-adhesive back.

1. Width for Markers on Pipes with OD, Including Insulation, Less Than 6 Inches: 3/4 inch minimum.

PART 3 - EXECUTION

3.1 EXAMINATION:

A. Examine surfaces and substrates to receive electric heating cables for compliance with requirements for installation tolerances and other conditions affecting performance.

1. Ensure surfaces and pipes in contact with electric heating cables are free of burrs and sharp protrusions.

B. Proceed with installation only after unsatisfactory conditions have been corrected.

3.2 INSTALLATION:

A. Install electric heating cables after piping has been tested and before insulation is installed.

B. Install electric heating cables according to IEEE 515.1.

C. Install insulation over piping with electric cables according to Section 230719 "HVAC Piping Insulation."

D. Install warning tape on piping insulation where piping is equipped with electric heating cables.

E. Set field-adjustable switches and circuit-breaker trip ranges.

3.3 CONNECTIONS:

A. Ground equipment according to CSI Division 26 Section 260526 "Grounding and Bonding for Electrical Systems."

B. Connect wiring according to CSI Division 26 Section 260519 "Low-Voltage Electrical Power Conductors and Cables."

3.4 FIELD QUALITY CONTROL:

A. Perform the following tests and inspections:

1. Perform tests after cable installation but before application of coverings such as insulation, wall or ceiling construction, or concrete.
2. Test cables for electrical continuity and insulation integrity before energizing.
3. Test cables to verify rating and power input. Energize and measure voltage and current simultaneously.

B. Repeat tests for continuity, insulation resistance, and input power after applying thermal insulation on pipe-mounted cables.

C. Cables will be considered defective if they do not pass tests and inspections.

D. Prepare test and inspection reports.

3.5 PROTECTION:

A. Protect installed heating cables, including nonheating leads, from damage during construction.

B. Remove and replace damaged heat-tracing cables.

END OF SECTION 230533

SECTION 230553 - IDENTIFICATION FOR HVAC PIPING AND EQUIPMENT

PART 1 - GENERAL

1.1 SUMMARY:

A. Section Includes:

1. Pipe labels.
2. Valve tags.

1.2 ACTION SUBMITTALS:

A. Submit the following in accordance with Form 817 Article 1.20-1.05.02 and NOTICE TO CONTRACTOR – SUBMITTALS.

B. Product Data: For each type of product indicated.

1.3 QUALITY ASSURANCE:

A. ASME Compliance: Comply with ASME 13.1 “Scheme for the Identification of Piping Systems” for letter size, length of color field, colors, and viewing angles of identification devices for piping.

1.4 COORDINATION:

A. Coordinate installation of identifying devices with completion of covering and painting of surfaces where devices are to be applied.

PART 2 - PRODUCTS

2.1 PIPE LABELS:

A. General Requirements for Manufactured Pipe Labels: Preprinted, color-coded, with lettering indicating service, and showing flow direction.

B. Pretensioned Pipe Labels: Precoiled, semirigid plastic formed to cover full circumference of pipe and to attach to pipe without fasteners or adhesive.

C. Self-Adhesive Pipe Labels: Printed plastic with contact-type, permanent-adhesive backing.

D. Pipe Label Contents: Include identification of piping service using same designations or abbreviations as used on Drawings, pipe size, and an arrow indicating flow direction.

1. Flow-Direction Arrows: Integral with piping system service lettering to accommodate both directions, or as separate unit on each pipe label to indicate flow direction.
2. Lettering Size: At least 1-1/2 inches high.

2.2 VALVE TAGS:

A. Valve Tags: Stamped or engraved with 1/4-inch letters for piping system abbreviation and 1/2-inch numbers.

1. Tag Material: Brass, 0.032-inch minimum thickness, and having predrilled or stamped holes for attachment hardware.
2. Fasteners: Brass wire-link or beaded chain; or S-hook.

PART 3 - EXECUTION

3.1 PREPARATION:

A. Clean piping and equipment surfaces of substances that could impair bond of identification devices, including dirt, oil, grease, release agents, and incompatible primers, paints, and encapsulants.

3.2 PIPE LABEL INSTALLATION:

A. Locate pipe labels where piping is exposed or above accessible ceilings in finished spaces; machine rooms; accessible maintenance spaces such as shafts, tunnels, and plenums; and exterior exposed locations as follows:

1. Near each valve and control device.
2. Near each branch connection, excluding short takeoffs for fixtures and terminal units. Where flow pattern is not obvious, mark each pipe at branch.
3. Near penetrations through walls, floors, ceilings, and inaccessible enclosures.
4. Near major equipment items and other points of origination and termination.
5. Spaced at maximum intervals of 50 feet along each run. Reduce intervals to 25 feet in areas of congested piping and equipment.

B. Pipe Label Color Schedule: In accordance with ASME A13.1.

3.3 VALVE-TAG INSTALLATION:

A. Install tags on valves and control devices in piping systems as directed by the Engineer, except check valves; valves within factory-fabricated equipment units; shutoff valves; faucets; convenience and lawn-watering hose connections; and HVAC terminal devices and similar roughing-in connections of end-use fixtures and units. List tagged valves in a valve schedule.

B. Valve-Tag Application Schedule: Tag valves according to size, shape, and color scheme and with captions similar to those indicated in the following subparagraphs:

1. Valve-Tag Size and Shape: 2 inches, round.
2. Valve-Tag Color: Natural.
3. Letter Color: Black.

END OF SECTION 230553

SECTION 230719 - HVAC PIPING INSULATION

PART 1 - GENERAL

1.1 SUMMARY

A. Section includes insulating the following HVAC piping systems:

1. Heated fuel-oil piping, outdoors.

1.2 ACTION SUBMITTALS:

A. Submit the following in accordance with Form 817 Article 1.20-1.05.02 and NOTICE TO CONTRACTOR – SUBMITTALS.

B. Product Data: For each type of product indicated. Include thermal conductivity, water-vapor permeance thickness, and jackets (both factory and field applied if any).

1.3 INFORMATIONAL SUBMITTALS:

A. Quality Assurance Submittals:

1. Manufacturer Certification Letter in accordance with NOTICE TO CONTRACTOR – POTENTIAL FOR ASBESTOS CONTAINING MATERIALS.
2. Material Test Reports: From a qualified testing agency acceptable to authorities having jurisdiction indicating, interpreting, and certifying test results for compliance of insulation materials, sealers, attachments, cements, and jackets, with requirements indicated. Include dates of tests and test methods employed.

1.4 QUALITY ASSURANCE:

A. Surface-Burning Characteristics: For insulation and related materials, as determined by testing identical products according to ASTM E 84, by a testing and inspecting agency acceptable to authorities having jurisdiction. Factory label insulation and jacket materials and adhesive, mastic, tapes, and cement material containers, with appropriate markings of applicable testing agency.

1. Insulation Installed Outdoors: Flame-spread index of 75 or less, and smoke-developed index of 150 or less.

1.5 COORDINATION:

A. Coordinate sizes and locations of supports, hangers, and insulation shields specified in CSI Division 23 Section 230529, "Hangers and Supports for HVAC Piping and Equipment."

B. Coordinate clearance requirements with piping Installer for piping insulation application.

C. Coordinate installation and testing of heat tracing.

PART 2 - PRODUCTS

2.1 INSULATION MATERIALS:

A. Comply with requirements in Part 3 for where insulating materials shall be applied.

B. Products shall not contain asbestos, lead, mercury, or mercury compounds.

C. Foam insulation materials shall not use CFC or HCFC blowing agents in the manufacturing process.

D. Cellular Glass: Inorganic, incombustible, foamed or cellulated glass with annealed, rigid, hermetically sealed cells. Factory-applied jacket requirements are specified in Part 2.5 "Factory-Applied Jackets."

1. Products: Subject to compliance with requirements, available products that may be incorporated into the Work include, but are not limited to, the following:

a. Pittsburgh Corning Corporation; Foamglas.

2. Block Insulation: ASTM C 552, Type I.
3. Special-Shaped Insulation: ASTM C 552, Type III.
4. Preformed Pipe Insulation without Jacket: Comply with ASTM C 552, Type II, Class 1.
5. Preformed Pipe Insulation with Factory-Applied ASJ-SSL: Comply with ASTM C 552, Type II, Class 2.
6. Factory fabricate shapes according to ASTM C 450 and ASTM C 585.

E. Mineral-Fiber, Preformed Pipe Insulation:

1. Products: Subject to compliance with requirements, available products that may be incorporated into the Work include, but are not limited to, the following:

a. Johns Manville; Micro-Lok.
b. Knauf Insulation; 1000-Degree Pipe Insulation.
c. Manson Insulation Inc.; Alley-K.

d. Owens Corning; Fiberglas Pipe Insulation.

2. Type I, 850 deg F Materials: Mineral or glass fibers bonded with a thermosetting resin. Comply with ASTM C 547, Type I, Grade A, with factory-applied ASJ-SSL. Factory-applied jacket requirements are specified in Part 2.5 "Factory-Applied Jackets."

2.2 ADHESIVES:

A. Materials shall be compatible with insulation materials, jackets, and substrates and for bonding insulation to itself and to surfaces to be insulated unless otherwise indicated.

B. Cellular-Glass Adhesive: Two-component, thermosetting urethane adhesive containing no flammable solvents, with a service temperature range of minus 100 to plus 200 deg F.

1. Products: Subject to compliance with requirements, available products that may be incorporated into the Work include, but are not limited to, the following:

a. Foster Brand, Specialty Construction Brands, Inc., a business of H. B. Fuller Company; 81-84.

C. Mineral-Fiber Adhesive: Comply with MIL-A-3316C, Class 2, Grade A.

1. Products: Subject to compliance with requirements, available products that may be incorporated into the Work include, but are not limited to, the following:

a. Childers Brand, Specialty Construction Brands, Inc., a business of H. B. Fuller Company; CP-127.
b. Eagle Bridges - Marathon Industries; 225.
c. Foster Brand, Specialty Construction Brands, Inc., a business of H. B. Fuller Company; 85-60/85-70.
d. Mon-Eco Industries, Inc.; 22-25.

D. ASJ Adhesive: Comply with MIL-A-3316C, Class 2, Grade A for bonding insulation jacket lap seams and joints.

1. Products: Subject to compliance with requirements, available products that may be incorporated into the Work include, but are not limited to, the following:

a. Childers Brand, Specialty Construction Brands, Inc., a business of H. B. Fuller Company; CP-82.
b. Eagle Bridges - Marathon Industries; 225.
c. Foster Brand, Specialty Construction Brands, Inc., a business of H. B. Fuller Company; 85-20.
d. Mon-Eco Industries, Inc.; 22-25.

E. PVC Jacket Adhesive: Compatible with PVC jacket.

1. Products: Subject to compliance with requirements, available products that may be incorporated into the Work include, but are not limited to, the following:

a. Dow Corning Corporation; 739, Dow Silicone.
b. Johns Manville; Zeston Perma-Weld, CEEL-TITE Solvent Welding Adhesive.
c. P.I.C. Plastics, Inc.; Welding Adhesive.
d. Speedline Corporation; Polyco VP Adhesive.

2.3 MASTICS:

A. Materials shall be compatible with insulation materials, jackets, and substrates; comply with MIL-PRF-19565C, Type II.

B. Vapor-Barrier Mastic: Solvent based; suitable for outdoor use on below-ambient services.

1. Products: Subject to compliance with requirements, available products that may be incorporated into the Work include, but are not limited to, the following:

a. Childers Brand, Specialty Construction Brands, Inc., a business of H. B. Fuller Company.
b. Foster Brand, Specialty Construction Brands, Inc., a business of H. B. Fuller Company.

2. Water-Vapor Permeance: ASTM F 1249, 0.05 perm at 30-mil dry film thickness.
3. Service Temperature Range: Minus 50 to plus 220 deg F.
4. Solids Content: ASTM D 1644, 33 percent by volume and 46 percent by weight.
5. Color: White.

2.4 SEALANTS:

A. Joint Sealants:

1. Materials shall be compatible with insulation materials, jackets, and substrates.
2. Permanently flexible, elastomeric sealant.
3. Service Temperature Range: Minus 100 to plus 300 deg F.
4. Color: White or gray.

B. Cellular-Glass Joint Sealants:

1. Products: Subject to compliance with requirements, available products that may be incorporated into the Work include, but are not limited to, the following:

a. Childers Brand, Specialty Construction Brands, Inc., a business of H. B. Fuller Company.
b. Foster Brand, Specialty Construction Brands, Inc., a business of H. B. Fuller Company.
c. Pittsburgh Corning Corporation.

C. ASJ Flashing Sealants and PVC Jacket Flashing Sealants:

1. Products: Subject to compliance with requirements, available products that may be incorporated into the Work include, but are not limited to, the following:

a. Childers Brand, Specialty Construction Brands, Inc., a business of H. B. Fuller Company; CP-76.

2. Materials shall be compatible with insulation materials, jackets, and substrates.
3. Fire- and water-resistant, flexible, elastomeric sealant.
4. Service Temperature Range: Minus 40 to plus 250 deg F.
5. Color: White.

2.5 FACTORY-APPLIED JACKETS:

A. Insulation system schedules indicate factory-applied jackets on various applications. When factory-applied jackets are indicated, comply with the following:

1. ASJ-SSL: ASJ with self-sealing, pressure-sensitive, acrylic-based adhesive covered by a removable protective strip; complying with ASTM C 1136, Type I.

2.6 FIELD-APPLIED JACKETS:

A. Field-applied jackets shall comply with ASTM C 921, Type I, unless otherwise indicated.

B. PVC Jacket: High-impact-resistant, UV-resistant PVC complying with ASTM D 1784, Class 16354-C; thickness as scheduled; roll stock ready for shop or field cutting and forming. Thickness is indicated in field-applied jacket schedules.

1. Products: Subject to compliance with requirements, available products that may be incorporated into the Work include, but are not limited to, the following:

a. Johns Manville; Zeston.
b. P.I.C. Plastics, Inc.; FG Series.
c. Proto Corporation; LoSmoke.
d. Speedline Corporation; SmokeSafe.

2. Adhesive: As recommended by jacket material manufacturer.
3. Color: White.

4. Factory-fabricated fitting covers to match jacket if available; otherwise, field fabricate.

    a. Shapes: 45- and 90-degree, short- and long-radius elbows, tees, valves, flanges, unions, reducers, end caps, soil-pipe hubs, traps, mechanical joints, and P-trap and supply covers for lavatories.

2.7 TAPES:

A. ASJ Tape: White vapor-retarder tape matching factory-applied jacket with acrylic adhesive, complying with ASTM C 1136.

1. Products: Subject to compliance with requirements, available products that may be incorporated into the Work include, but are not limited to, the following:

    a. ABI, Ideal Tape Division; 428 AWF ASJ.
    b. Avery Dennison Corporation, Specialty Tapes Division; Fasson 0836.
    c. Compac Corporation; 104 and 105.
    d. Venture Tape; 1540 CW Plus, 1542 CW Plus, and 1542 CW Plus/SQ.

2. Width: 3 inches.
3. Thickness: 11.5 mils.
4. Adhesion: 90 ounces force/inch in width.
5. Elongation: 2 percent.
6. Tensile Strength: 40 lbf/inch in width.
7. ASJ Tape Disks and Squares: Precut disks or squares of ASJ tape.

B. PVC Tape: White vapor-retarder tape matching field-applied PVC jacket with acrylic adhesive; suitable for indoor and outdoor applications.

1. Products: Subject to compliance with requirements, available products that may be incorporated into the Work include, but are not limited to, the following:

    a. ABI, Ideal Tape Division; 370 White PVC tape.
    b. Compac Corporation; 130.
    c. Venture Tape; 1506 CW NS.

2. Width: 2 inches.
3. Thickness: 6 mils.
4. Adhesion: 64 ounces force/inch in width.
5. Elongation: 500 percent.
6. Tensile Strength: 18 lbf/inch in width.

2.8 SECUREMENTS:

A. Bands:

1. Products: Subject to compliance with requirements, available products that may be incorporated into the Work include, but are not limited to, the following:

    a. ITW Insulation Systems; Gerrard Strapping and Seals.
    b. RPR Products, Inc.; Insul-Mate Strapping and Seals.

2. Stainless Steel: ASTM A 167 or ASTM A 240/A 240M, Type 304 or Type 316; 0.015 inch thick, 1/2 inch wide with wing seal.
3. Aluminum: ASTM B 209, Alloy 3003, 3005, 3105, or 5005; Temper H-14, 0.020 inch thick, 1/2 inch wide with wing seal.

B. Staples: Outward-clinching insulation staples, nominal 3/4-inch wide, stainless steel or Monel.

C. Wire: 0.062-inch soft-annealed, stainless steel.

1. Products: Subject to compliance with requirements, available products that may be incorporated into the Work include, but are not limited to, the following:

    a. C & F Wire.

PART 3 - EXECUTION

3.1 EXAMINATION:

A. Examine substrates and conditions for compliance with requirements for installation tolerances and other conditions affecting performance of insulation application.

1. Verify that systems to be insulated have been tested and are free of defects.
2. Verify that surfaces to be insulated are clean and dry.
3. Proceed with installation only after unsatisfactory conditions have been corrected.

3.2 PREPARATION:

A. Surface Preparation: Clean and dry surfaces to receive insulation. Remove materials that will adversely affect insulation application.

B. Coordinate insulation installation with the trade installing heat tracing. Comply with requirements for heat tracing that apply to insulation.

3.3 GENERAL INSTALLATION REQUIREMENTS:

A. Install insulation materials, accessories, and finishes with smooth, straight, and even surfaces; free of voids throughout the length of piping including fittings, valves, and specialties.

B. Install insulation materials, forms, vapor barriers or retarders, jackets, and thicknesses required for each item of pipe system as specified in insulation system schedules.

C. Install accessories compatible with insulation materials and suitable for the service. Install accessories that do not corrode, soften, or otherwise attack insulation or jacket in either wet or dry state.

D. Install insulation with longitudinal seams at top and bottom of horizontal runs.

E. Install multiple layers of insulation with longitudinal and end seams staggered.

F. Do not weld brackets, clips, or other attachment devices to piping, fittings, and specialties.

G. Keep insulation materials dry during application and finishing.

H. Install insulation with tight longitudinal seams and end joints. Bond seams and joints with adhesive recommended by insulation material manufacturer.

I. Install insulation with least number of joints practical.

J. Where vapor barrier is indicated, seal joints, seams, and penetrations in insulation at hangers, supports, anchors, and other projections with vapor-barrier mastic.

1. Install insulation continuously through hangers and around anchor attachments.
2. For insulation application where vapor barriers are indicated, extend insulation on anchor legs from point of attachment to supported item to point of attachment to structure. Taper and seal ends at attachment to structure with vapor-barrier mastic.
3. Install insert materials and install insulation to tightly join the insert. Seal insulation to insulation inserts with adhesive or sealing compound recommended by insulation material manufacturer.
4. Cover inserts with jacket material matching adjacent pipe insulation. Install shields over jacket, arranged to protect jacket from tear or puncture by hanger, support, and shield.

K. Apply adhesives, mastics, and sealants at manufacturer's recommended coverage rate and wet and dry film thicknesses.

L. Install insulation with factory-applied jackets as follows:

1. Draw jacket tight and smooth.
2. Cover circumferential joints with 3-inch wide strips, of same material as insulation jacket. Secure strips with adhesive and outward clinching staples along both edges of strip, spaced 4 inches o.c.
3. Overlap jacket longitudinal seams at least 1-1/2 inches. Install insulation with longitudinal seams at bottom of pipe. Clean and dry surface to receive self-sealing lap. Staple laps with outward clinching staples along edge at 4 inches o.c.

a. For below-ambient services, apply vapor-barrier mastic over staples.

4. Cover joints and seams with tape, according to insulation material manufacturer's written instructions, to maintain vapor seal.
5. Where vapor barriers are indicated, apply vapor-barrier mastic on seams and joints and at ends adjacent to pipe flanges and fittings.

M. Cut insulation in a manner to avoid compressing insulation more than 75 percent of its nominal thickness.

N. Finish installation with systems at operating conditions. Repair joint separations and cracking due to thermal movement.

O. Repair damaged insulation facings by applying same facing material over damaged areas. Extend patches at least 4 inches beyond damaged areas. Adhere, staple, and seal patches similar to butt joints.

3.4 GENERAL PIPE INSULATION INSTALLATION:

A. Requirements in this article generally apply to all insulation materials except where more specific requirements are specified in various pipe insulation material installation articles.

B. Insulation Installation on Fittings:

1. Install insulation over fittings and other specialties with continuous thermal and vapor-retarder integrity unless otherwise indicated.
2. Insulate pipe elbows using preformed fitting insulation or mitered fittings made from same material and density as adjacent pipe insulation. Each piece shall be butted tightly against adjoining piece and bonded with adhesive.
3. For services not specified to receive a field-applied jacket except for flexible elastomeric and polyolefin, install fitted PVC cover over elbows, tees, strainers, valves, flanges, and unions. Terminate ends with PVC end caps. Tape PVC covers to adjoining insulation facing using PVC tape.

3.5 INSTALLATION OF CELLULAR-GLASS INSULATION:

A. Insulation Installation on Straight Pipes and Tubes:

1. Secure each layer of insulation to pipe with wire or bands and tighten bands without deforming insulation materials.
2. Where vapor barriers are indicated, seal longitudinal seams, end joints, and protrusions with vapor-barrier mastic and joint sealant.
3. For insulation with factory-applied jackets on above-ambient services, secure laps with outward-clinched staples at 6 inches o.c.

4. For insulation with factory-applied jackets on below-ambient services, do not staple longitudinal tabs. Instead, secure tabs with additional adhesive as recommended by insulation material manufacturer and seal with vapor-barrier mastic and flashing sealant.

B. Insulation Installation on Pipe Fittings and Elbows:

1. Install preformed sections of same material as straight segments of pipe insulation when available. Secure according to manufacturer's written instructions.
2. When preformed sections of insulation are not available, install mitered sections of cellular-glass insulation. Secure insulation materials with wire or bands.

3.6 INSTALLATION OF MINERAL-FIBER INSULATION:

A. Insulation Installation on Straight Pipes and Tubes:

1. Secure each layer of preformed pipe insulation to pipe with wire or bands and tighten bands without deforming insulation materials.
2. Where vapor barriers are indicated, seal longitudinal seams, end joints, and protrusions with vapor-barrier mastic and joint sealant.
3. For insulation with factory-applied jackets on above-ambient surfaces, secure laps with outward-clinched staples at 6 inches o.c.
4. For insulation with factory-applied jackets on below-ambient surfaces, do not staple longitudinal tabs. Instead, secure tabs with additional adhesive as recommended by insulation material manufacturer and seal with vapor-barrier mastic and flashing sealant.

B. Insulation Installation on Pipe Fittings and Elbows:

1. Install preformed sections of same material as straight segments of pipe insulation when available.
2. When preformed insulation elbows and fittings are not available, install mitered sections of pipe insulation, to a thickness equal to adjoining pipe insulation. Secure insulation materials with wire or bands.

3.7 FIELD-APPLIED JACKET INSTALLATION:

A. Where PVC jackets are indicated, install with 1-inch overlap at longitudinal seams and end joints; for horizontal applications. Seal with manufacturer's recommended adhesive.

1. Apply two continuous beads of adhesive to seams and joints, one bead under lap and the finish bead along seam and joint edge.

3.8 PIPING INSULATION SCHEDULE, GENERAL:

A. Acceptable preformed pipe and tubular insulation materials and thicknesses are identified for each piping system and pipe size range. If more than one material is listed for a piping system, selection from materials listed is Contractor's option.

3.9 OUTDOOR, ABOVEGROUND PIPING INSULATION SCHEDULE:

A. Fuel Oil Piping, Heated:

1. All Pipe Sizes: Insulation shall be one of the following:

a. Cellular Glass: 2 inches thick.
b. Mineral-Fiber, Preformed Pipe Insulation, Type I: 2 inches thick.

3.10 OUTDOOR, FIELD-APPLIED JACKET SCHEDULE:

A. Install jacket over insulation material. For insulation with factory-applied jacket, install the field-applied jacket over the factory-applied jacket.

B. If more than one material is listed, selection from materials listed is Contractor's option.

C. Piping, Exposed:

1. PVC: 30 mils thick.

END OF SECTION 230719

SECTION 231113 - FACILITY FUEL-OIL PIPING

PART 1 - GENERAL

1.1 SUMMARY:

A. Section Includes:

1. Fuel-oil storage and distribution system.

B. Related CSI Sections include the following:

1. Division 13 Section 132180, "Tank Monitoring System" for aboveground storage tank monitoring system.

1.2 DEFINITIONS:

A. AST: Aboveground storage tank.

1.3 PERFORMANCE REQUIREMENTS:

A. Maximum Operating-Pressure Ratings: 3-psig fuel-oil supply pressure at oil-fired appliances.

1.4 ACTION SUBMITTALS:

A. Submit the following in accordance with Form 817 Article 1.20-1.05.02 and NOTICE TO CONTRACTOR – SUBMITTALS.

B. Product Data: For each type of product indicated. Include construction details, material descriptions, and dimensions of individual components and profiles. Also include, where applicable, rated capacities, operating characteristics, electrical characteristics, and furnished specialties and accessories.

1. Spare Parts: Include name, address, and telephone number of in-state supplier of spare parts. No out-of-state suppliers shall be permitted.

C. Shop Drawings: For AST’s include details of supports and anchors. Indicate all critical dimensions, locations of all fittings, connections, and accessories.

1.5 INFORMATIONAL SUBMITTALS:

A. Quality Assurance Submittals:

1. Field quality-control reports.

1.6 CLOSEOUT SUBMITTALS:

A. Operation and Maintenance Data: For fuel-oil equipment and accessories to include in the operation, and maintenance manuals specified in Form 817 Article 1.20-1.08.14 subsection 2 and described in NOTICE TO CONTRACTOR – CLOSEOUT DOCUMENTS.

B. Warranty: Special warranties are specified in Part 1.10 “Warranty.”

1.7 QUALITY ASSURANCE:

A. Electrical Components, Devices, and Accessories: Listed and labeled as defined in NFPA 70, by a qualified testing agency, and marked for intended location and application.

B. Comply with ASME B31.9, "Building Services Piping," for fuel-oil piping materials, installation, testing, and inspecting.

C. Comply with requirements of the EPA and of state and local authorities having jurisdiction. Include recording of fuel-oil storage tanks and monitoring of tanks and piping.

1.8 DELIVERY, STORAGE, AND HANDLING:

A. Lift tanks in accordance with manufacturer’s instructions and with the proper equipment. Do not use chain or cables around tanks at any time. If tanks have to be moved, set on smooth ground free of rocks and foreign objects. Do not drop or roll tanks. Do not allow tanks to be impacted.

B. Lift and support waste-oil AST’s only at designated lifting or supporting points, as shown on Shop Drawings. Do not move or lift tanks unless empty.

C. Other Tank Materials: Store material in a clean dry area protected from damage. Materials may be stored outside only with the written approval of the Engineer.

D. Deliver pipes and tubes with factory-applied end caps. Maintain end caps through shipping, storage, and handling to prevent pipe end damage and to prevent entrance of dirt, debris, and moisture.

1.9 COORDINATION:

A. Coordinate sizes and locations of concrete bases with actual equipment provided.

B. A charge of $6,300 shall be included in the contract bid price for the filling of the Fuel-Oil AST to 90% of the rated capacity with No. 2 Fuel-Oil, or as otherwise directed by the Engineer.

C. All bidders will include the above amount in Item No. 1600002A – Fuel Adjustment Cost along with costs for other fuels.

1.10 WARRANTY:

A. Refer to Form 817 Article 1.20-1.06.08 and NOTICE TO CONTRACTOR – CLOSEOUT DOCUMENTS for additional information.

B. Special Warranty: Manufacturer's standard form in which manufacturer agrees to repair or replace storage tanks that fail in materials or workmanship within specified warranty period.

1. Storage Tanks:

a. Failures include, but are not limited to, the following when used for storage of fuel-oil and waste-oil at temperatures not exceeding 150 deg F:

1) Structural failures including cracking, breakup, and collapse.
2) Corrosion failure including external and internal corrosion of steel tanks.

b. Warranty Period for fuel-oil AST: 30 years from the issuance of the Certificate of Compliance.

PART 2 - PRODUCTS

2.1 PIPES, TUBES, AND FITTINGS:

A. See Part 3 piping schedule for where pipes, tubes, fittings, and joining materials are applied in various services.

B. Steel Pipe:

1. ASTM A 53/A 53M, black steel, Schedule 40, Type E or S, Grade B.

a. Malleable-Iron Threaded Fittings: ASME B16.3, Class 150, standard pattern.
b. Unions: ASME B16.39, Class 150, malleable iron with brass-to-iron seat, ground joint, and threaded ends.

2. ASTM A 53/A 53M, galvanized steel, Schedule 40.

a. Malleable-Iron Threaded Fittings: Zinc-coated, ASME B16.3, Class 150, standard pattern.

2.2 PIPING SPECIALTIES:

A. Manual Air Vents:

1. Body: Bronze.
2. Internal Parts: Nonferrous.
3. Operator: Screwdriver or thumbscrew.
4. Inlet Connection: NPS 1/2.
5. Discharge Connection: NPS 1/8.
6. CWP Rating: 150 psig.
7. Maximum Operating Temperature: 225 deg F.

B. Oil Filters: Size based upon burner rate.

1. Filter housing shall be Model No. 2A-700 as manufactured by General Filters, Inc., or an approved equal.
2. Filter cartridge Model No. 2A-710 as manufactured by General Filters, Inc., or an approved equal.

C. Basket Strainers:

1. Body: ASTM A 126, Class B, high-tensile cast iron with bolted cover and bottom drain connection.
2. End Connections: Threaded ends for NPS 2 and smaller.
3. Strainer Screen: 60 or 80-mesh startup strainer, and perforated stainless-steel basket with 50 percent free area.
4. CWP Rating: 125 psig.

2.3 JOINING MATERIALS:

A. Joint Compound and Tape: Suitable for fuel-oil.

2.4 MANUAL FUEL-OIL SHUTOFF VALVES:

A. See valve schedule in Part 3 for where each valve type is applied in various services.

B. General Requirements for Metallic Valves, NPS 2 and Smaller for Liquid Service: Comply with UL 842.

1. CWP Rating: 125 psig.
2. Threaded Ends: Comply with ASME B1.20.1.
3. Dryseal Threads on Flare Ends: Comply with ASME B1.20.3.
4. Tamperproof Feature: Locking feature for valves indicated in the valve schedule.

5. Service Mark: Initials "WOG" shall be permanently marked on valve body.

C. Two-Piece, Full-Port, Bronze Ball Valves with Bronze Trim: MSS SP-110.

1. Manufacturers: Subject to compliance with requirements, available manufacturers offering products that may be incorporated into the Work include, but are not limited to, the following:

   a. BrassCraft Manufacturing Company; a Masco company.
   b. Conbraco Industries, Inc.; Apollo Div.
   c. Lyall, R. W. & Company, Inc.
   d. McDonald, A. Y. Mfg. Co.
   e. Perfection Corporation; A Subsidiary of American Meter Company.

2. Body: Bronze, complying with ASTM B 584.
3. Ball: Chrome-plated bronze.
4. Stem: Bronze; blowout proof.
5. Seats: Reinforced TFE; blowout proof.
6. Packing: Threaded-body packnut design with adjustable-stem packing.
7. Ends: Threaded, flared, or socket as indicated in the valve schedule.
8. CWP Rating: 600 psig.
9. Service Mark: Initials "WOG" shall be permanently marked on valve body.

2.5 SPECIALTY VALVES:

A. Oil Safety Valves: Comply with UL 842.

1. Manufacturers: Subject to compliance with requirements, available manufacturers offering products that may be incorporated into the Work include, but are not limited to, the following:

   a. Anderson Greenwood; Division of Tyco Flow Control.
   b. Suntec Industries Incorporated.
   c. Webster Fuel Pumps & Valves; a division of Capital City Tool, Inc.

2. Listed and labeled for fuel-oil service by an NRTL acceptable to authorities having jurisdiction.
3. Body: Brass, bronze, or cast steel.
4. Springs: Stainless steel.
5. Seat and Diaphragm: Nitrile rubber.
6. Orifice: Stainless steel, interchangeable.
7. Factory-Applied Finish: Baked enamel.
8. Manual override port.
9. Maximum Inlet Pressure: 60 psig.
10. Maximum Outlet Pressure: 3 psig.

B. Emergency Shutoff Valves: Comply with UL 842.

1. Manufacturers: Subject to compliance with requirements, available manufacturers offering products that may be incorporated into the Work include, but are not limited to, the following:

    a. Highfield Manufacturing.

2. Listed and labeled for fuel-oil service by an NRTL acceptable to authorities having jurisdiction.
3. Body: ASTM A 126, cast iron.
4. Fusible link to close valve at 165 deg F.
5. Thermal relief to vent line pressure buildup due to fire.
6. Air test port.
7. Maximum Operating Pressure: 0.5 psig.

2.6 PROTECTED, STEEL, FUEL-OIL AST:

A. Description: UL 142 and UL 2085; thermally insulated, fire-resistant and protected, double-wall, horizontal, steel tank; with primary- and secondary-containment walls and insulation and with interstitial space.

B. Construction: Concrete-Vaulted or Insulated Double-Wall.

1. Concrete-Vaulted: Fabricated with welded, carbon steel and insulation and encased in concrete; suitable for operation at atmospheric pressure and for storing motor fuel.

    a. The tank shall consist of a primary steel tank covered by a minimum of ¼” thick extruded polystyrene foam insulation panels. The secondary containment shall consist of a 30 mil thick high-density polyethylene membrane enclosing the steel tank and insulation material. The primary steel tank and the secondary containment shall be encased in six inches of monolithic reinforced concrete, with minimum design strength of 5,000 psi at 28 days.
    b. The concrete design shall include the following for long-term durability: air entrainment, water reducing admixture, and steel reinforcement. Concrete encasements with seams will not be approved. The protected and insulated tank systems shall contain no cold joints or heat sinks (heat transfer points). No steel or insulating material shall come in contact with the concrete or other corrosive material.

2. Insulated Double-Wall: Fabricated with welded, carbon steel and insulation; suitable for operation at atmospheric pressure and for storing motor fuel.

    a. The tank shall consist of an inner steel tank, encased by lightweight thermal insulation material, and an outer steel wall. The outer steel wall shall be capable of providing a minimum 110% containment of the primary storage tank’s content.

b. Steel outer wall of the tank shall be coated to prolong weather resistance and to further reduce maintenance needs. All external surfaces including the tank shall receive a commercial grit blast, epoxy primer coat, and finish coatings.

c. The tank's interstitial space shall include a porous, lightweight monolithic thermal insulation material. The thermal insulation material shall not be exposed to weathering, shall be protected by the steel secondary containment outer wall, and shall allow liquid to migrate through the interstice to the monitoring point.

C. Protection: The AST's shall be suitable for operation at atmospheric pressure; fabricated to meet the following criteria:

1. Provide two (2) hour fire protection in accordance with UL 2085.
2. Vehicle Impact Resistance: Tanks shall be designed to have a low center of gravity that can withstand vehicle impact and tipping during earthquakes and other natural disasters.
3. Ballistic Resistance: Tanks shall withstand bullet resistance tests in compliance with UL 2085.
4. Lightning Protection: The protected and insulated AST systems shall have two (2) bolts for connecting grounding conductors for lightning protection. Grounding conductor and grounding rod materials and installation shall be in accordance with NFPA 780.

D. The primary steel tanks shall include an atmospheric vent and emergency venting in accordance with NFPA 30 Code requirements.

E. Support legs shall be monolithically cast with the concrete vault or welded to outer tank as a complete UL-listed unit.

2.7 FUEL-OIL AST ACCESSORIES:

A. Threaded pipe connection nipples on top of tank, for fill, supply, vent, in-tank probe, and gaging in locations and of sizes indicated on the Plans.

B. 24" Manway Assembly for access to inside the tank with 8" Emergency Vent. The emergency vent relief system shall relieve the pressure of the primary tank if the tank pressure exceeds ½ psig.

C. Tank Fill Assembly: 7-gallon coated, UL listed spill containment. The assembly shall include a normally closed drain valve to release spilled product into the primary tank and a stick port for manual gauging.

D. Tank Charts: Provide (3) copies. Mount 1 copy in a glass frame secured to the wall with 4 screws adjacent to the tank monitoring system, or as directed by the Engineer. Charts shall be calibrated to show tank capacity in gallons from feet and inches, graduated by eighths.

E. Gauge Stick: Wooden, manufacturer's recommended length, treated after graduating to prevent swelling and damage from fuel. Gauge stick shall be graduated in feet, inches, and eighths.

F. Stair Assembly: Tank manufacturer's standard galvanized steel stairway for access to the top of the tank. Stairs and railings shall comply with OSHA Standards.

G. Emergency Response Identification: Hazard sign that meets the requirements of NFPA 704. Hazard rating numerals shall be a minimum of 3 inches high. Sign shall be vinyl or aluminum.

H. Tank Sign: Provide cast methyl methacrylate monomer plastic sheet, in sizes and thickness indicated:

1. Engraved Copy: Engrave copy characters through the first background layer to expose the contrasting color of the inner core of the engraving stock.

    a. Panel Size: 18"x20", long side horizontal.
    b. Engraving Stock Thickness: 1/8-inch minimum.
    c. Engraved Letter proportion: Letters and Numbers on signs shall have a width-to-height ratio between 3:5 and 1:1 and a stroke-width-to-height ratio between 1:5 and 1:10.
    d. Engraved Letter Size: Characters shall be 5/8 inch high.
    e. Background or first layer of engraving stock: Black
    f. Inner core of engraving stock: White
    g. Engraved letter style: Helvetica Medium with all upper case letters.
2. Sign shall be permanently anchored to the facility in the Mechanical Room, unless otherwise directed by the Engineer. Anchor sign with stainless steel fasteners.
3. Sign shall include the following information:

FUEL-OIL TANK INSTALLATION INFORMATION

CTDOT PROJECT NO. 73-190

WARRANTY START DATE: (X/X/XX)

TANK TYPE AND CAPACITY: (Type of tank installed),
(i.e. Concrete vaulted, steel, 2000 gallon)

WARRANTY: (Manufacturer's name and type of warranty)

INSTALLER: (Contractor's name, town located, and telephone number)

MANUFACTURER: (Manufacturer's name and telephone number of warranty service)

2.8 TANK INSTALLATION MATERIALS:

A. Grout: Non-shrink type.

B. Granular Fill: Refer to Form 817, Section 2.13 “Granular Fill” for material and construction methods required.

C. Concrete Pads: Comply with the requirements in CSI Division 03 Section 033000 “Cast-in-Place Concrete.”

2.9 FUEL-OIL STORAGE TANK SPECIALTIES:

A. Supply and Return Tubes: Extension of supply and return piping into tank, terminating 6 inches above tank bottom and cut at a 45-degree angle (1:1 slope).

B. Quad Tapped Bushing and Adaptor: For connection of supply and return piping to tank nipple.

C. Overfill Prevention:

1. Overfill Prevention Valve: Suitable for installation in aboveground fuel-oil storage tanks, provide Model No. 61fSTOP-200M as manufactured by OPW, or an approved equal which will stop the flow of liquid into the tank when product level reaches 95% of tank capacity.
2. Lower Drop Tube: Aluminum, compatible with overfill prevention valve, as manufactured by OPW, or an approved equal. Drop tube shall terminate 6-inches above the bottom of the tank, with the end of drop tube cut off at a 45-degree angle.

D. Fill Adaptor and Cap: 2-inch Tank Inlet Spout Adaptor Model No. 633AST with 2-inch locking dust cap, Model No. 634BK as manufactured by OPW, or an approved equal.

E. Antisiphon Valves: Poppet-type, bronze or corrosion-resistant metal components, built-in thermal expansion pressure relief valve, and adjustable to meet field conditions of hydrostatic head pressure.

F. Vent Cap: Open, atmospheric type, corrosion-resistant, internal wire screen designed to protect vent lines from water, debris, and insects, Model No. 23 as manufactured by OPW, or an approved equal.

G. Probe Cap and Adaptor: Bronze, side-sealing adaptor, side sealing cap (tapped), wire grommet to secure cables, Model No. 62M as manufactured by OPW, or an approved equal.

H. Stick Port Cap: Test well lockable cap and adaptor, 2” NPT.

2.10 FUEL-OIL:

A. Fuel-Oil: ASTM D 396, Grade No. 2.

2.11 SOURCE QUALITY CONTROL:

A. Pressure test and inspect storage tanks, after fabrication and before shipment, according to ASME and the following:

1. Horizontal, Concrete-Vaulted and Insulated, Steel Fuel-oil AST's: UL 142 and UL 2085.

B. Affix standards organization's code stamp.

PART 3 - EXECUTION

3.1 EXAMINATION:

A. Examine roughing-in for fuel-oil piping system to verify actual locations of piping connections before equipment installation.

B. Proceed with installation only after unsatisfactory conditions have been corrected.

3.2 EXCAVATION AND BACKFILL:

A. Refer to 817 Section 2.02, "Roadway Excavation, Formation of Embankment and Disposal of Surplus Material" and Section 2.05, "Trench Excavation" for excavating, trenching, and backfilling requirements.

B. Granular Fill shall be installed in accordance with Form 817 Article 2.13 beneath the concrete pads as indicated on the plans. Protect buried items during compaction.

1. Concrete Pads: Provide a minimum of 6-inches of granular fill for concrete pads, compacted to support the concrete pad installation.

3.3 PREPARATION:

A. Close equipment shutoff valves before turning off fuel-oil to premises or piping section.

B. Comply with NFPA 30 and NFPA 31 requirements for prevention of accidental ignition.

3.4 OUTDOOR PIPING INSTALLATION:

A. Install metal pipes and tubes, fittings, valves, and specialties at piping connections to AST.

B. Install fittings for changes in direction in rigid pipe.

C. Install system components with pressure rating equal to or greater than system operating pressure.

3.5 INDOOR PIPING INSTALLATION:

A. Plans indicate general location and arrangement of piping systems. Indicated locations and arrangements were used to size pipe and calculate friction loss, expansion, and other design considerations. Install piping as indicated unless deviations to layout are approved by the Designer.

B. Arrange for pipe spaces and sleeves, and openings in building structure during progress of construction, to allow for mechanical installations.

C. Install piping in concealed locations unless otherwise indicated and except in equipment rooms and service areas.

D. Install piping in equipment rooms and service areas at right angles or parallel to building walls. Diagonal runs are prohibited unless specifically indicated otherwise.

E. Install piping free of sags and bends.

F. Install fittings for changes in direction.

G. Verify final equipment locations for roughing-in.

H. Prohibited Locations:

1. Do not install fuel-oil piping in or through circulating air ducts, chimneys or gas vents (flues), or ventilating ducts.
2. Do not install fuel-oil piping in solid walls or partitions.

I. Use eccentric reducer fittings to make reductions in pipe sizes. Install fittings with level side down.

J. Connect branch piping from top or side of horizontal piping.

K. Install unions in pipes NPS 2 and smaller at final connection to each piece of equipment and elsewhere as indicated.

1. Unions shall be dielectric fittings with ferrous and brass or bronze end connections, separated by insulating material, where piping of dissimilar metals is joined.

L. Do not use fuel-oil piping as grounding electrode.

M. Install basket strainer on inlet side of fuel oil pumps, and oil filter on inlet side of oil burner connections.

N. Install sleeves and sleeve seals for piping penetrations of concrete walls. Comply with requirements for sleeves and sleeve seals specified in CSI Division 23 Section 230517 "Sleeves and Sleeve Seals for HVAC Piping."

3.6 VALVE INSTALLATION:

A. Install manual fuel-oil shutoff valves on connections to fuel-oil appliance.

B. Install valves in accessible locations.

C. Protect valves from physical damage.

D. Install oil safety valves at inlet of each oil-fired appliance.

E. Install manual air vents at high points in fuel-oil piping.

F. Install emergency shutoff valves at entrance of fuel-oil piping to building.

3.7 PIPING JOINT CONSTRUCTION:

A. Ream ends of pipes and tubes and remove burrs.

B. Remove scale, slag, dirt, and debris from inside and outside of pipe and fittings before assembly.

C. Threaded Joints: Thread pipe with tapered pipe threads according to ASME B1.20.1. Cut threads full and clean using sharp dies. Ream threaded pipe ends to remove burrs and restore full ID. Join pipe fittings and valves as follows:

1. Apply appropriate tape or thread compound to external pipe threads unless dry seal threading is specified.
2. Damaged Threads: Do not use pipe or pipe fittings with threads that are corroded or damaged. Do not use pipe sections that have cracked or open welds.

3.8 FUEL-OIL AST INSTALLATION:

A. Excavate as described herein and as shown on the Plans.

B. Set tank on concrete pad and anchor in accordance with manufacturer's instructions.

C. Each component of the storage tank system shall be installed as shown on the Plans and in accordance with manufacturer recommendations. Additional installation requirements of the storage tank system are described in subsequent portions of this Section where applicable.

D. Connect piping.

E. Pressure Testing of Tank and Piping: Refer to Part 3.13 "Field Quality Control."

F. Supplying Fuel:

1. Refer to Part 1.9 "Coordination" for filling tanks. Supply appropriate fuel in accordance with specifications set forth in the most current State of Connecticut, Department of Administrative Services contract award for:

- 0035-048 - Fuel No. 1, 2 and 4

2. To determine product suitability for application into State equipment, Contractor will be responsible for testing sample from tanker at time of delivery. Written results of testing will be provided within 7 days to the Engineer. Contracts with corresponding detailed specifications can be obtained by accessing the State of Connecticut, Department of Administrative Services' website at http://das.ct.gov/Purchase/Commodity.htm.
3. Prior to the issuance of the Certificate of Compliance, the Contractor shall fill all fuel-oil tanks in accordance with the Contract requirements.
4. The Contractor shall provide to the Engineer 3 calendar days notice of its intent to fill tanks. Filling of tanks shall be witnessed by a representative of the Department.

G. Adjust antisiphon valve to meet hydrostatic head pressure conditions.

H. Apply Hazard Sign directly to tank in a visible location. Hazard ratings for the Fuel-Oil Tank shall be the following:

1. Health (Blue): 0
2. Fire (Red): 2
3. Reactivity (Yellow): 0
4. Special Hazard (White): None

3.9 HANGER AND SUPPORT INSTALLATION:

A. Pipe hanger and support and equipment support materials and installation requirements are specified in CSI Division 23 Section 230529 "Hangers and Supports for HVAC Piping and Equipment."

B. Install hangers for horizontal steel piping with the following maximum spacing and minimum rod sizes:

1. NPS 3/4 and Smaller: Maximum span, 60 inches; minimum rod size, 3/8 inch.

C. Support vertical steel pipe at each floor and at spacing not greater than 15 feet.

3.10 CONNECTIONS:

A. Install piping adjacent to equipment to allow service and maintenance.

B. Install unions, in piping NPS 2 and smaller, adjacent to each valve and at final connection to each piece of equipment having threaded pipe connection.

C. Connect piping to equipment with ball valve and union. Install union between valve and equipment.

3.11 LABELING AND IDENTIFYING:

A. Pipe identification is specified in CSI Division 23 Section 230553 "Identification for HVAC Piping and Equipment."

3.12 PAINTING:

A. Paint exposed, exterior metal piping and piping specialties, except components with factory-applied paint or protective coating.

1. Alkyd System: MPI EXT 5.1D.

a. Prime Coat: Alkyd anticorrosive metal primer.
b. Intermediate Coat: Exterior alkyd enamel matching topcoat.
c. Topcoat: Exterior alkyd enamel
d. Color: Gray

B. Paint exposed, interior metal piping, valves, and piping specialties, except components, with factory-applied paint or protective coating.

1. Alkyd System: MPI INT 5.1E.

a. Prime Coat: Quick-drying alkyd metal primer.
b. Intermediate Coat: Latex, interior, matching topcoat.
c. Topcoat: Latex, interior.
d. Color: Gray.

C. Damage and Touchup: Repair marred and damaged factory-applied finishes with materials and by procedures to match original factory finish.

3.13 FIELD QUALITY CONTROL:

A. Perform Tests and Inspections:

1. Tanks: Minimum compressed-air test pressures for storage tanks: Isolate product piping from the tanks during testing. In-tank probes shall not be installed in the tanks during testing. Maintain the test pressure for one hour.

   a. Primary Tanks: Minimum 3 psig and maximum 5 psig.

2. Day Tanks: Minimum hydrostatic or compressed-air test pressures for fuel-oil storage tanks. Soap tanks. Isolate product piping from the tanks during testing. In-tank probes shall not be installed in the tanks during testing.

   a. Double-Wall Tanks:

      1) Inner Tanks: Minimum 3 psig and maximum 5 psig.
      2) Interstitial Space: Minimum 3 psig and maximum 5 psig.

   b. Maintain the test pressure for one hour.

3. Piping: Minimum pneumatic test-pressures measured at highest point in system Soap pipe fittings.

   a. Fuel-Oil Piping: Minimum 5 psig for minimum 2 hours.
   b. Isolate storage tanks if test pressure in piping will cause pressure in storage tanks to exceed 10 psig.

4. Inspect and test fuel-oil piping according to NFPA 31, "Tests of Piping" Paragraph; and according to requirements of authorities having jurisdiction.
5. Start fuel-oil day tank supply pumps to verify for proper operation and check for leaks.
6. Test and adjust controls and safeties. Replace damaged and malfunctioning controls and equipment.
7. Bleed air from fuel-oil piping using manual air vents.
8. Existing Boiler Burner: Perform startup checks according to manufacturer's written instructions.

B. Fuel-oil piping and equipment will be considered defective if it does not pass tests and inspections. Defective piping and equipment shall be repaired or replaced, and then retested.

C. Prepare test and inspection reports.

3.14 CONCRETE PADS:

A. Concrete installation requirements are specified in CSI Division 03 Section 033000, “Cast-in-Place Concrete.”

B. Concrete Bases: Anchor fuel oil day tank to concrete base according to equipment manufacturer's written instructions and according to seismic codes at Project.

1. Construct concrete bases 6-inches thick, not less than 4 inches larger in both directions than supported unit.

3.15 OUTDOOR PIPING SCHEDULE:

A. Fuel-oil piping shall be the following:

1. Black steel pipe, steel or malleable-iron threaded fittings, and threaded joints.

B. Vent Piping: Galvanized steel pipe, threaded fittings, and threaded joints.

3.16 INDOOR PIPING SCHEDULE:

A. Fuel-oil piping shall be the following:

1. Black steel pipe, steel or malleable-iron threaded fittings, and threaded joints.

3.17 ABOVEGROUND MANUAL FUEL-OIL SHUTOFF VALVE SCHEDULE:

A. Distribution and branch piping valves shall be two-piece, full-port, bronze ball valves with bronze trim.

END OF SECTION 231113

SECTION 260519 – LOW-VOLTAGE ELECTRICAL POWER CONDUCTORS AND CABLES

PART 1 - GENERAL

1.1 SUMMARY:

A. This Section includes building wires and cables and associated connectors, splices, and terminations for wiring systems rated 600 V and less.

B. This Section also includes communication conductors.

C. Related CSI Sections: The following sections contain requirements that relate to this Section:

1. Division 26 Section 260533 “Raceways and Boxes for Electrical Systems”.
2. Division 26 Section 260543 “Underground Ducts and Raceways for Electrical Systems”.

1.2 SUBMITTALS:

A. Submit the following in accordance with Form 817 Article 1.20 – 1.05.02 and NOTICE TO CONTRACTOR – SUBMITTALS.

B. Product Data: For the following products:

1. 600 volt insulated wires and cables, all sizes
2. Communication conductors
3. All terminals, lugs and wire connectors

C. Quality Assurance Submittals

1. Manufacturer Certification Letter in accordance with NOTICE TO CONTRACTOR – POTENTIAL FOR ASBESTOS CONTAINING MATERIALS.

1.3 QUALITY ASSURANCE:

A. Testing Agency Qualifications: Testing shall be performed by an independent testing agency as defined by OSHA in 29 CFR 1910.7 or a member company of the NETA and that is acceptable to authorities having jurisdiction.

1. Testing Agency's Field Supervisor: Person currently certified by the NETA or the NICET to supervise on-site testing specified in Part 3.

B. Electrical Components, Devices, and Accessories: Listed and labeled as defined in NFPA 70, Article 100, by a testing agency acceptable to authorities having jurisdiction, and marked for intended use.

C. Comply with NFPA 70.

1.4 DELIVERY, STORAGE, AND HANDLING:

A. Deliver wires and cables according to NEMA WC 26.

1.5 COORDINATION:

A. Coordinate layout and installation of cables with other installations.

B. Revise locations and elevations from those indicated, as required to suit field conditions and as approved by Engineer.

PART 2 - PRODUCTS

2.1 MANUFACTURERS:

A. Available Manufacturers: Subject to compliance with requirements, manufacturers offering products that may be incorporated into the Work include, but are not limited to, the following:

1. Wires and Cables:

a. Alcan Aluminum Corporation; Alcan Cable Div.
b. American Insulated Wire Corp.; Leviton Manufacturing Co.
c. Southwire Company
d. Carol Cable Co., Inc.
e. Belden

2. Multi taps and connectors for wires and cables:

a. Hubbell Power Systems, Inc.
b. 3M; Electrical Products Division
c. Grainger
d. Square D Co.; Anderson.

2.2 BUILDING WIRES AND CABLES:

A. UL-listed building wires and cables with conductor material, insulation type, cable construction, and rating as specified in Part 3.2 "Wire and Insulation Applications".

B. Rubber Insulation Material: Comply with NEMA WC 3.

C. Thermoplastic Insulation Material: Comply with NEMA WC 5.

D. Conductor Material: Copper.

E. Stranding: All wires shall be stranded.

F. General:

1. The Contract Plans show the locations, type, size and number of wires and cables to be used for this Contract. Each type shall comply with the Specifications contained herein.
2. Cables which have been manufactured more than two years prior to installation will not be accepted.
3. The conductors, unless otherwise noted, shall be soft or annealed copper conforming to ANSI/ASTM B 33 if coated, ANSI/ASTM B 3 if uncoated. In addition, unless otherwise specified, stranded conductors shall have concentric stranding as per ANSI/ASTM B 8.
4. Cables shall be supplied with both ends of each length sealed against the entry of moisture.

G. 600 Volt Insulated Wires and Cables:

1. General:

a. Power, instrumentation, grounding, and control cable shall be approved for use in wet or dry locations, indoors or outdoors in raceway, wireways, trenches, conduits, underground ducts.
b. Asbestos, in any form, is prohibited from the cable. This prohibition includes such items as fillers and binding tapes even though the item is encapsulated, or the asbestos fibers are impregnated with binder material.
c. All conductors shall be copper, insulated, 600 Volt, unless otherwise noted. Wire size No.8 and smaller shall be type THHN-THWN, unless otherwise noted or shown; wire size No. 6 AWG and larger shall be type THWN or XHHW.
d. Conductors with higher insulation temperature rating shall be provided as required. Conductors shall be rated and of a type approved for the specific application.
e. All conductors shall be installed in raceways Refer to CSI Division 26 Section 260533 "Raceways and Boxes for Electrical Systems" and CSI

Division 26 Section 260543 "Underground Ducts and Raceways for Electrical Systems."

f. Conductor and conduit sizes shown on the drawings are based on copper conductors with Type THHN-THWN or XHHW insulation, unless otherwise noted. Increase conductor and conduit sizes as necessary for other approved insulation types.

g. Aluminum is not approved for conductors or wire.

h. Power conductors shall be a minimum of No. 12 AWG stranded unless otherwise noted. All wire shall be stranded unless otherwise noted. Control conductors shall be a minimum of No. 14 AWG stranded, unless otherwise noted.

i. When the distance from the panel to the first outlet on a 20 Amp 120 Volt circuit exceeds 100 feet and on a 20 Amp 240 Volt circuit exceeds 200 feet, the conductor shall be increased to No. 10 AWG.

j. Wires, conductors, and cables shall be single conductor, except as otherwise specified or indicated on drawings.

k. Cable meeting special requirements such as twisted pairs, triads, or individual shielding shall be provided where recommended by the system manufacturer.

l. Conductor insulation shall be color coded.

208/120 Volt		240/120 Volt	
Phase A	Black	Phase A	Black
Phase B	Red	Phase B	Red
Phase C	Blue		
Neutral	White	Neutral	White
Ground	Green	Ground	Green

m. Switch leg wiring shall be of the same color code as the corresponding phase.

n. System color coding shall be in accordance with color code furnished by system manufacturer and shown on wiring diagrams.

o. Colors, except colors for conductors No. 4 AWG and larger, shall be factory applied the entire length of the conductors by solid color compound, solid color coating, or colored striping or bands, 2 sets 180° apart. Onsite coloring shall not be done, except color coding by means of paint or tapes is approved only for conductors No. 4 AWG and larger.

p. Voltage rating, manufacturer, type and conductor AWG size indication shall be continuous, factory applied the entire length of each conductor.

q. Joints and splices shall be made in a manner equivalent electrically and mechanically to the conductor itself. Connections shall be of the pressure or compression type.

r. All lugs terminating feeder conductors shall be of the solderless type UL listed for use with copper wire. All lugs and terminals shall be UL listed for 90°C application.

s. Branch circuit connections or joints shall have an approved type solderless connector suitable for copper conductors.

t. Wire connectors shall consist of a phenolic compound body with a cone-shaped coil spring insert and threaded skirt. Outer shell shall be knurled for each grip and capable of use with a wrench or pliers.

H. Telephone Cable:

1. General:

a. Cabling between Tank Monitoring System and Fuel Master Unit (FMU); Cabling shall be installed in conduit. The cable shall be as follows:

1) Homerun shall be with no splices. Cable shall be shielded twisted pair cable, 4-conductor, #24 AWG, or per the manufacturer's recommendation.

b. Cabling between the patch panel and the emergency telephone located on the exterior of the building. The cable shall be as follows:

1) Cable shall be yellow. Homerun shall be with no splices. Cable shall be shielded twisted pair cable, Category 6.

c. All cabling shall be in full compliance with EIA/TIA-568B Commercial Building Telecommunications Standard and EIA/TIA-569B Commercial Building Standard for Telecommunications Pathways and Spaces.

d. Size of conductors and number of pairs shall be as shown on the Contract Plans and shall be per the system manufacturer's requirements if there is any conflict.

I. Network Cable

1. General:

a. Cabling between Fuel Master Unit and Data Panel; Cabling shall be installed in conduit. The cable shall be as follows:

1) Homerun shall be with no splices. Cable shall be shielded twisted pair cable, Category 6. The cable shall be suited for underground installation.

2) Spare cable shall be suited for underground installation.

b. Cabling between the Tank Monitoring System and the Data Panel: Cabling shall be installed in conduit. The cable shall be as follows:

1) Cable shall be yellow in color. Homerun shall be with no splices. Cable shall be twisted pair cable, Category 6.

c. All cabling shall be in full compliance with EIA/TIA-568B Commercial Building Telecommunications Standard and EIA/TIA-569B Commercial Building Standard for Telecommunications Pathways and Spaces.

d. Size of conductors and number of pairs shall be as shown on the Contract Plans and shall be per the system manufacturer's requirements if there is any conflict.

2.3 CONNECTORS AND SPLICES:

A. UL-listed, factory-fabricated wiring connectors of size, ampacity rating, material, type, and class for application and service indicated. Comply with Project's installation requirements and as specified in Part 3.2 "Wire and Insulation Applications".

PART 3 - EXECUTION

3.1 EXAMINATION:

A. Examine raceways and building finishes receiving wires and cables for compliance with requirements for installation tolerances and other conditions affecting performance of wires and cables. Do not proceed with installation until unsatisfactory conditions have been corrected.

3.2 WIRE AND INSULATION APPLICATIONS:

A. Service Entrance: Type RHW or THWN, in raceway.

B. Feeders: Type THHN/THWN, in raceway.

C. Branch Circuits: Type THHN/THWN, in raceway.

D. Fire Alarm Circuits: Power-limited, fire-protective, signaling circuit cable.

E. Class 1 Control Circuits: Type THHN/THWN, in raceway.

F. Class 2 Control Circuits: Power-limited cable, concealed in building finishes.

3.3 INSTALLATION:

A. All conductors shall be installed in metal raceways, RGSC, EMT, PVC, and FMC in accordance with the NEC except where specifically noted otherwise.

B. Terminals shall be arranged phase A-B or 1-2 from left to right, top to bottom, and front to back.

C. Branch circuit phase wires shall be connected to separate phases of supply mains to assure balanced condition in that circuit and proper load balance on the panel. Circuit numbers assigned on drawings are used for convenience and need not necessarily designate the circuit on the panel to which that circuit may be connected. Actual circuiting shall suit job conditions.

D. Equipment requiring electric service is also named on the drawings or schedules of other disciplines, or in other Sections. Where receptacles or convenience outlets are specified to serve named equipment, the Contractor shall provide approved receptacle, plug, connection, and conduit to equipment.

E. Drawings do not necessarily indicate the required number of conductors in each raceway. Unless it is specifically noted that raceways are empty by the word "spare", the Contractor shall provide all required conductors, power, control, supervisory, alarm, or branch circuits. The Contractor shall make all final connections, flexible or fixed, as required, to all equipment requiring final electrical connections.

F. Regardless of the number of conductors shown, each circuit (conductors No. 8 and smaller) to panels or equipment shall contain a full size neutral conductor, which, if not utilized, shall be taped and insulated at the final point of connection to equipment.

G. All grounding conductors shall have green color coded insulation and shall be sized in accordance with the NEC.

H. Install wires and cables as indicated, according to manufacturer's written instructions and NECA's "Standard of Installation."

I. Pull Conductors: Use manufacturer-approved pulling compound or lubricant where necessary; compound used must not deteriorate conductor or insulation. Do not exceed manufacturer's recommended maximum pulling tensions and sidewall pressure values.

J. Use pulling means; including fish tape, cable, rope, and basket-weave wire/cable grips, which will not damage cables or raceway.

K. Support cables in conduit according to CSI Division 26 Section 260529, "Hangers and Supports for Electrical Systems."

L. Identify wires and cables according to CSI Division 26 Section 260553, "Identification for Electrical Systems."

3.4 CONNECTIONS:

A. Conductor Splices: Keep to minimum.

B. Install splices and taps that possess equivalent or better mechanical strength and insulation ratings than conductors being spliced.

C. Wiring at Outlets: Install conductor at each outlet, with at least 12 inches of slack.

D. Connect outlets and components to wiring and to ground as indicated and instructed by manufacturer.

E. Tighten electrical connectors and terminals according to manufacturer's published torque-tightening values. If manufacturer's torque values are not indicated, use those specified in UL 486A and UL 486B.

3.5 FIELD QUALITY CONTROL:

A. Testing: Testing and inspections shall be performed by an independent testing agency. On installation of wires and cables and before electrical circuitry has been energized, demonstrate product capability and compliance with requirements.

1. Procedures: Perform each visual and mechanical inspection and electrical test stated in NETA Acceptance Testing Specification. Certify compliance with test parameters.

2. Measure insulation resistance phase-to-phase and phase-to-ground with insulation-resistance tester. Use test voltages and procedure recommended by manufacturer. Comply with manufacturer's specified minimum resistance.

a. Check for electrical continuity of circuits and for short circuits.
b. Inspect for physical damage, proper installation and connection, and integrity of barriers, covers, and safety features.

3. Ground-Fault Tests: Coordinate with testing of ground-fault protective devices for power delivery from both sources.

a. Verify grounding connections.

B. Correct malfunctioning conductors and cables at Project Site, where possible, and retest to demonstrate compliance; otherwise, remove and replace with new conductors and retest.

C. Reports of the inspections and testing shall be submitted to the engineer.

END OF SECTION 260519

SECTION 260526 – GROUNDING AND BONDING FOR ELECTRICAL SYSTEMS

PART 1 - GENERAL

1.1 SUMMARY:

A. This Section includes grounding of electrical systems and equipment. Grounding requirements specified in this Section may be supplemented by special requirements of systems described in other Sections.

B. Related CSI Sections include the following:

1. Division 26 Section 260543, "Underground Ducts and Raceways for Electrical Systems".

2. Division 26 Section 260533, “Raceways and Boxes for Electrical Systems”.

3. Division 26 Section 260519, “Low-voltage Electrical Power Conductors and Cables”.

C. System grounding shall be as shown on the plans. All grounding conductors incorporated to the existing system shall be approved by the Engineer.

1.2 SUBMITTALS:

A. Submit the following in accordance with Form 817 Article 1.20-1.05.02 and NOTICE TO CONTRACTOR – SUBMITTALS.

B. Product Data: For the following:

1. Ground rods.
2. Hardware including clamps, connectors, etc.

C. Qualification Data: For firms and persons specified in Part 1.3, "Quality Assurance".

D. Field Test Reports: Submit written test reports to include the following:

1. Test procedures used.
2. Test results that comply with requirements.
3. Results of failed tests and corrective action taken to achieve test results that comply with requirements.

1.3 QUALITY ASSURANCE:

A. Testing Agency Qualifications: Testing shall be performed by an independent testing agency as defined by OSHA in 29 CFR 1910.7 or a member company of the NETA and that is acceptable to authorities having jurisdiction.

1. Testing Agency's Field Supervisor: Person currently certified by the NETA to supervise on-site testing specified in Part 3.

B. Electrical Components, Devices, and Accessories: Listed and labeled as defined in NFPA 70, Article 100, by a testing agency acceptable to authorities having jurisdiction, and marked for intended use.

1. Comply with UL 467 for grounding and bonding materials and equipment.

PART 2 - PRODUCTS

2.1 MANUFACTURERS:

A. Available Manufacturers: Subject to compliance with requirements, manufacturers offering products that may be incorporated into the Work include, but are not limited to, the following:

2. Grounding Conductors, Cables, Connectors, and Rods:

a. Galvan Industries, Inc.
b. Lightning Master Corp.
c. Salisbury: W.H. Salisbury & Co., Utility
d. Thomas & Betts, Electrical.

2.2 GROUNDING CONDUCTORS:

A. Ground Cable: annealed concentric stranded, copper cable the size shown on the plans and in accordance with ASTM 8 and Article 250 of the NEC. For insulated conductors, comply with CSI Division 26 Section 260519, "Low-Voltage Electrical Power Conductors and Cables".

B. Material: Copper.

C. Equipment Grounding Conductors: Insulated with green-colored insulation.

D. Intrinsically Safe Ground Conductors: Insulated with green-colored insulation with yellow stripe. On feeders with isolated ground, use colored tape, alternating bands of green and yellow tape to provide a minimum of three bands of green and two bands of yellow.

E. Grounding Electrode Conductors: Annealed, concentric stranded, copper cable sized in accordance with ASTM B 8 and Article 250 of the NEC.

F Underground Conductors shall be bare, tinned, stranded, unless otherwise indicated.

G Bare Copper Conductors: Comply with the following:

1. Assembly of Stranded Conductors: ASTM B 8.

H Copper bonding Conductors: As follows:

1. Bonding Cable: 28 kcmil, 14 strands of No. 17 AWG copper conductor, 1/4 inch in diameter.
2. Bonding Conductor: No. 4 or No. 6 AWG, stranded copper conductor.
3. Bonding Jumper: Bare copper tape, braided bare copper conductors, terminated with copper ferrules; 1-5/8 inches wide and 1/16 inch thick.

I Grounding Bus: Bare, annealed copper bars of rectangular cross section, with insulators.

2.3 CONNECTOR PRODUCTS:

A. Comply with IEEE 837 and UL 467; listed for use for specific types, sizes, and combinations of conductors and connected items.

B. Bolted Connectors: Bolted-pressure-type connectors, or compression type.

C. Welded Connectors: Exothermic-welded type, in kit form, and selected per manufacturer's written instructions. Below–grade (embedded or buried) copper grounding cable connections shall be made by exothermic welding. Exothermic welded connectors shall be Erico products Company, Cadweld or approved equal. Bolted connectors shall be of the types shown on the plans and shall be used for above ground connection only. Connections to stainless steel cables shall be welded.

D. Compression Type Cable Connectors: Shall be the heavy duty, cast-copper-alloy type, compressed by precision dies and shall have a current-carrying capacity at least equal to that of the copper cable with which they are used. Tooling shall be made by the same manufacturer as the connectors. Compression type connectors shall be Thomas and Betts type 53050 and 53065-58GR, or approved equal.

2.4 GROUNDING ELECTRODES:

A. Ground Rods: Ground Rods: Shall be pointed, copper-clad steel, 3/4-inch in diameter and ten feet long (minimum) or as shown on plans.

1. Size: 3/4 by 120 inches.

PART 3 - EXECUTION

3.1 APPLICATION:

A. All electrical equipment enclosures and equipment, and all metallic parts of the installation, including metallic conduits, wireways shall be bonded and connected to the nearest ground cable, whether shown on the Plans or not. Use only copper conductors for both insulated and bare grounding conductors in direct contact with earth, concrete, masonry, crushed stone and similar materials.

B. In raceways, use insulated equipment grounding conductors. The electrical continuity of wireways, air ducts, fence, enclosures, and handrails shall be maintained by bonding. Bonding of electrical raceway and enclosures shall assure electrical continuity and the capacity to conduct safety and fault current that could be imposed. Bonding shall comply fully with Article 250 of the NEC.

C. Exothermic-Welded Connections: Use for connections for underground connections. Grounding connections shall be made in accordance with the Contract and as specified. Paint, scale, rust, corrosion, and other foreign matter shall be removed from the points of contact on metal surfaces before ground connections are made.

D. Ground tap connections to equipment shall be made at the points provided on the equipment for grounding in accordance with the equipment manufacturer's recommendations. Connections from ground conductors to the ground bars of panelboards and other cabinet-mounted equipment shall be made by means of an acceptable bolted fitting.

E. All electrical power apparatus shall be provided with a ground-fault-current return path. Motors and power receptacles shall utilize a grounded, identified separate grounding conductor in the feeder or branch circuit raceway which connects the motor frame or receptacle to the panelboard ground bus.

F. All electrical power equipment shall be provided with an identified grounding conductor, including rigid steel conduit in accordance with NEC 344, is used for the raceway.

G. The Grounding conductor shall in no case be a system neutral or a current-carrying conductor. Where a circuit consists of two or more power conductors in a conduit or wiring channel, the grounding conductor may be one standard wire size smaller than the power conductor, but in no case smaller than No. 14 nor larger than No. 4/0, and shall be stranded and covered by green insulation. In all cases, the white insulated wire shall be used for the current-carrying neutral only.

H. Metallic sheaths or shields of shielded cable for power and control shall be terminated by a copper grounding strip provided with a connector for connection to

the station ground. The manufacturer of the cable shall furnish instructions for ground termination of shielded cable.

3.2 EQUIPMENT GROUNDING CONDUCTORS:

A. Comply with NFPA 70, Article 250, for types, sizes, and quantities of equipment grounding conductors, unless specific types, larger sizes, or more conductors than required by NFPA 70 are indicated.

B. Install equipment grounding conductors in all feeders and circuits.

C. Install insulated equipment grounding conductor with circuit conductors for the following items, in addition to those required by NEC:

1. Feeders and branch circuits.
2. Receptacle circuits.
3. Single-phase motor and appliance branch circuits

D. Busway Supply Circuits: Install insulated equipment grounding conductor from the grounding bus in the switchgear, switchboard, or distribution panel to equipment grounding bar terminal on busway.

E. Computer Outlet Circuits: Install insulated equipment grounding conductor in branch-circuit runs from computer-area power panels or power-distribution units.

F. Nonmetallic Raceways: Install an equipment grounding conductor in nonmetallic raceways unless they are designated for telephone or data cables.

G. Common Ground Bonding: Use bonding conductor sized same as system grounding electrode conductor, and install in conduit.

1. Use bonding conductor sized the same as system grounding electrode conductor, and install in conduit.

H. Metal Poles Supporting Outdoor Lighting Fixtures: Provide a grounding electrode in addition to installing a separate equipment grounding conductor with supply branch-circuit conductors.

I. Provide lightning protection/grounding for AST. Refer to specification 132160. All metallic parts shall be bonded with a #4 AWG bare copper stranded conductor connected to #4/0 AWG bare copper stranded grounding ring using exothermic welds. Grounding rods connected to grounding ring using exothermic welds.

3.3 INSTALLATION:

A. All grounding electrodes shall be bonded together to form the grounding electrode system.

B. Ground Rods: Install at least two rods spaced at least one-rod length from each other and located at least the same distance from other grounding electrodes.

1. Drive ground rods until tops are 6 inches below finished floor or final grade, unless otherwise indicated.
2. Interconnect ground rods with grounding electrode conductors. Use exothermic welds, except as otherwise indicated. Make connections without exposing steel or damaging copper coating.

C. Grounding Conductors: Route along shortest and straightest paths possible, unless otherwise indicated. Avoid obstructing access or placing conductors where they may be subjected to strain, impact, or damage.

D. Bonding Straps and Jumpers: Install so vibration by equipment mounted on vibration isolation hangers and supports is not transmitted to rigidly mounted equipment. Use exothermic-welded connectors for outdoor locations, unless a disconnect-type connection is required; then, use a bolted clamp. Bond straps directly to the basic structure taking care not to penetrate any adjacent parts. Install straps only in locations accessible for maintenance.

E. Bond interior metal piping systems and metal air ducts to equipment grounding conductors of associated pums, fans, blowers, electric heaters, and air cleaners. Use braided-type bonding straps.

F. Grounding and Bonding of Piping: Bond each aboveground portion of gas piping system downstream from equipment shutoff valve. Use braided-type bonding straps.

3.4 CONNECTIONS:

A. General: Make connections so galvanic action or electrolysis possibility is minimized. Select connectors, connection hardware, conductors, and connection methods so metals in direct contact will be galvanically compatible.

1. Use electroplated or hot-tin-coated materials to ensure high conductivity and to make contact points closer to order of galvanic series.
2. Make connections with clean, bare metal at points of contact.
3. Make aluminum-to-steel connections with stainless-steel separators and mechanical clamps.
4. Make aluminum-to-galvanized steel connections with tin-plated copper jumpers and mechanical clamps.

5. Coat and seal connections having dissimilar metals with inert material to prevent future penetration of moisture to contact surfaces.

B. Exothermic-Welded Connections: Comply with manufacturer's written instructions. Welds that are puffed up or that show convex surfaces indicating improper cleaning are not acceptable.

C. Equipment Grounding Conductor Terminations: For No. 8 AWG and larger, use pressure-type grounding lugs. No. 10 AWG and smaller grounding conductors may be terminated with winged pressure-type connectors.

D. Noncontact Metal Raceway Terminations: If metallic raceways terminate at metal housings without mechanical and electrical connection to housing, terminate each conduit with a grounding bushing. Connect grounding bushings with a bare grounding conductor to grounding bus or terminal in housing. Bond electrically noncontinuous conduits at entrances and exits with grounding bushings and bare grounding conductors, unless otherwise indicated.

E. Tighten screws and bolts for grounding and bonding connectors and terminals according to manufacturer's published torque-tightening values. Compression-Type Connections: Use hydraulic compression tools to provide correct circumferential pressure for compression connectors. Use tools and dies recommended by connector manufacturer. Provide embossing die code or other standard method to make a visible indication that a connector has been adequately compressed on grounding conductor.

F. Moisture Protection: If insulated grounding conductors are connected to ground rods or grounding buses, insulate entire area of connection and seal against moisture penetration of insulation and cable.

END OF SECTION 260526

SECTION 260529 - HANGERS AND SUPPORTS FOR ELECTRICAL SYSTEMS

PART 1 - GENERAL

1.1 SUMMARY:

A. This Section includes the following:

1. Hangers and supports for electrical equipment and systems.

1.2 PERFORMANCE REQUIREMENTS:

A. Delegated Design: Design supports for multiple raceways, including comprehensive engineering analysis by a qualified professional engineer, using performance requirements and design criteria indicated.

B. Design supports for multiple raceways capable of supporting combined weight of supported systems and its contents.

C. Design equipment supports capable of supporting combined operating weight of supported equipment and connected systems and components.

1.3 SUBMITTALS:

A. Submit the following in accordance with Form 817 Article 1.20-1.05.02 and NOTICE TO CONTRACTOR – SUBMITTALS.

B. Product Data: For the following:

1. Steel slotted support systems.

C. Shop Drawings: For the following:

1. Trapeze hangers.
2. Steel slotted channel systems.
3. Equipment supports.
4. Hardware.

D. Welding certificates.

1.4 QUALITY ASSURANCE:

A. Welding: Qualify procedures and personnel according to AWS D1.1/D1.1M, "Structural Welding Code - Steel."

B. Comply with NFPA 70.

PART 2 - PRODUCTS

2.1 SUPPORT, ANCHORAGE, AND ATTACHMENT COMPONENTS:

A. Steel Slotted Support Systems and C-channels: Comply with MFMA-4, factory-fabricated components for field assembly.

1. Available Manufacturers: Subject to compliance with requirements, manufacturers offering products that may be incorporated into the Work include, but are not limited to, the following:

a. Allied Tube & Conduit.
b. Cooper B-Line, Inc.; a division of Cooper Industries.
c. ERICO International Corporation.
d. Thomas & Betts Corporation.

2. Metallic Coatings: Hot-dip galvanized after fabrication and applied according to MFMA-4. Stainless steel for corrosive areas.
3. Channel Dimensions: Selected for applicable load criteria.

B. Raceway and Cable Supports: As described in NECA 1 and NECA 101.

C. Conduit and Cable Support Devices: Steel hangers, clamps, and associated fittings, designed for types and sizes of raceway or cable to be supported. PVC coated or Stainless steel required for corrosive locations.

D. Support for Conductors in Vertical Conduit: Factory-fabricated assembly consisting of threaded body and insulating wedging plug or plugs for non-armored electrical conductors or cables in riser conduits. Plugs shall have number, size, and shape of conductor gripping pieces as required to suit individual conductors or cables supported. Body shall be malleable iron. Provide stainless steel supports for conduit installed in corrosive areas.

E. Structural Steel for Fabricated Supports and Restraints: ASTM A 36/A 36M, steel plates, shapes, and bars; black and galvanized.

F. Mounting, Anchoring, and Attachment Components: Items for fastening electrical items or their supports to building surfaces include the following:

1. Powder-Actuated Fasteners: Threaded-steel stud, for use in hardened portland cement concrete, steel, or wood, with tension, shear, and pullout capacities appropriate for supported loads and building materials where used.

a. Available Manufacturers: Subject to compliance with requirements, manufacturers offering products that may be incorporated into the Work include, but are not limited to, the following:

1) Hilti Inc.
2) ITW Ramset/Red Head; a division of Illinois Tool Works, Inc.
3) MKT Fastening, LLC.

2. Mechanical-Expansion Anchors: Insert-wedge-type, stainless steel, for use in hardened Portland cement concrete with tension, shear, and pullout capacities appropriate for supported loads and building materials in which used.

a. Available Manufacturers: Subject to compliance with requirements, manufacturers offering products that may be incorporated into the Work include, but are not limited to, the following:

1) Hilti Inc.
2) ITW Ramset/Red Head; a division of Illinois Tool Works, Inc.
3) MKT Fastening, LLC.

3. Concrete Inserts: Steel or malleable-iron, slotted support system units similar to MSS Type 18; complying with MFMA-4 or MSS SP-58.
4. Clamps for Attachment to Steel Structural Elements: MSS SP-58, type suitable for attached structural element.
5. Through Bolts: Structural type, hex head, and high strength. Comply with ASTM A 325.
6. Toggle Bolts: All-steel springhead type.
7. Hanger Rods: Threaded steel.

G. Hardware: For corrosive areas and wet locations all hardware shall be stainless steel. For all other areas use zinc plated hardware.

PART 3 - EXECUTION

3.1 APPLICATION:

A. Comply with NECA 1 and NECA 101 for application of hangers and supports for electrical equipment and systems except if requirements in this Section are stricter.

B. Maximum Support Spacing and Minimum Hanger Rod Size for Raceway: Space supports for EMT, and RGSC as required by scheduled in NECA 1, where its Table 1 lists maximum spacings less than stated in NFPA 70. Minimum rod size shall be 1/4 inch in diameter.

C. Multiple Raceways or Cables: Install trapeze-type supports fabricated with steel slotted or other support system, sized so capacity can be increased by at least 25 percent in future without exceeding specified design load limits.

1. Secure raceways and cables to these supports with two-bolt conduit clamps or approved clamps.

D. Spring-steel clamps designed for supporting single conduits without bolts may be used for 1-1/2-inch and smaller raceways serving branch circuits and communication systems above suspended ceilings and for fastening raceways to trapeze supports.

3.2 SUPPORT INSTALLATION:

A. Comply with NECA 1 and NECA 101 for installation requirements except as specified herein.

B. Raceway Support Methods: In addition to methods described in NECA 1, EMT and RGSC may be supported by openings through structure members, as permitted in NFPA 70.

C. Strength of Support Assemblies: Where not indicated, select sizes of components so strength will be adequate to carry present and future static loads within specified loading limits. Minimum static design load used for strength determination shall be weight of supported components plus 200 lb.

D. Mounting and Anchorage of Surface-Mounted Equipment and Components: Anchor and fasten electrical items and their supports to building structural elements by the following methods unless otherwise indicated by code:

1. To Wood: Fasten with lag screws or through bolts.
2. To New Concrete: Bolt to concrete inserts.
3. To Masonry: Approved toggle-type bolts on hollow masonry units and expansion anchor fasteners on solid masonry units.
4. To Existing Concrete: Expansion anchor fasteners.
5. Instead of expansion anchors, powder-actuated driven threaded studs provided with lock washers and nuts may be used in existing standard-weight concrete 4 inches thick or greater. Do not use for anchorage to lightweight-aggregate concrete or for slabs less than 4 inches thick.
6. To Steel: Welded threaded studs complying with AWS D1.1/D1.1M, with lock washers and nuts. Or Beam clamps (MSS Type 19, 21, 23, 25, or 27) complying with MSS SP-69.
7. To Light Steel: Sheet metal screws.
8. Items Mounted on Hollow Walls and Nonstructural Building Surfaces: Mount cabinets, panelboards, disconnect switches, control enclosures, pull and junction boxes, transformers, and other devices on slotted-channel racks attached to substrate by means that meet seismic-restraint strength and anchorage requirements.

E. Drill holes for expansion anchors in concrete at locations and to depths that avoid reinforcing bars.

END OF SECTION 260529

SECTION 260533 - RACEWAYS AND BOXES FOR ELECTRICAL SYSTEMS

PART 1 - GENERAL

1.1 SUMMARY:

A. Section Includes:

1. Raceways include the following:

a. RGSC
b. EMT above 10’ elevation in bays, Electrical Room, Mechanical Room, Office of the maintenance facility.
c. PVC schedule 80 conduits for conduit below grade.
d. FMC.
e. LFMC.
f. Wireways.

2. Boxes, enclosures, and cabinets include the following:

a. Device boxes.
b. Outlet boxes.
c. Pull and junction boxes.
d. Cabinets and hinged-cover enclosures.
f. Explosion proof fittings.

B. Related CSI Sections include the following:

1. Division 26 Section 260544, "Sleeves and Sleeve Seals for Electrical Raceways and Cabling"
2. Division 26 Section 260543, “Underground Ducts and Raceways for Electrical Systems”
3. Division 26 Section 262726, "Wiring Devices"

1.2 DEFINITIONS:

1. EMT: Electrical metallic tubing.
2. FMC: Flexible metal conduit.
3. RGSC: Rigid galvanized metal conduit.
4. LFMC: Liquidtight flexible nonmetallic conduit.
5. PVC: Polyvinyl chloride conduit.

1.3 SUBMITTALS:

A. Submit the following in accordance with Form 817 Article 1.20 -1.05.02 and NOTICE TO CONTRACTOR – SUBMITTALS.

B. Product Data: For surface raceways, wireways and fittings, hinged-cover enclosures, and cabinets.

C. Shop Drawings: For the following raceways components. Include plans, elevations, sections, details, and attachments to other work.

1. Custom enclosures and cabinets.
2. For boxes, including the following:

a. Conduit entry provisions, including locations and conduit sizes
b. Box cover design
c. Grounding details
d. Dimensioned locations of cable rack inserts, and pulling-in and lifting irons
e. Joint details

1.4 QUALITY ASSURANCE:

A. Listing and Labeling: Provide raceways and boxes specified in this Section that are listed and labeled.

1. The Terms "Listed" and "Labeled": As defined in NFPA 70, Article 100.

B. Comply with NEC's "Standard of Installation."

C. Comply with NFPA 70.

1.5 COORDINATION:

A. Coordinate layout and installation of raceways and boxes with other construction elements to ensure adequate headroom, working clearance, and access.

PART 2 - PRODUCTS

2.1 MANUFACTURERS:

A. Available Manufacturers: Subject to compliance with requirements, manufacturers offering products that may be incorporated into the Work include, but are not limited to, the following:

1. Metal Conduit and Tubing:

a. Alflex Corp.
b. Anamet, Inc.; Anaconda Metal Hose.
c. Anixter Brothers, Inc.

2. Conduit Bodies and Fittings:

a. American Electric; Construction Materials Group.
b. Crouse-Hinds; Div. of Cooper Industries.
c. Emerson Electric Co.; Appleton Electric Co.

3. Metal Wireways:

a. Hoffman Engineering Co.
b. Keystone/Rees, Inc.
c. Square D Co.

4. Boxes, Enclosures, and Cabinets:

a. American Electric; FL Industries.
b. Butler Manufacturing Co.; Walker Division.
c. Crouse-Hinds; Div. of Cooper Industries.

2.2 CONDUIT AND TUBING:

A. RGSC: ANSI C80.1. Fittings: threaded type.

B. EMT and Fittings: ANSI C80.3. Fittings: Set-screw or compression type. Cast fittings shall be made of steel or malleable iron, hot-dip galvanized finish.

C. FMC: Zinc-coated steel.

D. LFMC: Flexible steel conduit with PVC jacket.

E. PVC: PVC Schedule 80 Nonmetallic conduits, tubing, and fittings shall be listed and labeled as defined in NFPA 70, by a qualified testing agency, and marked for intended location and application. Shall comply with NEMA TC 2 and UL 651 unless otherwise indicated.

F. Fittings/conduit bodies for Metallic Conduit: Comply with NEMA FB 1 and UL 514B; match conduit/tubing materials. Cast fittings shall be made of steel or malleable iron, hot-dip galvanized finish. Covers for conduit bodies installed in wet locations shall be gasketed.

G. Fittings/Conduit bodies RNC: Comply with NEMA TC 3; match to conduit or tubing type and material.

H. Explosion Proof Fittings: Conduit Fittings for Hazardous (Classified) Locations: Comply with UL 886 and NFPA 70. Threaded, recessed-type, close-up plugs. Screwdriver slotted close-up plugs shall not be accepted. Fittings shall be made of malleable iron.

I. Solvent cements and adhesive primers shall have a VOC content of 510 and 550 g/L or less, respectively, when calculated according to 40 CFR 59, Subpart D (EPA Method 24).

2.3 METAL WIREWAYS:

A. Material: Sheet metal sized and shaped as indicated. The exterior installed wireways shall be stainless steel or 4X or 3R as indicated on plans.

B. Fittings and Accessories: Include couplings, offsets, elbows, expansion joints, adapters, hold-down straps, end caps, and other fittings to match and mate with wireways as required for complete system.

C. Select features, unless otherwise indicated, as required to complete wiring system and to comply with NFPA 70.

D. Wireway Covers: Hinged type.

E. Finish: Manufacturer's standard enamel finish.

2.4 OUTLET AND DEVICE BOXES:

A. Sheet Metal Boxes: NEMA OS 1.

B. Steel-Metal Boxes: NEMA FB 1, Type FD, cast box with gasketed cover.

C. Nonmetallic Boxes: NEMA OS 2.

D. Boxes and fittings: Boxes and fittings shall comply with the applicable provisions of NFPA 70, Article 370.

E. All outlet and device boxes installed in the salt shed shall be of corrosive resistant type material.

2.5 PULL AND JUNCTION BOXES:

A. Small Sheet Metal Boxes: NEMA OS 1.

B. Cast-Metal Boxes: NEMA FB 1, steel with gasketed cover.

C. Non-metallic Boxes: NEMA OS 2 and UL 514C.

D. All pull and junction boxes installed in the salt shed shall be of corrosive resistant type material.

2.6 ENCLOSURES AND CABINETS:

A. Hinged-Cover Enclosures: NEMA 250, Type 1, with continuous hinge cover and flush latch.

1. Metal Enclosures: Steel, finished inside and out with manufacturer's standard enamel.

2. Nonmetallic Enclosures: Plastic finished inside with radio-frequency-resistant paint.

B. Cabinets: NEMA 250, Type 1, galvanized steel box, finished inside and out with manufacturer's standard enamel. Hinged door in front covers with flush latch and concealed hinge. Key latch to match panelboards. Include metal barriers to separate wiring of different systems and voltage, and include accessory feet where required for freestanding equipment.

PART 3 - EXECUTION

3.1 EXAMINATION:

A. Examine surfaces to receive raceways, boxes, enclosures, and cabinets for compliance with installation tolerances and other conditions affecting performance of raceways installation. Do not proceed with installation until unsatisfactory conditions have been corrected.

3.2 WIRING METHODS:

A. Indoors: Use the following wiring methods:

1. Office Areas: RGSC where exposed and EMT where concealed and above 10’ elevation.
2. Damp locations: RGSC.
3. Mechanical Room, Bay area, Stores’ area: RGSC up to 10’ elevation, EMT over 10’ elevation.
4. Temporary Installation: PVC Schedule 80.
5. Boxes and Enclosures: NEMA 250, Type 1, except as follows:

(a) Corrosive Locations: NEMA Type 4X, stainless steel.
(b) Damp or Wet Locations: NEMA 250, Type 4, nonmetallic, Raceways Fittings: Compatible with raceways and suitable for use and location.

6. Rigid Steel Conduit: Use threaded rigid steel conduit fittings, unless otherwise indicated.

3.3 INSTALLATION:

A. Install raceways, boxes, enclosures, and cabinets as indicated, according to manufacturer's written instructions, following NEC and local codes. Install conduit clamps within 3’ of boxes and at 10’ maximum distance between junction points.

B. Minimum Raceways Size: 3/4-inch trade size.

C. Conceal conduit and EMT, unless otherwise indicated, within finished walls and ceilings.

D. Keep raceways at least 6 inches away from parallel runs of flues and hot-water pipes. Install horizontal raceways runs above water and steam piping.

E. Install raceways level and square and at proper elevations. Provide adequate headroom.

F. Complete raceways installation before starting conductor installation.

G. Support raceways as specified in CSI Division 26 Section 260529, "Hangers and Supports for Electrical Systems."

H. Use temporary closures to prevent foreign matter from entering raceways.

I. Stub-ups shall be rigid conduit. Protect stub-ups from damage where conduits rise through floor slabs. Arrange so curved portion of bends is not visible above the finished slab.

J. Make bends and offsets so ID is not reduced. Keep legs of bends in the same plane and straight legs of offsets parallel, unless otherwise indicated.

K. Use raceways fittings compatible with raceways and suitable for use and location. For rigid steel conduit, use threaded rigid steel conduit fittings.

L. Run concealed raceways, with a minimum of bends, in the shortest practical distance considering the type of building construction and obstructions, unless otherwise indicated.

M. Install exposed raceways parallel or at right angles to nearby surfaces or structural members, and follow the surface contours as much as practical.

1. Run parallel or banked raceways together, on common supports where practical.
2. Make bends in parallel or banked runs from same centerline to make bends parallel. Use factory elbows only where elbows can be installed parallel; otherwise, provide field bends for parallel raceways.

N. Join raceways with fittings designed and approved for the purpose and make joints tight.

1. Make raceways terminations tight. Use bonding bushings or wedges at connections subject to vibration. Use bonding jumpers where joints cannot be made tight.
2. Use insulating bushings to protect conductors.

O. Tighten set screws of threadless fittings with suitable tools.

P. Terminations: Where raceways are terminated with locknuts and bushings, align raceways to enter squarely and install locknuts with dished part against the box. Where terminations are not secure with 1 locknut, use 2 locknuts: 1 inside and 1 outside the box.

Q. Where raceways are terminated with threaded hubs, screw raceways or fittings tightly into the hub so the end bears against the wire protection shoulder. Where chase nipples are used, align raceways so the coupling is square to the box and tighten the chase nipple so no threads are exposed.

R. Install pull wires in empty raceways. Use No. 14 AWG zinc-coated steel or monofilament plastic line with not less than 200-lb tensile strength. Leave at least 12 inches of slack at each end of the pull wire. Ends shall be capped.

S. Telephone and Signal System Raceways: 3/4-Inch trade size minimum: In addition to the above requirements, install raceways in maximum lengths of 150 feet and with a maximum of two 90-degree bends or equivalent. Separate lengths with pull or junction boxes where necessary to comply with these requirements.

T. Install raceways sealing fittings according to manufacturer's written instructions. Locate fittings at suitable, approved, and accessible locations and fill them with UL-listed sealing compound. For concealed raceways, install each fitting in a flush steel box with a blank cover plate having a finish similar to that of adjacent plates or surfaces. Install raceways sealing fittings at the following points:

1. Where otherwise required by NFPA 70.

U. Stub-up Connections: Extend rigid metal conduits through concrete floor for connection to freestanding equipment. Install with an adjustable top or coupling threaded inside for plugs set flush with the finished floor. Extend conductors to equipment with rigid steel conduit; FMC may be used 6 inches above the floor or where call on the plans.

V. Install hinged-cover enclosures and cabinets plumb. Support at each corner.

W. Conduits entering enclosures, other than threaded cast boxes, shall be securely fastened by means of two lock-nuts, one on each side of the enclosure. The conduit shall be terminated in a bushing. Conduit bushings made entirely of non-metallic materials shall not be used.

X. Do not leave any box openings exposed. Install hole plugs on any knockout holes that are removed without any conduit attached.

Y. Install boxes level and plumb and with orientation and depth coordinated with connecting conduits to minimize bends and deflections required for proper entrances.

Z. Unless otherwise indicated, support units on a level bed of crushed stone or gravel, graded from 1/2-inch sieve to No. 4 sieve and compacted to same density as adjacent undisturbed earth.

AA. Install removable hardware, including pulling eyes, cable stanchions, cable arms, and insulators, as required for installation and support of cables and conductors and as indicated. Select arm lengths to be long enough to provide spare space for future cables, but short enough to preserve adequate working clearances in the enclosure.

BB. Field-cut openings for conduits according to enclosure manufacturer's written instructions. Cut wall of enclosure with a tool designed for material to be cut. Size holes for terminating fittings to be used, and seal around penetrations after fittings are installed.

3.4 PROTECTION:

A. Provide final protection and maintain conditions, in a manner acceptable to manufacturer and Installer that ensure coatings, finishes, and cabinets are without damage or deterioration at the issuance of the Certificate of Compliance.

1. Repair damage to galvanized finishes with zinc-rich paint recommended by manufacturer.
2. Repair damage to PVC or paint finishes with matching touchup coating recommended by manufacturer.

3.5 CLEANING:

A. On completion of installation, including outlet fittings and devices, inspect exposed finish. Remove burrs, dirt, and construction debris and repair damaged finish, including chips, scratches, and abrasions.

END OF SECTION 260533

SECTION 260543 - UNDERGROUND DUCTS AND RACEWAYS FOR ELECTRICAL SYSTEMS

PART 1 - GENERAL

1.1 SUMMARY:

A. This section includes underground electrical work including the following:

1. Underground conduits and conduit accessories.

1.2 SUBMITTALS:

A. Submit the following in accordance with Form 817 Article 1.20-1.05.02 and NOTICE TO CONTRACTOR SUBMITTALS.

B. Product Data: For the following:

1. Underground conduits
2. Conduits and their accessories, including elbows, end bells, bends, fittings and solvent cement.

1.3 DEFINITIONS:

A. RGSC: Rigid galvanized steel conduit

B. RNC: Rigid nonmetallic conduit

1.4 QUALITY ASSURANCE:

A. Testing Agency Qualifications: Qualified according to ASTM E 329 for testing indicated.

B. Comply with ANSI C2.

C. Comply with NFPA 70.

PART 2 - PRODUCTS

2.1 CONDUIT:

A. Rigid Steel Conduit: Galvanized. Comply with ANSI C80.1.

B. RNC: NEMA TC2, Type EPC-80-PVC, UL 651, with matching fittings by same manufacturer as the conduit, complying with NEMA TC 3 and UL 514B.

C. Plastic-Coated Steel Conduit and Fittings: NEMA RN 1, ANSI C80, 1, UL6, coating thickness: 0.040 inch, minimum.

2.2 RACEWAY/DUCT SEALING COMPOUND:

A. Compound: Nonhardening, putty-like consistency workable at temperatures as low as 35°F. Compound shall not slump at a temperature of 300°F and shall readily adhere to clean surfaces of plastic ducts, metallic conduits, conduit coatings, concrete, masonry, lead, cable sheaths, cable jackets, insulation materials, and the common metals. Compound shall have no injurious effect on worker's hands or materials.

2.3 TRENCHING AND BACKFILLING MATERIALS:

A. Form materials for this work for the encasement of conduit or cable, shall be bedding material, all of which passes a 3/8-inch sieve, and not more than 10% passes a No. 200 (75-micron) sieve. Topsoil, fertilizer, seed and mulch shall conform to Section M.13.

B. Backfill shall consist of satisfactory soil materials free of clay, rock or gravel larger than 2 inches in any dimension, debris, waste, frozen materials, vegetation and other deleterious matter. Satisfactory soil materials are defined as those complying with ASTM D2487 soil classification groups GW, GP, GM, SM, SW, and SP. Satisfactory material encountered during the excavation may be stored in segregated stockpile for re-use as backfill.

PART 3 - EXECUTION

3.1 UNDERGROUND CONDUITS:

A. All underground conduits shall contain a pull wire, Greenlee No. 430 Poly Pull Line or equal, approved by the Designer. Use PVC schedule 80 under grass and pavement. RGSC conduit shall be installed the last two feet as the conduit is routed to the fuel dispensers, underground tanks, lighting poles, and building stub-ups. Provide PVC coated TGSC for conduit sweeps/stub-ups located in bituminous and walkways.

B. RGSC:

1. RGSC conduit shall be installed as shown on the contract plans. All metallic conduits shall be installed in accordance with manufacturer's instructions. Minimum size shall be ¾ inches.
2. Termination of conduits in handholes or other concrete structures shall be made with end bells.
3. All conduit runs shall leave or enter structures perpendicularly.

C. PVC:

1. PVC conduit shall be installed outside of building areas, under pavement to the Fuel Island and motor fuel. All nonmetallic conduits shall be installed in accordance with manufacturer's instructions. Minimum size shall be ¾ inches.
2. RGSC shall be used for the last two (2) feet of underground run to emergence or the point of connection to the aboveground raceway in accordance with NEC 514.8, Exception No. 2 and NEC 515.8(A).
3. All conduit runs shall leave or enter structures perpendicularly.

D. Elbows or bends shall be in accordance the NEC.

E. Transitions between conduits of different materials shall be made using the manufacturer's standard adapters.

F. Building Wall Penetrations: Rigid steel conduit. Use fittings manufactured for duct-to-conduit transition. Install conduit penetrations of building walls as specified in CSI Division 26 Section 260544, "Sleeves and Sleeve Seals for Electrical Raceways and Cabling."

G. Sealing: Provide temporary closure at terminations of ducts that have cables pulled. Seal spare ducts at terminations. Use sealing compound and plugs to withstand at least 15-psig hydrostatic pressure.

H. Pulling Cord: Install test Greenlee No. 430 Poly Pull Line nylon cord in conduits, including spares.

I. PVC Coated RGSC:
1. All PVC coated metallic conduits shall be installed in accordance with manufacturer's instructions. Minimum size shall be ¾ inches.
2. Terminations of conduits in concrete structures shall be made with end bells. All conduit runs shall leave or enter structures perpendicularly.

3.2 CONDUIT – CLEANING AND TESTING:

A. After conduits and accessories have been installed and all concreting operations, if any, completed, carefully clean and clear all conduit runs of all obstructions and foreign matter to the satisfaction of the Engineer.

B. Test conduits in the presence of the Engineer by pulling through each conduit 20 foot lengths of single conductor, Type THWN cable of the size and number given in the following table, or where called for, a flexible cylindrical mandrel having an outside diameter 1/4-inch less than the inside diameter of the conduit. Only nylon cable (no rope) that will withstand a reasonable stress shall be used to pull the mandrel through the conduit system.

Conduit Size	Wire Size or Mandrel
2 inch	3 - 250 kcmil
3 inch and larger	Mandrel

3.3 GROUNDING:

A. Ground underground ducts according to CSI Division 26 Section 260526 "Grounding and Bonding for Electrical Systems."

3.4 EXCAVATION AND BACKFILL:

A. The trench shall be backfilled in at least two layers with excavated material not larger than 4 inches in diameter and thoroughly tamped and compacted to at least the density of the surrounding undisturbed soil. If necessary to obtain the desired compaction, the backfill material shall be moistened or aerated as required.

B. Where trenching occurs in riprap or crushed stone areas, the surface material shall be replaced in kind. Where trenching in paved areas, the trench shall be sawcut and backfilled to the depth of the surface required to replace the removed pavement structure, which shall then be replaced. The edges of all trenches in paved surfaces shall be sawcut to neat lines prior to repaving.

C. Trenches shall not be excessively wet and shall not contain pools of water during backfilling operations.

D. The trench shall be completely backfilled and tamped level with the adjacent surface: except that, when sod is to be placed over the trench, the backfilling shall be stopped at a depth equal to the thickness of the sod to be used, with proper allowance for settlement.

E. Any excess excavation material shall be removed and disposed of in accordance with instructions issued by the Engineer.

F. For ducts without concrete envelope, 8 inches of sand, soft earth, or other fine fill (loose measurement) shall be placed around the ducts and carefully tamped around and over them with hand tampers. The remaining trench may be filled with regular run of excavated material and thoroughly tamped as specified above.

G. Where sod has been removed, it shall be replaced as soon as possible after the backfilling is completed. All areas disturbed by the trenching, storing of dirt, cable laying, pad construction and other work shall be restored to its original condition. The restoration shall include any necessary topsoiling, fertilizing, liming, seeding, sprigging, or mulching. The Installer shall be held responsible for maintaining all disturbed surfaces and replacements until final acceptance.

3.5 FIELD QUALITY CONTROL:

A. Perform the following tests and inspections and prepare test reports:

1. Demonstrate capability and compliance with requirements on completion of installation of underground ducts and utility structures.
2. Pull aluminum or wood test mandrel through duct to prove joint integrity and test for out-of-round duct. Provide mandrel equal to 80 percent fill of duct. If obstructions are indicated, remove obstructions and retest.

B. Correct deficiencies and retest as specified above to demonstrate compliance.

3.6 CLEANING:

A. Pull leather-washer-type duct cleaner, with graduated washer sizes, through full length of ducts. Follow with rubber duct swab for final cleaning and to assist in spreading lubricant throughout ducts.

END OF SECTION 260543

SECTION 260544 – SLEEVES AND SLEEVE SEALS FOR ELECTRICAL RACEWAYS AND CABLING

PART 1 - GENERAL

1.1 SUMMARY:

A. Section Includes:

1. Sleeves for raceways
2. Sleeve-seal systems
3. Sleeve-seal fittings
4. Grout.
5. Silicon Sealants

1.2 DEFINITIONS:

A. EPDM: Ethylene-propylene-diene terpolymer rubber.

B. NBR: Acrylonitrile-butadiene rubber.

1.3 SUBMITTALS:

A. Submit the following in accordance with Form 817 Article 1.20-1.05.02 and NOTICE TO CONTRACTOR SUBMITTALS.

B. Product Data: For sleeve seals and silicon sealants.

C. Quality Assurance Submittals

1. Manufacturer Certification Letter in accordance with NOTICE TO CONTRACTOR – POTENTIAL FOR ASBESTOS CONTAINING MATERIALS.

1.4 COORDINATION:

A. Coordinate sleeve selection and application with selection and application of firestopping.

PART 2 - PRODUCTS

2.1 SLEEVES FOR RACEWAYS AND CABLES:

A. Steel Pipe Sleeves: ASTM A 53/A 53M, Type E, Grade B, Schedule 40, galvanized steel, plain ends.

B. Sleeves for Conduits penetrating Non-Fire-Rated Gypsum Board Assemblies: galvanized-steel sheet, 0.0239 inch minimum thickness; round tube closed with welded longitudinal joint, with tabs for screw-fastening the sleeve to the board.

C. Sleeves for Rectangular Openings: Galvanized sheet steel.

1. Minimum Metal Thickness:

a. For sleeve cross-section rectangle perimeter less than 50 inches and no side more than 16 inches, thickness shall be 0.052 inch.
b. For sleeve cross-section rectangle perimeter equal to, or more than, 50 inches and 1 or more sides equal to, or more than, 16 inches, thickness shall be 0.138 inch.

D. Coordinate sleeve selection and application of firestopping.

2.2 SLEEVE-SEAL SYSTEM:

A. Description: Modular sealing device, designed for field assembly, to fill annular space between sleeve and raceway or cable.

1. Manufacturers: Subject to compliance with requirements. Available manufacturers offering products that may be incorporated into the Work include, but are not limited to, the following:

a. Advance Products & Systems, Inc.
b. Calpico, Inc.
c. Metraflex Co.
d. Pipeline Seal and Insulator, Inc.

2. Sealing Elements: Interlocking links shaped to fit surface of cable or conduit. Include type and number required for material and size of raceway or cable.
3. Pressure Plates: Carbon steel. Include two for each sealing element.
4. Connecting Bolts and Nuts: Carbon steel of length required to secure pressure plates to sealing elements. Include one for each sealing element.

2.3 SLEEVE-SEAL FITTINGS:

A. Description: Manufactured plastic, sleeve-type, waterstop assembly made for embedding in concrete slab or wall. Unit shall have plastic or rubber waterstop collar with center opening to match piping OD.

1. Manufacturers: Subject to compliance with requirements. Available manufacturers offering products that may be incorporated into the Work include, but are not limited to, the following:

a. Presealed Systems.

2.4 GROUT:

A. Nonmetallic, Shrinkage-Resistant Grout: ASTM C 1107, factory-packaged, nonmetallic aggregate grout, noncorrosive, nonstaining, mixed with water to consistency suitable for application and a 30-minute working time.

2.5 SILICONE SEALANTS:

A. Silicone Sealants: Single-component, silicone-based, neutral-curing elastomeric sealants of grade indicated below.

1. Grade: Pourable (self-leveling) formulation for openings in floors and other horizontal surfaces that are not fire rated.

2. Sealant shall have VOC content of 43 g/L or less when calculated according to 40 CFR 59, Subpart D (EPA Method 24).

B. Silicone Foams: Multicomponent, silicone-based liquid elastomers that, when mixed, expand and cure in place to produce a flexible, nonshrinking foam

PART 3 - EXECUTION

3.1 SLEEVE INSTALLATION FOR RACEWAYS AND CABLES:

A. Comply with NECA 1.

B. Comply with NEMA VE 2 for cable tray and cable penetrations.

C. Sleeves for Conduits Penetrating Above-Grade Non-Fire-Rated Concrete and Masonry-Unit Floors and Walls:

1. Interior Penetrations of Non-Fire-Rated Walls and Floors:

a. Seal annular space between sleeve and raceway or cable, using joint sealant appropriate for size, depth, and location of joint.
b. Seal space outside of sleeves with mortar or grout. Pack sealing material solidly between sleeve and wall so no voids remain. Tool exposed surfaces smooth; protect material while curing.

2. Use pipe sleeves unless penetration arrangement requires rectangular sleeved opening.
3. Size pipe sleeves to provide ¼ annular clear space between sleeve and raceway or cable unless sleeve seal is to be installed.
4. Install sleeves for wall penetrations unless core-drilled holes or formed openings are used. Install sleeves during erection of walls. Cut sleeves to length for mounting flush with both surfaces of walls. Deburr after cutting.
5. Install sleeves for floor penetrations. Extend sleeves installed in floors 2 inches above finished floor level. Install sleeves during erection of floors.

D. Sleeves for Conduits Penetrating Non-Fire-Rated Gypsum Board Assemblies:

1. Use circular metal sleeves unless penetration arrangement requires rectangular sleeved opening.
2. Seal space outside of sleeves with approved joint compound for gypsum board assemblies.

E. Aboveground, Exterior-Wall Penetrations: Seal penetrations using steel pipe sleeves and mechanical sleeve seals. Select sleeve size to allow for 1-inch annular clear space between pipe and sleeve for installing mechanical sleeve seals.

F. Underground, Exterior-Wall and Floor Penetrations: Install galvanized steel sleeves. Size sleeves to allow for 1-inch annular clear space between raceway or cable and sleeve for installing sleeve-seal system.

G. Fire-Rated-Assembly Penetrations: Maintain indicated fire rating of walls, partitions, ceilings, and floors at raceway and cable penetrations. Install sleeves and seal raceway and cable penetration sleeves with firestop materials.

H. Openings around electrical penetrations through fire-resistant- rated walls, partitions, floors, or ceilings shall be firestopped using approved methods to maintain the fire resistance rating.

I. Materials used in firestop systems are to be installed in accordance with the manufacturers' instructions provided with the materials. The structural integrity of the floor or wall assembly needs to be evacuated when providing openings for the penetrating items

3.2 SLEEVE-SEAL-SYSTEM INSTALLATION:

A. Install sleeve-seal systems in sleeves in exterior concrete walls and slabs-on-grade at raceway entries into building.

B. Install type and number of sealing elements recommended by manufacturer for raceway or cable material and size. Position raceway or cable in center of sleeve. Assemble mechanical sleeve seals and install in annular space between raceway or cable and sleeve. Tighten bolts against pressure plates that cause sealing elements to expand and make watertight seal.

3.3 SLEEVE-SEAL-FITTING INSTALLATION

A. Install sleeve-seal fittings in new walls and slabs as they are constructed.

B. Assemble fitting components of length to be flush with both surfaces of concrete slabs and walls. Position waterstop flange to be centered in concrete slab or wall.

C. Secure nailing flanges to concrete forms.

D. Using grout, seal the space around outside of sleeve-seal fittings

END OF SECTION 260544

SECTION 260553 – IDENTIFICATION FOR ELECTRICAL SYSTEMS

PART 1 - GENERAL

1.1 SUMMARY:

A. This Section includes electrical identification materials and devices required to comply with ANSI C2, NFPA 70, OSHA standards, and authorities having jurisdiction.

1.2 SUBMITTALS:

A. Submit the following in accordance with Form 817 Article 1.20-1.05.02 and NOTICE TO CONTRACTOR – SUBMITTALS.

B. Product Data: For each electrical identification product indicated.

C. Schedule of Nomenclature: An index of electrical equipment and system components used in identification signs and labels.

1.3 QUALITY ASSURANCE:

A. Comply with ANSI C2.

B. Comply with NFPA 70.

C. Comply with ANSI A13.1 and NFPA 70 for color-coding.

PART 2 - PRODUCTS

2.1 RACEWAY AND CABLE LABELS:

A. Comply with ANSI A13.1, Table 3, for minimum size of letters for legend and for minimum length of color field for each raceway and cable size.

1. Color: Black letters on orange field.
2. Legend: Indicates voltage and service.

B. Pretensioned, Wraparound Plastic Sleeves: Flexible, preprinted, color-coded, acrylic band sized to suit the diameter of the line it identifies and arranged to stay in place by pretensioned gripping action when placed in position.

C. Underground-Line Warning Tape: Permanent, bright-colored, continuous-printed, vinyl tape.

1. Not less than 6 inches wide by 4 mils thick
2. Compounded for permanent direct-burial service.
3. Embedded continuous metallic strip or core.
4. Printed legend indicating type of underground line.

D. Wrap Around Cable Markers: Black, non-smear legends on white background with plastic coated cloth material which remains flexible. Strong adhesive shall assure firm bond on wire.

2.2 NAMEPLATES AND SIGNS:

A. Safety Signs: Comply with 29 CFR, Chapter XVII, Part 1910.145.

B. Engraved Plastic Nameplates and Signs: Engraving stock, melamine plastic laminate, minimum 1/16 inch thick for signs up to 20 sq. in. and 1/8 inch thick for larger sizes.

1. Engraved legend with white letters on black face.
2. Punched or drilled for mechanical fasteners.

C. Exterior, reversed engraved and double laminated: Weather-resistant, nonfading, preprinted with colors, legend, and size required for the application.

D. Fasteners for Nameplates and Signs: Self-tapping, stainless-steel screws or No. 10/32, stainless-steel machine screws with nuts and flat and lock washers.

2.3 MISCELLANEOUS IDENTIFICATION PRODUCTS:

A. Cable Ties: Fungus-inert, self-extinguishing, one-piece, self-locking, Type 6/6 nylon cable ties.

1. Minimum Width: 3/16 inch.
2. Tensile Strength: 50 lb minimum.
3. Temperature Range: Minus 40 to plus 80 deg F.
4. Color: According to color-coding.

PART 3 - EXECUTION

3.1 INSTALLATION:

A. Identification Materials and Devices: Install at locations for most convenient viewing without interference with operation and maintenance of equipment.

B. Lettering, Colors, and Graphics: Coordinate names, abbreviations, colors, and other designations with corresponding designations in the Contract or with those required by codes and standards. Use consistent designations throughout Project.

C. Sequence of Work: If identification is applied to surfaces that require finish, install identification after completing finish work.

D. Color Banding Raceways and Exposed Cables: Band exposed and accessible raceways of the systems listed below:

1. Bands: Pretensioned, wraparound plastic sleeves; colored adhesive tape; or a combination of both. Make each color band 2 inches wide, completely encircling conduit, and place adjacent bands of two-color markings in contact, side by side.
2. Band Locations: At changes in direction, at penetrations of walls and floors, at 25-foot maximum intervals in straight runs, and at 10-foot maximum intervals in congested areas.
3. Apply the following colors to the systems listed below:

   a. Telecommunication System: Green or yellow.

E. Paths of Underground Electrical Lines: During trench backfilling, for exterior underground power, control, signal, and communication lines, install continuous underground plastic line marker located directly above line at 6 to 8 inches below finished grade. Where width of multiple lines installed in a common trench or concrete envelope does not exceed 16 inches overall, use a single line marker.

F. Tape shall have lettering at least 1-inch high with not less than the following identification on the tape: "CAUTION BURIED ELECTRIC LINE BELOW".

G. Secondary Service, Feeder, and Branch-Circuit Conductors: Color-code throughout the secondary electrical system.

208/120 Volt		240/120 Volt	
Phase A	Black	Phase A	Black
Phase B	Red	Phase B	Red
Phase C	Blue		
Neutral	White	Neutral	White
Ground	Green	Ground	Green

2. Factory apply color the entire length of conductors. Field-applied, color-coding methods may be used instead of factory-coded wire for sizes larger than No. 10 AWG:

   a. Colored, pressure-sensitive plastic tape in half-lapped turns for a distance of 6 inches from terminal points and in boxes where splices or taps are made. Apply last two turns of tape with no tension to prevent possible unwinding. Use 1-inch- wide tape in colors specified. Adjust tape bands to avoid obscuring cable identification markings.
   b. Colored cable ties applied in groups of three ties of specified color to each wire at each terminal or splice point starting 3 inches from the terminal and spaced 3 inches apart. Apply with a special tool or pliers, tighten to a snug fit, and cut off excess length.

H. Apply identification to conductors as follows:

1. Multiple Power or Lighting Circuits in the Same Enclosure: Identify each conductor with source, voltage, circuit number, and phase. Use color-coding to identify circuits' voltage and phase.
2. Multiple Control and Communication Circuits in the Same Enclosure: Identify each conductor by its system and circuit designation. Use a consistent system of tags, color-coding, or cable marking tape.

I. Apply identification to junction boxes including voltage, circuit number, and phase of enclosed circuits. Apply warning, caution, and instruction signs as follows:

1. Warnings, Cautions, and Instructions: Install to ensure safe operation and maintenance of electrical systems and of items to which they connect. Install engraved plastic-laminated instruction signs with approved legend where instructions are needed for system or equipment operation. Install metal-backed butyrate signs for outdoor items.
2. Emergency Operation: Install engraved laminated signs with white legend on red background with minimum 3/8-inch high lettering for emergency instructions on power transfer, load shedding, and other emergency operations.

J. Equipment Identification Labels: Engraved plastic laminate. Install on each unit of equipment, including central or master unit of each system. This includes power, lighting, communication, signal, and alarm systems, unless units are specified with their own self-explanatory identification. Unless otherwise indicated, provide a single line of text with 1/2-inch- high lettering on 1-1/2-inch- high label; where two lines of text are required, use labels 2 inches high. Use white lettering on black field. Apply labels for each unit of the following categories of equipment using mechanical fasteners:

1. Panelboards, electrical cabinets, and enclosures.
2. Access doors and panels for concealed electrical items.
3. Emergency system boxes and enclosures.

4. Disconnect switches.
5. Enclosed circuit breakers.
6. Motor starters.
7. Push-button stations.
8. Contactors.
9. Control devices.
10. Power-generating units.
11. Telecommunications equipment.
12. Main disconnect.

END OF SECTION 260553

SECTION 262416 - PANELBOARDS

PART 1 - GENERAL

1.1 SUMMARY:

A. This Section includes lighting and power panelboards and associated auxiliary equipment rated 600 V and less.

B. Related CSI Sections include the following:

1. Division 26 Section 260553, "Identification for Electrical Systems" for labeling materials.

1.2 SUBMITTALS:

A. Submit the following in accordance with Form 817 Article 1.20 – 1.05.02 and NOTICE TO CONTRACTOR – SUBMITTALS.

B. Product Data: For each type of panelboard, accessory item, and component specified.

1. Spare Parts: Include name, address, and telephone number of in-state supplier of spare parts. No out-of-state suppliers shall be permitted.

C. Shop Drawings: For panelboards. Include dimensioned plans, sections, and elevations. Show tabulations of installed devices, major features, and voltage rating. Include the following:

1. Enclosure type with details for types other than NEMA 250, Type 1.
2. Bus configuration and current ratings.
3. Short-circuit current rating of panelboard.
4. Features, characteristics, ratings, and factory settings of individual protective devices and auxiliary components.
5. Wiring Diagrams: Details of schematic diagram including control wiring and differentiating between manufacturer-installed and field-installed wiring.
6. Shunt trip main breaker information.

D. Quality Assurance Submittals:

1. Qualification Data: For firms and persons specified in Part 1.4, “Quality Assurance.”
2. Panelboard Schedules: For installation in panelboards. Submit final versions after load balancing.

E. Maintenance Data: For panelboard components to include in the operational and maintenance manuals specified in Article 1.20 – 1.08.14 subsection 2 and described in NOTICE TO CONTRACTOR – CLOSEOUT DOCUMENTS. Include manufacturer's written instructions for testing circuit breakers.

1.3 QUALITY ASSURANCE:

A. Testing shall be performed by an independent testing agency.

B. Listing and Labeling: Provide products specified in this Section that are listed and labeled.

1. The Terms “Listed” and “Labeled”: As defined in the NEC, Article 100.
2. Comply with NFPA 70.
3. Comply with NEMA PB 1.

1.4 COORDINATION:

A. Coordinate layout and installation of panelboards and components with other construction that penetrates walls or is supported by them, including electrical and other types of equipment, raceways, piping, and encumbrances to workspace clearance requirements.

1.5 SPARE PARTS:

A. Furnish to the Engineer spare parts described below that match products installed and that are packaged with protective covering for storage and identified with labels described contents.

1. Keys: 6 spares of each type for new panelboard cabinet lock.

PART 2 - PRODUCTS

2.1 MANUFACTURERS:

A. Available Manufacturers: Subject to compliance with requirements, manufacturers offering products that may be incorporated into the Work include, but are not limited to, the following:

1. Siemens Energy & Automation, Inc.
2. Eaton Corp.; Westinghouse & Cutler-Hammer Products.
3. General Electric Co.; Electrical Distribution & Control Div.
4. Square D Co.

2.2 PANELBOARD FABRICATION:

A. Enclosures: Flush- or surface-mounted cabinets as indicated. NEMA PB 1, Type 1, unless otherwise indicated to meet environmental conditions at installed location.

1. Outdoor Locations: NEMA 250, Type 3R.

B. Directory Frame: Metal, mounted inside each panelboard door.

C. Bus: Hard drawn copper of 98 percent conductivity.

D. Equipment Ground Bus: Adequate for feeder and branch-circuit equipment ground conductors. Bonded to box.

2.3 LIGHTING AND APPLIANCE BRANCH-CIRCUIT PANELBOARDS:

A. Branch Overcurrent Protective Devices: Bolt-on circuit breakers, replaceable without disturbing adjacent units.

B. Doors: In panelboard front, with concealed hinges. Secure with flush catch and tumbler lock, all keyed alike.

2.4 OVERCURRENT PROTECTIVE DEVICES:

A. Molded-Case Circuit Breaker: NEMA AB 1, handle lockable.

1. Characteristics: Frame size, trip rating, number of poles, and auxiliary devices as indicated and interrupting capacity rating to meet available fault current.
2. Application Listing: Appropriate for application, including Type SWD for switching fluorescent lighting loads and Type HACR for heating, air-conditioning, and refrigerating equipment.
3. Circuit Breakers, 200 A and Larger: Trip units interchangeable within frame size.
4. Circuit Breakers, 400 A and Larger: Field-adjustable short-time and continuous current settings.
5. Current-Limiting Trips: Where indicated, let-through ratings less than NEMA FU 1, Class RK-5.
6. Current Limiters: Where indicated, integral fuse listed for circuit breaker.
7. Lugs: Mechanical lugs and power-distribution connectors for number, size, and material of conductors indicated.
8. Shunt Trip: Where indicated.

B. Fusible Switch: NEMA KS 1, Type HD, clips to accommodate specified fuses, handle lockable.

2.5 ACCESSORY COMPONENTS AND FEATURES:

A. Accessory Set: Include tools and miscellaneous items as required for overcurrent protective device test, inspection, maintenance, and operation.

B. Portable Test Set: Arranged to permit testing of functions of solid-state trip devices without removal from panelboard.

PART 3 - EXECUTION

3.1 INSTALLATION:

A. Install panelboards and accessory items according to NEMA PB 1.1.

B. Mounting Heights: 48 inches above finished floor, measured to the center of the panelboard, or as shown on Contract plans.

C. Mounting: Plumb and rigid without distortion of box. Mount flush panelboards uniformly flush with wall finish.

D. Circuit Directory: Type directory to indicate installed circuit loads after balancing panelboard loads. Obtain approval before installing.

E. Install filler plates in unused spaces.

F. Provision for Future Circuits at Flush Panelboards: Stub four 1-inch (27-GRC) empty conduits from panelboard into accessible ceiling space or space designated to be ceiling space in the future. Stub four 1-inch (27-GRC) empty conduits into raised floor space or below slab not on grade.

G. Wiring in Panelboard Gutters: Arrange conductors into groups, and bundle and wrap with wire ties after completing load balancing.

3.2 IDENTIFICATION:

A. Identify field-installed wiring and components and provide warning signs as specified in CSI Division 26 Section 260553, "Identification for Electrical Systems."

B. Panelboard Nameplates: Label each panelboard with engraved laminated-plastic or metal nameplates mounted with corrosion-resistant screws.

3.3 GROUNDING:

A. Make equipment grounding connections for panelboards as specified in CSI Division 26, Section 260526, "Grounding and Bonding for Electrical Systems."

3.4 CONNECTIONS:

A. Tighten electrical connectors and terminals, including grounding connections, according to manufacturer's published torque-tightening values. Where manufacturer's torque values are not indicated, use those specified in UL 486A and UL 486B.

3.5 FIELD QUALITY CONTROL:

A. Prepare for acceptance tests as follows:

1. Engage a qualified independent testing agency to perform tests and inspections.
2. Make insulation-resistance tests of each panelboard bus, component, and connecting supply, feeder, and control circuits.
3. Make continuity tests of each circuit.

B. Testing: After installing panelboards and after electrical circuitry has been energized, demonstrate product capability and compliance with requirements.

1. Procedures Perform each visual and mechanical inspection and electrical test stated in NETA ATS, Section 7.5 for switches and Section 7.6 for molded-case circuit breakers or as specified by the manufacturer. Certify compliance with test parameters.
2. Correct malfunctioning units on-site, where possible, and retest to demonstrate compliance; otherwise, remove and replace with new units, and retest.

C. Balancing Loads: Contractor shall maintain 20 percent between phase loads within each panelboard during installation, or maintain panel layout according to plans.

3.6 CLEANING:

A. On completion of installation, inspect interior and exterior of panelboards. Remove paint splatters and other spots, dirt, and debris. Touch up scratches and mars of finish to match original finish.

END OF SECTION 262416

SECTION 262713 - ELECTRICITY METERING

PART 1 - GENERAL.

1.1 SUMMARY:

A. This Section includes electricity-metering components and coordination with electrical utilities.

1.2 SUBMITTALS:

A. Submit the following in accordance with Form 817 Article 1.20-1.05.02 and NOTICE TO CONTRACTOR SUBMITTALS.

B. Product Data:

1. For each type of meter socket.
2. For meter socket infrastructure components.

C. Shop Drawings for Electricity-Metering Equipment:

1. Dimensioned plans and sections or elevation layouts.
2. Wiring Diagrams: Power, signal, and control wiring specific to this Project. Identify terminals and wiring designations and color codes to facilitate installation, operation, and maintenance. Indicate recommended types, wire sizes, and circuiting arrangements for field-installed wiring, and show circuit protection features.
3. Mounting and anchoring devices recommended by manufacturer to resist seismic forces.

1.3 FIELD CONDITIONS

A. Interruption of Existing Electrical Service: Do not interrupt electrical service to facilities occupied by personnel unless permitted under the following limitations of operations:

1. Form 817 Article 1.20-1.08.04.

1.4 QUALITY ASSURANCE

A. Source Limitations: Obtain main disconnect switch, overcurrent protective devices, components, and accessories from single source from single manufacturer.

B. Product Selection for Restricted Space: Drawings indicate maximum dimensions for main disconnect switch including clearances between main disconnect switch and adjacent surfaces and other items. Comply with indicated maximum dimensions.

C. Electrical Components, Devices, and Accessories: Listed and labeled as defined in NFPA 70, by a qualified testing agency, and marked for intended location and application.

D. Comply with NEMA PB 1.

1.5 DELIVERY, STORAGE, AND HANDLING:

A. Receive, store, and handle modular meter center as specified in NECA 400.

1.6 COORDINATION:

A. Coordinate electrical service connections to components furnished by utility companies.

1. Coordinate installation and connection of exterior underground utilities and services, including provision for electricity-metering components.
2. Comply with requirements of authorities having jurisdiction and of utility company providing electrical power and other services.
3. Coordinate the installation of new service by minimizing the power outage to the existing service.

B. Coordinate location of access panels and doors for electrical items that are concealed by finished surfaces.

Electrical Service: Eversource shall install conductors from pole #5840 to the meter socket. Location of the pole is indicated on the plans or as determined by the utility company. All conduits and pull strings, secondary service, grounding, meter socket and associated conduit shall be supplied and installed by the Contractor. The utility company shall supply the meter. The Eversource charge of $900 shall be included in the contract bid price. This amount also includes the service connections to the facility by the utility company.

C. All bidders will include the above amounts in Item No. 1700001A – Service Connections (Estimated Cost) along with costs for work by other utilities.

D. The Contractor shall call “Call Before You Dig!” at 811 or (800) 922-4455, before any excavation takes place. Contractor shall coordinate excavation with paving operation.

PART 2 - PRODUCTS

2.1 EQUIPMENT FOR ELECTRICITY METERING :

A. Current-Transformer Cabinets: Comply with requirements of electrical power utility company.

B. Meter Sockets:

1. Comply with requirements of electrical power utility company.
2. Meter Sockets: Steady-state and short-circuit current ratings shall meet indicated circuit ratings.

C. Modular Meter Center: Factory-coordinated assembly of a main service, terminal box with lugs only, disconnect device, wireways, meter socket modules. Assembly shall be complete with interconnecting buses and other features as specified below. All buses shall be made of 98 % conductivity copper.

1. Available Manufacturers: Subject to compliance with requirements, manufacturers offering products that may be incorporated into the Work include, but are not limited to, the following.

a. Cutler-Hammer; Eaton Corporation.
b. General Electric Company; Electrical Distribution & Control Div.
c. Siemens Energy & Automation, Inc.
d. Square D; Schneider Electric.

2. Housing: NEMA 250, Type 1 or 3R enclosure, depending on the location.

a. Structural strength of the housing, its anchorage and component attachment provisions, and anchorage devices recommended for anchoring the housing in place shall be adequate to prevent separation of equipment and its components from their installed positions.

3. Minimum Short-Circuit Rating: 22,000 amperes symmetrical at rated voltage.
4. Main Disconnect Device: Circuit breaker, fully rated for use with downstream feeder and branch circuit breakers
5. Feeder Circuit Breakers: Molded case units, rated to protect circuit breakers.

a. Identification: Complying with CSI Division 26 Section 260553, "Identification for Electrical Systems."
b. Physical Protection: Tamper resistant, with hasp for padlock.

6. Meter Socket: Type as approved by utility company, with rating coordinated with indicated feeder circuit rating.

PART 3 - EXECUTION

3.1 ELECTRICAL EQUIPMENT INSTALLATION:

A. Headroom Maintenance: If mounting heights or other location criteria are not indicated, arrange and install components and equipment to provide the maximum possible headroom.

B. Materials and Components: Install level, plumb, and parallel and perpendicular to other building systems and components, unless otherwise indicated.

C. Equipment: Install to facilitate service, maintenance, and repair or replacement of components. Connect for ease of disconnecting, with minimum interference with other installations.

D. Right of Way: Give to raceways and piping systems installed at a required slope.

3.2 ELECTRICAL SUPPORTING DEVICE APPLICATION:

A. Damp Locations and Outdoors: Hot-dip galvanized materials or nonmetallic, U-channel system components.

B. Dry Locations: Hot-dip galvanized materials.

C. Support Clamps for RGSC and PVC Raceways: Click-type clamp system.

D. Selection of Supports: Comply with manufacturer's written instructions.

E. Strength of Supports: Adequate to carry present and future loads, times a safety factor of at least four; minimum of 200-lb design load.

3.3 SUPPORT INSTALLATION:

A. Install supports devices to securely and permanently fasten and support electrical components.

B. Support individual horizontal raceways with separate, malleable-iron pipe hangers or clamps.

C. Install 1/4-inch- diameter or larger threaded steel hanger rods, unless otherwise indicated.

D. Spring-steel fasteners specifically designed for supporting single conduits or tubing may be used instead of malleable-iron hangers for 1-1/2-inch and smaller raceways

serving lighting and receptacle branch circuits above suspended ceilings and for fastening raceways to slotted channel and angle supports.

E. Arrange supports in vertical runs so the weight of raceways and enclosed conductors is carried entirely by raceway supports, with no weight load on raceway terminals.

F. Simultaneously install vertical conductor supports with conductors.

G. Separately support cast boxes that are threaded to raceways and used for fixture support. Support sheet-metal boxes directly from the building structure or by bar hangers. If bar hangers are used, attach bar to raceways on opposite sides of the box and support the raceway with an approved fastener not more than 24 inches from the box.

H. Install metal channel racks for mounting cabinets, panelboards, disconnect switches, control enclosures, pull and junction boxes, and other devices unless components are mounted directly to structural elements of adequate strength.

I. Install sleeves for cable and raceway penetrations of concrete slabs and walls unless core-drilled holes are used. Install sleeves for cable and raceway penetrations of masonry and fire-rated gypsum walls and of all other fire-rated floor and wall assemblies. Install sleeves during erection of concrete and masonry walls.

J. Securely fasten electrical items and their supports to the building structure, unless otherwise indicated. Perform fastening according to the following unless other fastening methods are indicated:

1. Wood: Fasten with wood screws or screw-type nails.
2. Masonry: Toggle bolts on hollow masonry units and expansion bolts on solid masonry units.
3. New Concrete: Concrete inserts with machine screws and bolts.
4. Steel: Welded threaded studs or spring-tension clamps on steel.
5. Welding to steel structure may be used only for threaded studs, not for conduits, pipe straps, or other items.
6. Light Steel: Sheet-metal screws.
7. Fasteners: Select so the load applied to each fastener does not exceed 25 percent of its proof-test load.

3.4 UTILITY COMPANY ELECTRICITY-METERING EQUIPMENT:

A. Install equipment according to utility company's written requirements. Provide grounding, empty conduits, and pullwire as required by utility company. Contractor shall only run conduit under slab of building for conduits penetrating the building and routed from the outside. Conduits within the building shall not be run in slab unless otherwise indicated.

B. Metering enclosure per Electric Utilities' specifications. The meter is to be located outside the building wall within 50 feet of the main switch.

C. All service entrance equipment including the appropriate size and type of conduit and service entrance conductors per the NEC and local authority having jurisdiction.

3.5 FIELD QUALITY CONTROL:

A. Testing: After installing main switch disconnect and after electrical circuitry has been energized, demonstrate product capability and compliance with requirements.

1. Procedures: Perform each visual and mechanical inspection and electrical test stated in NETA ATS, Section 7.5 for switches and Section 7.6 for molded-case circuit breakers or per manufacturer's written testing instructions. Certify compliance with test parameters.
2. Correct malfunctioning units on-site, where possible, and retest to demonstrate compliance; otherwise, remove and replace with new units, and retest.

B. Main Disconnect Switch will be considered defective if they do not pass tests and inspections.

3.6 CLEANING:

A. On completion of installation, inspect interior and exterior of panelboards. Remove paint splatters and other spots, dirt, and debris. Touch up scratches and mars of finish to match original finish.

END OF SECTION 262713

SECTION 262726 - WIRING DEVICES

PART 1 - GENERAL

1.1 SUMMARY:

A. This Section includes the following:

1. Receptacles
2. Ground Fault Circuit Interrupter Receptacles
3. Snap Switches
4. Wall Plates

B. Related CSI Sections include the following:

1. Division 26 Section 260519, "Low-Voltage Electrical Power Conductors and Cables"
2. Division 26 Section 260533, "Raceways and Boxes for Electrical Systems"

1.2 SUBMITTALS:

A. Submit the following in accordance with Form 817 Article 1.20 – 1.05.02 and NOTICE TO CONTRACTOR – SUBMITTALS.

B. Product Data: For receptacles, GFCI receptacles, plugs, snap switches and wall plates.

1.3 QUALITY ASSURANCE:

A. Comply with NFPA 70.

B. UL and NEMA Compliance: Provide wiring devices which are listed and labeled by UL and comply with applicable UL and NEMA standards.

1.4 SEQUENCE AND SCHEDULING:

A. Schedule installation of finish plates after the surface upon which they are installed has received final finish.

PART 2 - PRODUCTS

2.1 WIRING DEVICES:

A. General: Provide specification grade wiring devices, in types, characteristics, colors, and electrical ratings for applications indicated which are UL listed and which comply with NEMA WD 1 and other applicable UL and NEMA standards.

1. General: Wiring devices include receptacles, switches and special outlets installed in raceway or conduit boxes, complete with cover plates. Devices shall conform to NEMA WD-1 and shall be UL approved.
2. All devices of a given type and all finished device plates shall be the products of a single manufacturer.
3. Plugs of types to match the associated receptacle shall be provided with each item of portable equipment as specified in other sections. In addition, are spare plugs to match each special receptacle as herein after specified shall be furnished.
4. Explosion-proof devices shall be provided in hazardous areas such as paint storerooms, and other hazardous areas as indicated on the plans.

B. Enclosures: NEMA Type 1 for Maintenance Facility or as indicated on plans

C. Switches:

1. AC tumbler-toggle switches: Meeting minimum requirements of UL 20 and further requirements herein specified and of specification grade, heavy duty, of the type indicated on the plans.

a. Provide switches that operate in any position and are fully enclosed cup type with entire body and cover of molded phenolic, urea or melamine. Do not use fiber, paper or similar insulating material for body or cover.
b. Equip switches with metal mounting yoke with plaster ears, insulating from the mechanism and fastened to the switch body by bolts, screws, rivets or other substantial means that meet test requirements.
c. Provide a green-colored equipment grounding screw on the yoke.
d. Provide the section of yoke normally intended to bear on the surface outside the box with a minimum overall dimension of 3/4 inch, measured at right angles to the longitudinal axis of the yoke.
e. Make switch contacts between silver or silver alloys.
f. Switches shall be side wired with terminal of screw or combination screw-clamp type. Provide access holes for back wiring.

g. Wiring terminals capable of receiving and holding proper wire sizes as shown below:

Switch Rating	Wire Size, AWG No.
20 amperes	12
30 amperes	10

2. Switches for Heavy Duty: Unless specified otherwise, use standard tumble-toggle switches of the AC single unit, toggle type, heavy duty, general use snap switches in accordance with NEMA WD 1 for heavy duty general use type.
3. Switches for Use on Incandescent, Fluorescent, Metal Halide, or High Pressure Sodium Lighting Circuits: Fully rated 20 or 30 amperes at 120 or 277 volts, as indicated on the plans. Actual connected lamp wattage not to exceed the following:

Switch Rating 120 and 277 Volts	Maximum Wattage Allowed
20 amperes	1,400
30 amperes	2,400

4. Switches for Power Equipment: Switches controlling outlets other than lighting, such as motors less than 1/4 horsepower, may be specification grade, flush type, AC/DC contacts rated ten amperes, 125 volts. Switches controlling straight resistance loads may be snap switches as specified herein, of the proper rating up to 30 amperes at 120-240 volts. Switches used for controlling motors shall be rated for at least the horsepower of the motor controlled.
5. Available Manufacturers: Subject to compliance with requirements, manufacturers offering products which may be incorporated in the work include, but are not limited to, the following:

   a. Arrow-Hart Division, Crouse-Hinds Company.
   b. Bryant Electric Company.
   c. Hubbell, Inc.
   d. General Electric.
   e. Pass and Seymour.
   f. Leviton

D. Receptacles and Plugs:

1. General Use: Grounding duplex type, conforming to NEMA WD-1, configuration 5-20R. Bodies shall be of thermosetting plastic supported on a metal mounting strap. Wiring terminals shall be of the screw type, back or side wired.
2. Ground Fault Interrupter Receptacle: NEMA Designation 5-20R, duplex, three wire, 20 amperes, 125 volt, ground fault interrupter type with pilot light to indicate if receptacle is working or faulted (tripped). Do not arrange to protect

connected downstream receptacles on same circuit unless called for on plans or approved by Designer. Design units for installation in a 2-3/4-inch- deep outlet box without an adapter.

E. Device/Communication Plates:

1. All device plates shall be 0.040 inch minimum with struck-up beveled edges, void of sharp corners and burrs.
2. Unless otherwise noted herein and on drawings, all device plates for wall outlets and switches shall be brush satin finish stainless steel for office areas and bay areas.
3. Device plates for wall telephone outlets shall contain two openings for RJ45 Jacks. One Jack for voice and the other for data. Unless otherwise specified on the plans.
4. Device plates for exposed work shall be steel. Plates for wet locations shall be gasketed and shall have in-use covers. Device plates for the salt shed shall be the corrosive resistant type.
5. Plate for floor receptacle shall be forged brass with duplex flap type openings and specifically designed for the associated floor box.
6. Plate-Securing Screws: Metal with head color to match plate finish.

PART 3 - EXECUTION

3.1 INSTALLATION OF WIRING DEVICES AND ACCESSORIES:

A. Install wiring devices and accessories as indicated, in accordance with manufacturer's written instructions, applicable requirements of NEC and in accordance with recognized industry practices to fulfill project requirements.

B. Coordinate with other Work, including painting, electrical boxes and wiring installations, as necessary to interface installation of wiring devices with other Work.

C. Install wiring devices only in electrical boxes which are clean; free from building materials, dirt, and debris.

D. Protect devices and assemblies during painting. Install wall plates after painting work is completed.

E. Tighten connectors and terminals, including screws and bolts, in accordance with equipment manufacturer's published torque tightening values for wiring devices. Where manufacturer's torquing requirements are not indicated, tighten connectors and terminals to comply with tightening torques specified in UL Standard 486A. Use properly scaled torque indicating hand tool.

F. Switches and Receptacles: Unless otherwise indicated, mount flush, with long dimension vertical. Wall switches shall be mounted 4’ above finished floor opposite hinge side of door, 4” from door trim, and ganged under one cover where more than one switch is shown. Disconnect switches shall be mounted 5’ above finished floor and receptacles shall be mounted 24” above finished floor, and in office areas unless otherwise noted. Where finned tube radiation exists, mount receptacles 2” above finned tube radiation unless otherwise noted on plans. All wall switches and receptacles shall be flush mounted in finished areas.

3.2 PROTECTION:

A. Protect installed components from damage. Replace damaged items prior to final acceptance.

3.3 FIELD QUALITY CONTROL:

A. Testing: Prior to energizing circuits, test wiring for electrical continuity, and for short-circuits. Ensure proper polarity of connections is maintained. Subsequent to energizing, test wiring devices and demonstrate compliance with requirements, operating each operable device at least six times.

B. Test ground fault interrupter operation with both local and remote fault simulations in accordance with manufacturer recommendations.

C. Remove malfunctioning units, replace with new units, and retest as specified above.

3.4 CLEANING:

A. General: Internally clean devices, device outlet boxes, and enclosures. Replace stained or improperly painted wall plates or devices.

END OF SECTION 262726

SECTION 262813 - FUSES

PART 1 - GENERAL

1.1 SUMMARY:

A. Section Includes:

1. Fuses.

1.2 SUBMITTALS:

A. Submit the following in accordance with Form 817 Article 1.20 – 1.05.02 and NOTICE TO CONTRACTOR – SUBMITTALS.

B. Product Data: For each fuse type specified. Include the following:

1. Descriptive data and time-current curves.
2. Let-through current curves for fuses with current-limiting characteristics.
3. Coordination charts and tables and related data.

Spare Parts: Include name, address, and telephone number of in-state supplier of spare parts. No out-of-state suppliers shall be permitted.

C. Maintenance Data: For tripping devices to include in the operation and maintenance manuals specified in Form 817 Article 1.20 – 1.08.14 subsection 2 and described in NOTICE TO CONTRACTOR – CLOSEOUT DOCUMENTS.

1.3 QUALITY ASSURANCE:

A. Source Limitations: Obtain fuses from one source and by a single manufacturer.

B. Comply with NFPA 70 for components and installation.

C. Listing and Labeling: Provide fuses specified in this Section that are listed and labeled.

1. The Terms "Listed" and "Labeled": As defined in the NEC, Article 100.

1.4 SPARE PARTS:

A. Furnish to the Engineer spare parts described below that match products installed, are packaged with protective covering for storage, and are identified with labels describing contents.

1. Spare Fuses: Furnish quantity equal to 20 percent of each fuse type and size installed, but not less than 1 set of 3 of each type and size.

PART 2 - PRODUCTS

2.1 MANUFACTURERS:

A. Available Manufacturers: Subject to compliance with requirements, manufacturers offering fuses that may be incorporated into the Work include, but are not limited to, the following:

1. Cooper Industries, Inc.; Bussmann Div.
2. Eagle Electric Mfg. Co., Inc.
3. Edison Fuse, Inc.
4. General Electric Co.; Wiring Devices Div.

2.2 CARTRIDGE FUSES:

A. Characteristics: NEMA FU 1, nonrenewable cartridge fuse; class as specified or indicated; current rating as indicated; voltage rating consistent with circuit voltage.

PART 3 - EXECUTION

3.1 EXAMINATION:

A. Examine utilization equipment nameplates and installation instructions to verify proper fuse locations, sizes, and characteristics.

B. Do not proceed with installation until unsatisfactory conditions have been corrected.

3.2 FUSE APPLICATIONS:

A. Main Service: Class L, fast acting.

B. Main Feeders up to 600A: Class J, time delay.

C. Motor Branch Circuits: Class RK1, time delay.

D. Other Branch Circuits: Class RK5, non-time delay.

3.3 INSTALLATION:

A. Install fuses in fusible devices as indicated. Arrange fuses so fuse ratings are readable without removing fuse.

3.4 IDENTIFICATION:

A. Install labels complying with requirements for identification specified in CSI Division 26, Section 260553 “Identification for Electrical Systems” and indicate fuse replacement information on inside door of each fused switch and adjacent to each fuse block, socket, and holder.

END OF SECTION 262813

SECTION 262816 - ENCLOSED SWITCHES AND CIRCUIT BREAKERS

PART 1 - GENERAL

1.1 SUMMARY:

A. This Section includes individually mounted switches and circuit breakers used for the following:

1. Feeder and equipment disconnect switches
2. Feeder branch-circuit protection
3. Motor disconnect switches
4. Bolt-on circuit breakers
5. Low Voltage Dispenser Disconnect (LVDD)

B. Related Sections: The following Sections contain requirements that relate to this section:

1. CSI Division 26 Section 262726, "Wiring Devices" for attachment plugs and receptacles, and snap switches used for disconnect switches.

1.2 SUBMITTALS:

A. Submit the following in accordance with Form 817 Article 1.20 – 1.05.02 and NOTICE TO CONTRACTOR – SUBMITTALS.

B. Product Data for switches, circuit breakers, and accessories specified in this section include the following:

1. Descriptive data and time-current curves.
2. Let-through current curves for circuit breakers with current-limiting characteristics.
3. Coordination charts and tables and related data.
4. Wiring diagrams detailing wiring for power and control systems and differentiating between manufacturer-installed and field-installed wiring.

Spare Parts: Include name, address, and telephone number of in-state supplier of spare parts. No out-of-state suppliers shall be permitted.

C. Quality Assurance Submittals:

1. Qualification data for firms and persons specified in Part 1.3 "Quality Assurance" to demonstrate their capabilities and experience. Include lists of

completed projects with project names and addresses, names and addresses of architects and owners, and other information specified.

D. Maintenance Data: For tripping devices to include in the operation and maintenance manuals specified in Form 817 Article 1.20 – 1.08.14 subsection 2 and described in NOTICE TO CONTRACTOR – CLOSEOUT DOCUMENTS.

1.3 QUALITY ASSURANCE:

A. Testing Agency Qualifications: The independent testing agency shall meet OSHA criteria for accreditation of testing laboratories, Title 29, Part 1907, or shall be a full member company of NETA.

1. Testing Agency's Field Supervisor: Person currently certified by NETA or the NICET, to supervise on-site testing specified in Part 3.

B. Source Limitations: Obtain disconnect switches and circuit breakers from one source and by a single manufacturer.

C. Comply with NFPA 70 for components and installation.

D. Listing and Labeling: Provide disconnect switches and circuit breakers specified in this Section that are listed and labeled.

1. The Terms "Listed" and "Labeled": As defined in the NEC, Article 100.

1.4 COORDINATION:

A. Coordinate layout and installation of switches, circuit breakers, and components with other construction, including conduit, piping, equipment, and adjacent surfaces. Maintain required workspace clearances and required clearances for equipment access doors and panels.

B. Coordinate the installation of new bolt-on circuit breakers and main circuit breakers with existing panels. Match existing breakers including breaker manufacturer and short circuit rating.

PART 2 - PRODUCTS

2.1 MANUFACTURERS:

A. Available Manufacturers: Subject to compliance with requirements, manufacturers offering disconnect switches and circuit breakers that may be incorporated into the work include, but are not limited to, the following:

1. Fusible Switches and Nonfusible Switches:

a. Eaton Corp.; Cutler-Hammer Products
b. General Electric Co.; Electrical Distribution and Control Division
c. General Switch Corp.
d. Siemens Energy & Automation, Inc.
e. Square D Co.
f. Westinghouse Electric Corp.; Distribution & Control Business Unit

2. Molded-Case Circuit Breakers:

a. American Circuit Breaker Corp.
b. Eaton Corp.; Cutler-Hammer Products
c. General Electric Co.; Electrical Distribution and Control Division
d. General Switch Corp.
e. Klockner-Moeller
f. Siemens Energy & Automation, Inc.
g. Square D Co.
h. Westinghouse Electric Corp.; Distribution & Control Business Unit

3. Combination Circuit Breaker and Ground Fault Trip:

a. American Circuit Breaker Corp.
b. General Electric Co.; Electrical Distribution and Control Division
c. Siemens Energy & Automation, Inc.
d. Square D Co.
e. Westinghouse Electric Corp.; Distribution & Control Business Unit

4. Molded-Case, Current-Limiting Circuit Breakers:

a. General Electric Co.; Electrical Distribution and Control Division
b. Siemens Energy & Automation, Inc.
c. Square D Co.
d. Westinghouse Electric Corp.; Distribution & Control Business Unit

5. Integrally Fused, Molded-Case Circuit Breakers

a. General Electric Co.; Electrical Distribution and Control Division
b. Siemens Energy & Automation, Inc.
c. Westinghouse Electric Corp.; Distribution & Control Business Unit.

6. Bolt-on circuit breakers

a. Square D. Co.
b. General Electric Co.

7. Low Voltage dispenser Disconnect (LVDD)
a. Square D-Co.
b. Power Integrity Corporation or approved equal.

2.2 DISCONNECT SWITCHES:

A. Low Voltage Dispenser Disconnect (LVDD):

1. Outdoor Location: Type 3R.
2. Other Wet or Damp Indoor Locations: Type 4.
3. Lockable cover.
4. Compliance to NFPA 30A Section 6.7 and NEC Sections 514.11 and 514.13.

B. Enclosed, Nonfusible Switch: NEMA KS 1, Type HD, with lockable handle.

C. Enclosed, Fusible Switch, 800 A and Smaller: NEMA KS 1, Type HD, clips to accommodate specified fuses, enclosure consistent with environment where located, handle lockable with 2 padlocks, and interlocked with cover in CLOSED position.

D. Enclosure: NEMA KS 1, Type 1, unless otherwise specified or required to meet environmental conditions of the installed location.

1. Outdoor Locations: Type 3R.
2. Other Wet or Damp Indoor Locations: Type 4.
3. Hazardous Areas Indicated on Drawings: Type 7C.

2.3 ENCLOSED CIRCUIT BREAKERS:

A. Enclosed, Molded-Case Circuit Breaker: NEMA AB 1, with lockable handle.

B. Characteristics: Frame size, trip rating, number of poles, and auxiliary devices as indicated and interrupting rating to meet available fault current.

C. Application Listing: Appropriate for application, including switching fluorescent lighting loads or heating, air-conditioning, and refrigerating equipment.

D. Circuit Breakers, 200 A and Larger: Trip units interchangeable within frame size.

E. Circuit Breakers, 400 A and Larger: Field-adjustable, short-time and continuous-current settings.

F. Current-Limiting Trips: Where indicated, let-through ratings less than NEMA FU 1, Class RK-5.

G. Current Limiters: Where indicated, integral fuse listed for circuit breaker.

H. Molded-Case Switch: Where indicated, molded-case circuit breaker without trip units.

I. Lugs: Mechanical lugs and power-distribution connectors for number, size, and material of conductors indicated.

J. Shunt Trip: Where indicated.

K. Accessories: As indicated.

L. Enclosure: NEMA AB 1, Type 1, unless otherwise specified or required to meet environmental conditions of installed location.

1. Outdoor Locations: Type 3R.
2. Other Wet or Damp Indoor Locations: Type 4.
3. Hazardous Areas Indicated on plans: Type 7C.

2.4 LOW VOLTAGE DISPENSER DISCONNECT (LVDD)

1. Comply with the National Electrical Code requirements for motor fuel dispensing facility disconnects Articles 514.11 and 514.13.
2. Individual switches used to isolated lower voltages for communications, data and video circuits for maintenance and servicing purposes, but are also wired into the emergency shutdown system.
3. Locking provisions for Lockout-Tagout requirements.
4. Designed, manufactured and tested under current Underwriters laboratories (UL) codes and standards.
5. UL Listed – UL 1238 Control Equipment for use with flammable liquid dispensing devices.

PART 3 - EXECUTION

3.1 INSTALLATION:

A. Install disconnect switches and circuit breakers in locations as indicated, according to manufacturer's written instructions.

B. Install disconnect switches and circuit breakers level and plumb.

C. Connect disconnect switches and circuit breakers and components to wiring system and to ground as indicated and instructed by manufacturer.

1. Tighten electrical connectors and terminals according to manufacturer's published torque-tightening values. Where manufacturer's torque values are not indicated, use those specified in UL 486A and UL 486B.

D. Identify each disconnect switch and circuit breaker according to requirements specified in CSI Division 26 Section 260553, "Identification for Electrical Systems."

E. Enclosure Nameplates: Label each enclosure with engraved metal or laminated-plastic nameplate mounted with corrosion-resistant screws

3.2 FIELD QUALITY CONTROL:

A. Testing: After installing disconnect switches and circuit breakers and after electrical circuitry has been energized, demonstrate product capability and compliance with requirements. Engage a qualified independent testing agency to perform tests and inspections.

1. Procedures: Perform each visual and mechanical inspection and electrical test stated in NETA ATS, Section 7.5 for disconnect switches and Section 7.6 for molded-case circuit breakers. Manufacturer’s recommended testing is also valid. Certify compliance with test parameters.

B. Correct malfunctioning units on-site, where possible, and retest to demonstrate compliance; otherwise, remove and replace with new units and retest.

3.3 CLEANING:

A. After completing system installation, including outlet fittings and devices, inspect exposed finish. Remove burrs, dirt, and construction debris and repair damaged finish including chips, scratches, and abrasions.

END OF SECTION 262816

SECTION 265600 - EXTERIOR LIGHTING

PART 1 - GENERAL

1.1 SUMMARY:

A. This Section includes exterior lighting fixtures, lamps, ballasts, poles, and accessories for the complete outdoor lighting as shown on plans.

B. Related CSI Sections include the following:

1. Division 26, Section 260533, “Raceways and Boxes for Electrical Systems”
2. Division 26, Section 262726, “Wiring Devices.”

C. Description:

1. The lighting system shall operate from 240/120 volts, single phase, three wire, 60 Hertz systems and 208/120 volts, single phase, three wire, 60 Hertz systems or as called for on the project plans. LED(s), complete with driver(s), shall be installed as shown on the plans.
2. Fixtures, outlets, receptacles, switches and all other applicable lighting system components and details shall be as shown on the plans or as specified.
3. The plans show the location, number, size and type of lighting units and fixture schedule. All fixtures shall be UL listed.
4. Lighting plans are diagrammatic, with fixture outlets located approximately to scale but not dimensioned. Raceways are not generally shown. The Installer shall check lighting drawings against field conditions and the drawings of other disciplines for interferences and shall select and lay out locations for outlets and obtain approval for final locations from Engineer.
5. Fixtures to be installed in wet, damp, moist, corrosive or outdoor locations will be acceptable only when designed and manufactured specifically for outdoor, rugged, weatherproof services. Each part, component, nut, bolt, rivet and spring shall be made of materials of effective corrosion resistance or have been subjected to finishing treatment which will assure such resistance. Fixtures shall be certified by manufacturer for intended purpose.

1.2 SUBMITTALS:

A. Submit the following in accordance with Form 817 Article 1.20 – 1.05.02 and NOTICE TO CONTRACTOR – SUBMITTALS.

B. Product Data: Include photometric curves, illustrations, specifications, schedules and material lists with quantities showing complete details of all proposed equipment.

C. Maintenance Data: For interior lighting to include in the operation and maintenance manuals specified in Form 817 Article 1.20-1.08-14 subsection 2 and described in NOTICE TO CONTRACTOR – CLOSEOUT DOCUMENTS.

1.3 QUALITY ASSURANCE:

A. Comply with applicable local code requirements of the authority having jurisdiction and NEC Articles 225, 250, 410, and 501 as applicable to installation, and construction of exterior building lighting fixtures.

B. Comply with requirements of UL standards, including Standards 484A and B, pertaining to exterior lighting fixtures. Provide exterior lighting fixtures and components which are UL-listed and labeled.

C. Comply with applicable requirements of NFPA 780, "Lightning Protection Code," pertaining to installation of exterior lighting fixtures.

D. Comply with ANSI C2, "National Electrical Safety Code."

1.4 SEQUENCING AND SCHEDULING:

A. Coordinate with other work including conductors and cable, raceways and boxes, to properly interface installation of interior lighting fixtures with other work.

1.5 STORAGE AND HANDLING OF POLES:

A. General: Store poles on decay-resistant treated skids at least 1 ft above grade and vegetation. Support pole to prevent distortion and arrange to provide free air circulation.

B. Metal Poles: Retain factory-applied pole wrappings until just before pole installation. For poles with nonmetallic finishes, handle with web fabric straps.

1.6 SPARE PARTS:

A. Furnish to the Engineer spare parts described below that match products installed and that are packaged with protective covering for storage and identified with labels describing contents.

1. Fifteen percent spare LED Modules, but not less than 1, of each type and size LED Module used in each fixture.
2. Fifteen percent spare LED Drivers, but not less than 1, of each type and size LED Driver used in each fixture.

1.7 WARRANTIES:

A. Refer to Form 817 Article 1.20-1.06.08 and NOTICE TO CONTRACTOR – CLOSEOUT DOCUMENTS for additional information.

B. Warranty period: 5 years from the issuance of Certificate of Compliance for LED fixture, factory-installed electrical component system; a minimum of two years for other luminaire components. The warranty shall cover both parts and labor for the complete warranty period.

C. Replace defective and burned out LED modules for a period of one year following the date of Certificate of Compliance.

PART 2 - PRODUCTS

2.1 MANUFACTURERS:

A. Available Manufacturers: Subject to compliance with CDOT Maintenance requirements, lighting manufacturers offering products that may be incorporated in the work are the following or an approved equal:

1. Holophane
2. Lithonia
3. Hubbell
4. RAB

B. Available Manufacturers: Subject to compliance with CDOT Maintenance requirements, LED manufacturers offering products that may be incorporated in the work are the following or an approved equal:

1. Cree Inc.

2. Nichia
3. Osram Opto Semiconductors

2.2 MATERIALS:

A. General: Lighting fixtures (luminaires) shall be complete with drivers, mounting brackets and hardware, LED modules, installation accessories, fixture wire, and all accessories as required, as specified in the Fixture Schedule, as shown on the Contract plans and as required by NEC.

B. Lighting Fixtures: The specified manufacturers and catalog numbers are consistent with lighting fixtures currently utilized at other CDOT facilities.

C. Drivers: Light engine(s) configurations consist of high-efficacy LEDs mounted to metal-core circuit boards to maximize heat dissipation and promote long life. Class 1 electronic drivers shall be designed to have a power factor >90%, THD <20%, and an expected life of 100,000 hours with <1% failure rate. Easily serviceable 10kV or 6kV surge protection device meeting a minimum Category C Low operation (per ANSI/IEEE C62.41.2).

D. Refractors and Reflectors: All glassware and plastic shall be uniform, free from defects and photometrically tested for distribution by an independent testing laboratory. Plastic diffusers shall be of new virgin-acrylic plastic material. Designer reserves the right to review photometric test.

E. Conduits: Conduit, including hangers and fittings, shall be installed where shown on the Contract plans and shall be in accordance with CSI Division 26 Section 260533, "Raceways & Boxes for Electrical Systems."

F. Temporary Fuel Luminaire

1. Type “L1” Dust-To-Dawn LED floodlight with two (2) tool-free adjustable heads. Cast aluminum, corrosion-resistant housing. Clear acrylic lenses, fully gasketed. Input 20W, 4500K color temperature.

G. Fuel Island Luminaire

1. Type “L2” fixture housings shall be constructed from single-piece die-cast aluminum housing with integral heat sink fins to optimize thermal management through conductive and convective cooling. Modular design to allow for ease of maintenance and future light engine upgrades. The LED driver shall be mounted in direct contact with the casting to promote low operating temperature and long life.

Housing shall be completely sealed against moisture and environmental contaminants (IP66). Low EPA (0.8 ft^2) for optimized pole wind loading. Basis of design: Lithonia Lighting D-Series Size 0 LED Area Luminaire or approved equal, equipped with a long life LED twist-lock photocell. Provide one photocell for each light fixture. The Contractor shall submit a complete light analysis if a different manufacturer is used.

2. Type "L2" fixture exterior parts shall be protected by a zinc-infused Super Durable TGIC thermoset powder coat finish to provide resistance to corrosion and weathering.

2.3 FIXTURE SUPPORT COMPONENTS:

A. Wind-Load Strength: 110 MPH with 1.3 Gust Factor; for total support assembly, including pole, base, and anchorage, where used, to carry the fixtures, supports, and appurtenances at the indicated heights above grade without deflection or whipping.

B. Mountings, Fastenings, and Appurtenances:

1. Corrosion-resistant components compatible with the poles and fixtures that will not cause galvanic action at contact points. Provide mountings that will correctly position the luminaire to provide the indicated light distribution.

C. Pole Shaft: Square Straight Steel, one piece construction, tenon and, base cover standard square, Gasketed hand-hole cover, Lektrocote finish standard.

D. Pole Bases: per manufacturer.

E. Poles: Galvanized Square Steel. Basis of design: Lithonia's Catalog No. SSS-16-5G-DM28-DDB or approved equal.

F. Metal Pole Grounding Provisions: Ground lug connected to a ¾", 10' long copper ground rod with a #6 AWG conductor.

G. Pole-Top: Fabricated to support the fixtures indicated and securely fastened to the pole top.

H. Finish: Dark Bronze

I. Wind Rating: 110 MPH with 1.3 Gust Factor

J. Bolt Circle: Per Manufacturer’s Recommendation

K. Foundation: Per plan detail. Bolt circle per pole manufacturer recommendation.

L. Anchor bolts: Galvanized “J” bolt, template included (4-bolt design), sized in accordance with pole manufacturer’s recommendation. Pole shall be rated to withstand 110 MPH winds and a 1.3 gust factor.

2.4 LAMPS:

A. LED’s, (Type L1) multi-chip, high-output, long life.

B. LED’s (Type L2) forward optics, 40-LED’s (2-engines).

2.5 FINISH:

A. Metal Parts: Manufacturer's standard finish except as otherwise indicated. For fixtures mounted on poles, match finish of poles and luminaire fixtures. Finish applied over corrosion-resistant primer, free of streaks, runs, holidays, stains, blisters, and similar defects. Remove poles, fixtures, and accessories showing evidence of corrosion or finish failure during Project warranty period and replace with new items.

B. Other Parts: Manufacturer's standard finish except as otherwise indicated.

PART 3 - EXECUTION

3.1 EXAMINATION:

A. Examine areas and conditions under which lighting fixtures are to be installed, and substrate for supporting lighting fixtures. Notify Engineer in writing of conditions detrimental to proper completion of the work. Do not proceed with work until unsatisfactory conditions have been corrected in manner acceptable to Installer and with approval of Engineer.

3.2 INSTALLATION:

A. Install all luminaires, lamps and associated supports, fittings, conduit, boxes, wiring and grounding conductors as called for in this section, as shown on the plans, as required and in accordance with the manufacturer's instructions and recommendations.

B. Prior to the issuance of the Certificate of Compliance, thoroughly clean the luminaires, lamps and accessories and shall replace all lamps which were used for a period equivalent to 50 percent or more of their rated life, at no additional cost.

C. All fixtures shall be aligned and directed as shown or so as to illuminate the desired area properly. Fixtures shall be directly and rigidly mounted on their supporting structures using bolted connections. The conduit system shall not be used to support fixtures unless called for.

D. Where aluminum contacts concrete or dissimilar metal, separate contact surfaces with gasket, non-absorptive tape or bituminous coating to prevent corrosion. Use stainless steel fasteners.

E. Fixtures shall be mounted plumb, level and in straight lines. Rows of fixtures shall be installed accurately as to line and level. Fastenings and supports shall be firmly set so that the fixtures will not be distorted by handling incident to normal maintenance. All parts including lamps shall be secured to prevent falling or dislocation.

F. Lighting fixtures shall be positioned to clear all obstructions.

G. All auxiliary steel, supports and brackets of all kinds for safety erecting the fixtures shall be furnished and installed in place by the Installer.

H. Where coordination with other equipment is necessary some departure from the locations shown may be permitted on approval of Engineer.

I. All lighting units when installed shall be set true and shall be free of leaks, warps, dents or other imperfections.

J. All lighting fixtures shall be directly grounded to the equipment grounding system by means of a conductor of size not less than that required by NEC. If insulated, the ground conductor insulation shall be colored green.

K. The Installer shall fill in circuit designations on the panelboard directory as soon as permanent connections are completed.

L. Taps and splices shall be made with insulated wire nut connectors of the setscrew or spring type or with indent compression type connectors. Solid wire shall be terminated at screw type connections by looping around the terminal screw. At panelboards, solid wire may be terminated using screw type pressure terminals; stranded wire may be terminated using saddle type pressure terminals.

M. Install poles plumb. Provide shims or double nits to adjust plumb. Grout around each base.

N. All fixtures shall be installed for seismic requirements.

3.3 GROUNDING:

A. Provide equipment grounding connections for interior lighting fixtures as indicated under CSI Division 26 Section 260526, "Grounding and Bonding for Electrical Systems."

3.4 FIELD QUALITY CONTROL:

A. The Installer is not responsible for the foot candles of illumination provided by the completed systems. However, if after the lighting is installed and in operation, any areas are noted which are obviously under or over lit, the Installer shall promptly advise the Engineer.

B. Lamps/LED Modules furnished for temporary use during the construction period shall be similar to those shown on the fixture schedule. Fixtures shall be protected and maintained in good condition during construction. At the completion of the work, all fixtures shall be cleaned, inspected, and repaired, or replaced if damaged, and a complete set of new incandescent lamps shall be installed in fixtures requiring incandescent lamps.

3.5 ADJUSTING AND CLEANING:

A. Clean lighting fixtures of dirt and construction debris upon completion of installation. Clean finger-prints and smudges from lenses.

B. Protect installed fixtures from damage during remainder of construction period.

C. Adjust aim-able fixtures to provide required light intensities.

END OF SECTION 265600

SECTION 270000 - PREMISES TELEPHONE WIRING

PART 1 - GENERAL

1.1 SUMMARY:

A. This Section includes coordination with telephone utilities (Frontier).

B. Related CSI Sections include:

1. Division 26 Section 260533, “Raceways and Boxes for Electrical Systems.”
2. Division 26 Section 260543, “Underground Ducts and Raceways for Electrical Systems”

1.2 COORDINATION:

A. Telephone System Wiring: The Contractor shall install conduit with pull wire from pole #5840 as shown on plans and terminate at the Demarcation box in accordance to Frontier’s specifications. Frontier shall install communications conductors from pole #5840 to the Demarcation box. There is a Frontier utility charge of $600 for their work which should be included in the contract bid price. This amount also includes the service connections to the facility by the utility company. All bidders will include the above amount in Item No. 1700001A – Service Connections (Estimated Cost) along with costs for work by other utilities.

1.3 TELEPHONE CONDUIT SYSTEM:

A. The Contractor shall furnish and install a complete telephone conduit system as shown on the plans. All communication and data conductors shall be installed in conduit unless otherwise noted.

B. Empty conduit shall contain a pull wire, Greenlee No.430 poly pull line, or an approved equal.

PART 2 - EXECUTION

2.1 INSTALLATION:

A. The Installer shall provide for the installation of underground conduit and cable as detailed in CSI Section 260543, “Underground Ducts and Raceways for Electrical Systems.”

2.2 FIELD QUALITY CONTROL

A. Tests and Inspections:

1. Perform tests and inspections with Frontier to ensure phone system is fully operational.

2. Visually inspect communication conductors. Inspect cabling terminations in communications equipment.
3. Visually inspect cable placement, cable termination, grounding and bonding.

END OF SECTION 270000

SECTION 300000 – FORM 817 SITE WORK

PART 1 - GENERAL:

PART 2 - SUMMARY:

A. CLEARING AND GRUBBING: Refer to Form 817 Article 02.01.01 for requirements related to this work.

B. EARTH EXCAVATION: Refer to Form 817 Article 02.02.01 for requirements related to this work.

C. CUT BITUMINOUS CONCRETE PAVEMENT: Refer to Form 817 Article 02.02.01 for requirements related to this work.

D. TRENCH EXCAVATION 0'-4' DEEP: Refer to Form 817 Article 02.05.01 for requirements related to this work.

E. BORROW: Refer to Form 817 Article 02.07.01 for requirements related to this work.

F. WATER POLLUTION CONTROL: Refer to Form 817 Article 02.10.01 for requirements related to this work.

G. GRANULAR FILL: Refer to Form 817 Article 02.13.01 for requirements related to this work.

H. SEDIMENTATION CONTROL SYSTEM: Refer to Form 817 Article 02.19.01 for requirements related to this work.

I. BEDDING MATERIAL: Refer to Form 817 Article 06.51.02 for requirements related to this work.

J. BITUMINOUS CONCRETE LIP CURBING: Refer to Form 817 Article 08.15.01 for requirements related to this work.

K. WATER FOR DUST CONTROL: Refer to Form 817 Article 09.43.01 for requirements related to this work.

L. FURNISHING AND PLACING TOPSOIL: Refer to Form 817 Article 09.44.01 for requirements related to this work.

M. PAINTED PAVEMENT MARKINGS: Refer to Form 817 Article 12.09.01 for requirements related to this work.

PART 3 - PRODUCTS

3.1 MATERIALS:

A. CLEARING AND GRUBBING: N/A

B. EARTH EXCAVATION: N/A

C. CUT BITUMINOUS CONCRETE PAVEMENT: N/A

D. TRENCH EXCAVATION 0'-4' AND 0'-10' DEEP: N/A

E. BORROW: Refer to Form 817 Article 02.07.02 for requirements related to this work.

F. WATER POLLUTION CONTROL: Refer to Form 817 Article 02.10.02 for requirements related to this work.

G. GRANULAR FILL: Refer to Form 817 Article 02.13.02 for requirements related to this work.

H. SEDIMENTATION CONTROL SYSTEM: Refer to Form 817 Article 02.19.02 for requirements related to this work.

I. BEDDING MATERIAL: Refer to Form 817 Article 06.51.02 for requirements related to this work.

J. BITUMINOUS CONCRETE LIP CURBING: Refer to Form 817 Article 08.15.02 for requirements related to this work.

K. WATER FOR DUST CONTROL: N/A

L. FURNISHING AND PLACING TOPSOIL: Refer to Form 817 Article 09.44.02 for requirements related to this work.

M. PAINTED PAVEMENT MARKINGS: Refer to Form 817 Article 12.09.02 for requirements related to this work.

PART 4 - EXECUTION

4.1 EXECUTION:

A. CLEARING AND GRUBBING: Refer to Form 817 Article 02.01.03 for requirements related to this work.

B. EARTH EXCAVATION: Refer to Form 817 Article 02.02.03 for requirements related to this work.

C. CUT BITUMINOUS CONCRETE PAVEMENT: Refer to Form 817 Article 02.02.03 for requirements related to this work.

D. TRENCH EXCAVATION 0'-4' AND 0'-10' DEEP: Refer to Form 817 Article 02.05.03 for requirements related to this work.

E. BORROW: Refer to Form 817 Article 02.07.03 for requirements related to this work.

F. WATER POLLUTION CONTROL: Refer to Form 817 Article 02.10.03 for requirements related to this work.

G. GRANULAR FILL: Refer to Form 817 Article 02.13.03 for requirements related to this work.

H. SEDIMENTATION CONTROL SYSTEM: Refer to Form 817 Article 02.19.03 for requirements related to this work.

I. BEDDING MATERIAL: Refer to Form 817 Article 06.51.03 for requirements related to this work.

J. BITUMINOUS CONCRETE LIP CURBING: Refer to Form 817 Article 08.15.03 for requirements related to this work.

K. WATER FOR DUST CONTROL: Refer to Form 817 Article 09.43.03 for requirements related to this work.

L. FURNISHING AND PLACING TOPSOIL: Refer to Form 817 Article 09.44.03 for requirements related to this work.

M. PAINTED PAVEMENT MARKINGS: Refer to Form 817 Article 12.09.03 for requirements related to this work.

END OF SECTION 300000

SECTION 300500 – TEMPORARY MAINTENACE WORK AREA

PART 1 - GENERAL

1.1 SUMMARY:

A. The Contractor shall provide temporary facilities for the exclusive use of Department personnel.

B. The Contractor shall:

1. Set-up all temporary facilities on the Project Site.
2. Connect all temporary facilities to all utilities and support services.
3. Make all temporary facilities fully functional and acceptable to the Engineer prior to the start of demolition of the existing building or the existing motor fuel island.

C. The Department will make the following materials available to the Contractor for pickup at the Department's maintenance facility located at 1640 Saybrook Road, Haddam, CT to establish the temporary facilities:

1. 2,000 gallon Aboveground Storage Tank.
2. Access Stairs.
3. Fuel Dispenser.
4. Fuel Management Unit.
5. Nozzle and Hose.
6. Filter and Adapter.

Contact Mr. Jeffrey Tedesco at (860) 666-8568 a minimum of 72 hours in advance to make arrangements to pick up materials.

D. Temporary facilities shall remain on the Project Site for the duration of the Project, including Contract time extensions if any occur, and if required for a maximum of 30 days thereafter.

E. Temporary facilities shall be removed from the Project Site as described herein, unless otherwise noted.

1.2 SUBMITTALS:

A. Submit the following in accordance with Form 817 Article 1.20-1.05.02 and NOTICE TO CONTRACTOR – SUBMITTALS for the fuel dispensing equipment.

B. Product Data: For each type of product indicated. Include rated capacities of selected model clearly indicated, installation and start-up instructions, and calibration charts.

C. Shop Drawings: Include wiring diagrams that detail wiring for power, signal, and control systems and differentiate between portions of wiring that are factory-installed and portions to be field-installed.

D. The Engineer will approve the remaining materials to be installed by the Contractor, unless otherwise noted.

PART 2 - PRODUCTS

2.1 FUEL DISPENSING ISLAND:

A. Compacted Granular Fill: Refer to Form 817, Section 2.14 “Compacted Granular Fill” for material and construction methods required.

B. Concrete Pads: Comply with the requirements in CSI Division 03 Section 033000, “Cast-in-Place Concrete.”

C. Precast Concrete Barriers: Refer to Form 817, Section 8.21 “Precast Concrete Barrier Curb” for material and construction methods required.

D. Temporary Steel Plate: 1” thick steel plate, conforming to ASTM A36, with minimum dimensions as shown on the plans.

E. Chain Link Fence and Gate: Refer to Form 817, Section 9.13 “Chain Link Fence” for material and construction methods required.

F. The fuel dispensing equipment (tank, tank accessories, fuel dispenser, FMU, emergency controls and miscellaneous components) shall meet all of the applicable regulatory requirements set forth by ASTM, NFPA, STI, and UL.

G. The Contractor shall provide mounting hardware and miscellaneous parts to complete installation.

H. Floodlight and Support: The floodlights shall be rugged, weather resistant die-cast aluminum with gasket, and shall be equipped with a photocell for Dusk-to-Dawn operation. Lithonia model # OFLR-6LC-120-P-WH with two tool-free adjustable heads with high-performance 5000K CCT LED’s, 120 Volts, and photocell. The mast support for the lights shall be composed of steel c-channel as specified under Specification CSI Division 26 Section 260529, "Hangers and Supports for Electrical Systems."

I. The Contractor shall use threaded RGSC for all power and communication feeds when conduits enter into a Class I, Division 1/Division 2 hazardous location and for all surface mounted conduit around the dispenser as shown on Drawing No. ET-001.

J. The Contractor shall use a minimum #12 stranded copper conductors rated for 600 volts with THWN or THNN insulation within the Class I, Division 1 hazardous location unless otherwise noted. Grounding wire shall be green-type.

K. Junction Boxes shall be threaded, explosion-proof, Model No. GRSS-2 as manufactured by Killark, or an approved equal.

L. Explosion-proof fittings shall be threaded, recessed-type, close-up plugs, Model No. EYSF75 as manufactured by Appleton, or an approved equal. Screwdriver slotted close-up plugs shall not be accepted. When necessary to employ flexible connections, as at motor terminals, flexible fittings listed for Class I locations shall be used.

M. Conduit Seals shall be approved for Class I, Division I locations as described in section 501-15(a)-(f) of the NEC. Sealing compound shall be approved and shall provide a seal against passage of gas or vapors through the seal fitting, shall not be affected by the surrounding atmosphere or liquids, shall not have melting point of less than 200 degrees F. In a completed seal, the minimum thickness of the sealing compound shall no be less than the trade size of the sealing fitting and, in no case, less than 5/8 inch.

N. Each circuit leading to or through dispensing equipment, including equipment for remote pumping systems, shall be provided with a clearly identified and readily accessible switch or other acceptable means, located remote from the dispensing device, to disconnect simultaneously from the source of supply, all conductors of the circuit, including the grounded (neutral) conductor. Emergency controls shall be more than 20 feet but less than 100 feet from the dispenser.

O. Emergency Shut-off (Quick Stop Button): The quick stop button functions to remove power by depressing the red mushroom-shaped button. Power restored by manually resetting the shunt trip device and turning the button clockwise a partial turn until it pops back out to the reset position.

P. The dispenser shall be controlled by the dispenser's "on/off" handle at the point of fuel distribution and remotely by the circuit breaker.

Q. Fixed wiring: Threaded RGSC with termination fittings and wiring methods approved for Class I location shall be employed. All boxes, fittings and joints shall be threaded for connection to conduit and shall be explosion-proof. Threaded joints shall be made up with at least 5 threads fully engaged.

R. Grounding: All metal raceways and all non-current carrying metal parts of fixed or portable electrical equipment, regardless of voltage, shall be grounded as provided in NEC Article 250 and per Article 514-16. The locknut–bushing and double-locknut types of contacts shall not be depended on for bonding purposes, but bonding jumpers with proper fittings shall be used. Such means of bonding shall apply to all intervening raceways, fittings, boxes, enclosures, etc., between Class I location and the point of grounding for service equipment. Bonding shall be jumpers with proper fittings for bonding purposes.

S. An approved seal shall be provided in each conduit run entering or leaving a dispenser or any cavities or enclosures in direct communication therewith. The sealing fitting shall be the first fitting after the conduit emerges from the earth or the concrete.

T. Splices and taps shall not be made in fittings intended only for sealing with compound, nor shall other fittings in which splices or taps are made be filled with compound.

U. The cross-sectional area of the conductors permitted in a seal shall not exceed 25% of the cross-sectional area of a RGSC of the same trade.

PART 3 - EXECUTION

3.1 INSTALLATION, GENERAL:

A. The Contractor shall locate temporary facilities where shown on the plans and as directed by the Engineer. The temporary facilities shall be installed in accordance with Form 817 Article 1.08.02, as supplemented herein.

3.2 INSTALLATION, FUEL DISPENSING ISLAND:

A. The Contractor shall install each component of the fuel dispensing island as shown on the plans, in accordance with manufacturer's installation instructions, and in accordance with NFPA 30 and 30A. Additional installation requirements are described herein, where applicable. The Contractor shall provide a fully operational system when complete.

B. The Contractor shall modify the AST and dispenser as necessary to be used to store and dispense diesel fuel. The Contractor shall verify fuel dispenser is secured to tank and all necessary piping connections are completed.

C. The Contractor shall verify the existing fill assembly complies with the requirements of NFPA 30A and incorporates the following features:

1. A lockable tight fill cap, adapter, fill pipe, and drop tube.
2. The bottom of the fill drop tube shall be cut at a 45-degree angle with the open end facing the long dimension of the tank.
3. The drop tube shall terminate 6-inches from the bottom of the tank.

D. The Contractor shall verify the existing overfill prevention equipment complies with the requirements of NFPA 30A and incorporates the following features:

1. An audible alarm which will sound when the product level in the tank has reached 85% of tank capacity, or a liquid level gauge marked at 85% of tank capacity.
2. A positive shut-off fill limiter which will stop the flow of liquid into the tank when product level reaches 90% of tank capacity.

3. The fill-limiting device shall be rated to accept the fill flow rate and pressure.

E. The Contractor shall verify the existing product piping at the tank includes and anti-siphon device that will prevent the flow of liquid from the tank unless the suction pump is operating, in accordance with NFPA 30A.

F. The Contractor shall verify that a pressure relief valve is included in each segment of blocked piping that will relieve excessive pressure resulting from thermal expansion and return any excess product to the tank.

G. The tank and associated equipment shall be installed in accordance with the STI installation instructions for Fireguard aboveground tanks (Publication No. R942-94, Installation and Testing Instructions for Thermally Insulated Lightweight Double Wall Fireguard Aboveground Storage Tanks).

H. The Contractor shall (1) use tank handling equipment of adequate size to lift and set the tank without dragging or dropping it; (2) advise the Engineer of any shipping or handling damage encountered; and (3) not make any modifications to any tank without the prior written approval of the manufacturer and the Engineer. Such modifications include any welding on tank shells, adding penetrations in the tank structure, or repairing damage that might affect the integrity of the inner or outer tank.

I. The Contractor shall locate the temporary steel plate where shown on the plans and as directed by the Engineer.

J. The Contractor shall locate precast concrete barriers where shown on the plans and as directed by the Engineer.

K. The Contractor shall locate the chain link fence and gate where shown on the plans and as directed by the Engineer.

L. The Contractor shall protect existing exposed piping and equipment from corrosion by painting or wrapping it with a coating that is compatible with diesel fuel and the conditions of the exposure.

M. The Contractor shall locate the concrete pad for the temporary FMU where shown on the plans and as directed by the Engineer.

N. Install temporary FMU and retrofit to work with dispenser.

O. Provide a fully operational temporary automated fuel management system. The temporary FMU shall interface with the existing head-end located at 2800 Berlin Turnpike, Newington, CT. Coordinate dial-up programming with the Department Fuel Control. The following information shall be recorded by the system for each fueling transaction: user identification number, vehicle odometer/hourmeter, vehicle number, quantity of fuel dispensed, fuel site, date and time, hose number and product number, and key type.

P. FMU Power Requirements: 120 volts, 60 Hz, from a separate dedicated circuit.

Q. Floodlight and Support: The Contractor shall firmly attach the c-channel mast to the precast concrete barrier. The Contractor shall install a surface mounted metallic box to attach the floodlights to the mast. Route surface mounted RGSC conduit along the c-channel to feed the floodlights.

R. The Contractor shall install all conduit, boxes, and wiring in accordance to NFPA 70 and shall run green bond wire in all conduits.

S. The Contractor shall install RGSC from the source of power to the fuel dispensing system, and complete conduit, terminations with explosion-proof fittings. All E.Y. fittings for conduit runs to the fuel island shall be properly sealed. The Contractor shall leave close-up plugs hand tight after sealing to provide for the Engineer's inspection of these fittings.

T. The Contractor shall extend fuel dispensing island power and communication circuits from the power panels and communication cabinets in the temporary service area to the temporary fuel island location. The Contractor shall complete all necessary terminations in accordance with NEC Article 514 and sections described above.

U. The Contractor shall perform air pressure testing of the inner tank and secondary containment tank on-site in the presence of the Engineer before placing the tank in service. Refer to STI Publication No. R942-94 for complete procedural details.

V. The Contractor shall test piping on-site in the presence of the Engineer before placing the piping in service. The Contractor shall perform minimum hydrostatic or pneumatic test-pressures measured at highest point in system, minimum 1.5 times the designed working pressure but not less than 5 psig for minimum 2 hours, isolate storage tanks if test pressure in piping will cause pressure in storage tanks to exceed 10 psig and shall soap pipe fittings. Piping will be considered defective if it does not pass tests. Defective piping shall be repaired or replaced, and then retested.

W. The Contractor shall test each component of the system for calibration, tightness and proper operation in accordance with the instructions of the component manufacturer.

X. Testing shall be documented by the Contractor and witnessed by the Engineer. Record the date and time of the test, the name of the tester and their affiliation with the Project, and the names of each individual witnessing the test. The Contractor shall record the test method, duration and results, and provide a record of the testing to the Engineer at the time of system start-up.

Y. The Owner will supply diesel fuel to fill the temporary AST upon its acceptance by the Engineer.

3.3 PROJECT CLOSEOUT:

A. When the Engineer determines that the temporary facilities are no longer needed, the Department will empty the temporary AST.

B. The Contractor shall prepare the following Owner equipment for salvage and removal from the Project Site, including but not limited to the removal of connected utilities:

1. Equipment identified in Part 1.1C.
2. Fuel Island components and plywood backboards.
3. Chain link fence and gate.

C. The Contractor shall move the Owner property identified in Part 3.4B to the Department's Maintenance Facility located at 1640 Saybrook Road, Haddam, CT, 06438 within 14 calendar days of their abandonment.

D. The Contractor shall:

1. Demolish all work not identified to be salvaged.
2. Relocate the precast concrete barriers on the Project Site as directed by the Engineer.
3. Complete Project Site work.

END OF SECTION 300500

SECTION 302000 – GENERAL SITE WORK

PART 1 - GENERAL

1.1 SUMMARY:

A. Section Includes:
1. Steel Bollard.
2. Bollard.
3. Flagpole.

1.2 ACTION SUBMITTALS:

A. Submit the following in accordance with Form 817 Article 1.20-1.05.02 and NOTICE TO CONTRACTOR – SUBMITTALS.

B. Product Data: For each type of product indicated.

C. Shop Drawings: For concrete pad.

PART 2 - PRODUCTS

2.1 MATERIALS:

A. STEEL BOLLARD:

1. Steel bollard: Schedule 40 galvanized steel pipe, 4 inch outside diameter, conforming to the requirements of ASTM-A53.
2. Concrete: Class "A" meeting the requirements of CSI Division 03, Section 033000, "Cast-in-Place Concrete".
3. Paint: Bollard shall be primed and finished with "Highway Safety Yellow" rust preventive metal paint.

B. BOLLARD:

1. Steel bollard: Schedule 80 galvanized steel pipe, 8 inch nominal size (8.625" O.D.), conforming to the requirements of ASTM-A53.
2. Concrete: Class "A" meeting the requirements of CSI Division 03, Section 033000, "Cast-in-Place Concrete".

3. Polyethylene sleeve. Bumper (Bollard) Post Sleeve #PLS1009, as manufactured by New Pig Corporation or approved equivalent. Sleeve shall be yellow in color with ¼”-thick polyethylene shell.

C. FLAGPOLE: Flagpoles shall be as manufactured by American Flag, Bohemia, New York, or approved equal. Poles shall be tapered aluminum tubing and shall measure 40'-0" high from the finished grade. Provide standard revolving truck and cleat and 6" ball. Provide copper clad lightning rod. Flagpole foundation shall comply with manufacturer’s recommendations.

PART 3 - EXECUTION

3.1 EXECUTION:

A. STEEL BOLLARD: Bollards shall be installed in the locations shown on the plans. The steel pipe shall be securely set plumb in concrete and shall comply with the manufacturer’s recommendations.

B. BOLLARD: Bollards shall be installed in the locations shown on the plans. The steel pipe shall be securely set plumb in concrete and filled with concrete. The polyethylene sleeve shall be installed as recommended by the manufacturer.

C. FLAGPOLE: Install flagpole in location shown on the plans. All materials shall be installed in strict accordance with the manufacturer's recommendations.

END OF SECTION 302000

SECTION 304000 – FENCING AND GATES

PART 1 - GENERAL

1.1 SUMMARY:

A. Section Includes:

1. Chain link fence and gates.

1.2 ACTION SUBMITTALS:

A. Submit the following in accordance with Form 817 Article 1.20-1.05.02 and NOTICE TO CONTRACTOR – SUBMITTALS.

1. Product Data in the form of manufacturer's technical data, specifications, and installation instructions for fence and gate posts, fabric, gates, and accessories.

2. Quality Assurance Submittals:

a. Installer Qualifications: Engage an experienced Installer who has at least three years' experience and has completed at least five chain link fence projects with same material and of similar scope to that indicated for this Project with a successful construction record of in-service performance.

3. Single-Source Responsibility: Obtain chain link fences and gates, including accessories, fittings, and fastenings, from a single source.

PART 2 - PRODUCTS:

2.1 MATERIALS:

A. 6’ HIGH POLYVINYL CHLORIDE CHAIN LINK FENCE, 6’ POLYVINYL CHLORIDE CHAIN LINK DOUBLE GATE 6’ HIGH, 10’ HIGH POLYVINYL CHLORIDE CHAIN LINK FENCE, 6’ POLYVINYL CHLORIDE CHAIN LINK DOUBLE GATE 10’ HIGH:

1. General: Round member sizes are given in actual outside diameter (OD) to the nearest thousandth of inches. Round fence posts and rails are often referred to in ASTM standard specifications by nominal pipe sizes (NPS) or the equivalent

trade sizes in inches. The following indicates these equivalents all measured in inches:

Actual OD	NPS Size	Trade Size
1.315	1	1-3/8
1.660	1-1/4	1-5/8
1.900	1-1/2	2
2.375	2	2-1/2
2.875	2-1/2	3
3.500	3	3-1/2
4.000	3-1/2	4
6.625	6	6-5/8
8.625	8	8-5/8

2. Fence Posts and Rail:

a. General: Type I Round Posts, standard weight (schedule 40) galvanized-steel pipe conforming to ASTM F 1083, according to heavy industrial requirements of ASTM F 669, Group IA, with minimum yield strength of 25,000 psi, not less than 1.8 oz. of zinc per sq. ft. Type A coating inside and outside according to ASTM F 1234, as determined by ASTM A 90, and weights per foot as follows:

Actual OD(in)	Weight(lb/ft)
1.315	1.68
1.660	2.27
1.900	2.72
2.375	3.65
2.875	5.79
3.500	7.58
4.000	9.11
6.625	8.97
8.625	28.55

a. Supplemental Color Coating: In addition to above metallic coatings, provide posts and rails with manufacturer's standard polymer coating according to ASTM F 1234, 10-mil minimum polyvinyl chloride (PVC) or 3-mil minimum polyester plastic resin finish applied to exterior surfaces and, except for tubular shapes, to exposed interior surfaces. Color to match chain link fabric.

b. Line or Intermediate Posts: 2.375-inch OD Type I round steel pipe.

c. End, Corner, and Pull Posts: 2.875-inch OD Type I round steel pipe.

d. Swing Gate Posts: Furnish posts to support single gate leaf, or one leaf of a double-gate installation, according to ASTM F 900, sized as follows for steel and pipe posts:

i. Fence height over 6 feet and gate leaf width:

a.) Up to and including 6 Feet: 2.875-inch OD pipe weighing at least 4.64 lb per ft.

e. Top Rail: Manufacturer's longest lengths (17 to 21 feet) with swedged-end or expansion-type coupling. Provide rail ends or other means for attaching top rail securely to each gate, corner, pull, and end post. 1.660-inch OD Type I round steel pipe.

3. Gate Frame Members:

a. Swing Gate Frame Members: Provide horizontal and vertical members to ensure proper gate operation and attachment of fabric, hardware, and accessories. The gate frame shall be constructed from same material and finish as fence framework, welded at all corners or assembled with corner fittings. Members are sized as follows for steel and pipe posts:

i. Gate height over 6 feet: 1.90-inch OD round pipe weighing at least 2.28 lb. per foot.

b. Truss rods: Gate frames assembled with corner fittings shall have adjustable truss rods. 5/16-inch OD round pipe of the same metal and finish as the frame.

c. Interior bracing: Gate leaf shall have vertical interior bracing at maximum intervals of 8 ft. and shall have a horizontal interior member if fabric height is 8 ft. or more. Additional horizontal, vertical or diagonal member or diagonal truss rods may be needed to comply with ASTM F 900 Section 5.2.1. 5/16-inch OD round pipe of the same metal and finish as the frame.

4. Fabric:

a. Steel Chain-Link Fence Fabric: Fabricated in one-piece widths for fencing 12 feet and less in height to comply with CLFMI "Product Manual" and with requirements indicated below:

i. Mesh and Wire Size: 2-inch mesh, 0.148-inch diameter (9 gage).

ii. Coating: ASTM A 817, Type 1, 0.40 oz./ft2 aluminum coating.

iii. PVC Coating Color: Dark green, complying with ASTM F 934.

b. Chain Link Gate Fabric: The fabric shall same as specified for fence. Secure fabric at vertical edges with tension bars and bands and to top and bottom of frame with tie wires.

5. Fittings and Accessories:

a. General: Comply with ASTM F 626. Mill-finished aluminum or galvanized iron or steel to suit manufacturer's standards. Unless specified otherwise, hot-dip galvanize pressed steel or cast-iron fence fittings and accessories with at least 1.2 oz. zinc per sq. ft. as determined by ASTM A 90.

b. Supplemental Color Coating: In addition to above metallic coatings, provide a 10-mil minimum polyvinyl chloride (PVC) or 3-mil minimum polyester plastic resin finish applied to exterior surfaces and, except inside cap shapes, to exposed interior surfaces. Color to match chain link fabric.

c. Post and Line Caps: Provide weather-tight closure cap for each post. Provide line post caps with loop to receive top rail.

d. Post Brace Assembly: Manufacturer's standard adjustable brace. 1.660-inch OD Type I round steel pipe for brace, and truss to line posts with 3/8-inch-diameter rod and adjustable tightener. Provide manufacturer's standard galvanized-steel, cast-iron or cast-aluminum cap for each end.

e. Top Rail Sleeves: Rail sleeve material shall be a minimum of 0.051 in. in thickness, and a minimum of 6 in. in length. Rail sleeve must be fabricated to prevent movement along the rail.

f. Tension or Stretcher Bars: Hot-dip galvanized steel with a minimum length 2 inches less than the full height of fabric, a minimum cross section of 3/16 inch by 3/4 inch, and a minimum of 1.2 oz. of zinc coating per sq. ft. Provide one bar for each gate and end post, and two for each corner and pull post, except where fabric is integrally woven into the post.

g. Tension and Brace Bands: ¾-inch-wide minimum hot-dip galvanized steel with a minimum of 1.2 oz. of zinc coating per sq. ft.

i. Tension Bands: 0.074 inch thick (14 gage) minimum.
ii. Brace Bands: 0.105 inch thick (12 gage) minimum.

h. Truss Rod Assembly: Steel rods shall be 5/16 in. diameter and it and all related devices shall be hot-dip galvanized after threading with a minimum of 1.2 oz. of zinc coating per sq. ft. Truss rod and tightener shall be capable of withstanding a tension of 2000 lb.

i. Tension Wire: 0.177-inch-diameter metallic-coated steel Marcelled tension wire conforming to ASTM A 824 with finish to match fabric. Coating shall be Type I aluminum with a minimum coating weight of 0.40 oz. per sq. ft. as determined by ASTM A 824.

j. Tie Wires and Clips: 0.148-inch diameter (9 gage)steel with a tensile strength range from 55 to 65 ksi with a minimum coating of 0.40 oz./ft2 of aluminum. Round metallic-coated steel tie wires, clips and hog rings shall withstand all forming or twisting operations without cracking or flaking of the aluminum coating. Bend ends of wire to minimize hazard to persons or clothing.

k. Privacy Slats: Winged-type, Extruded PVC memebers of length to match fence height.

i. Color: Green

6. Gate Hardware

a. General: Provide galvanized hardware and accessories for each gate.

b. Hinges: Size and material to suit gate size, non-lift-off type, offset to permit 180-degree gate opening. Provide 1-1/2 pair of hinges for each leaf over 6-foot nominal height.

c. Latch: Drop rod or plunger-bar type to permit operation from either side of gate, with padlock eye as an integral part of latch.

d. Keeper: Provide a keeper for vehicle gates that automatically engages gate leaf and holds it in the open position until manually released.

e. Gate Stops: Provide gate stops for double gates consisting of mushroom-type flush plate with anchors, set in concrete, and designed to engage a center drop rod or plunger bar. Include a locking device and padlock eyes as an integral part of the latch, permitting both gate leaves to be locked with a single padlock.

f. Chain: Provide welded stainless steel, Type 347 0.375 dia. chain in lengths required as specified by the Engineer.

PART 3 - EXECUTION:

3.1 EXECUTION:

A. 6’ HIGH POLYVINYL CHLORIDE CHAIN LINK FENCE, 6’ POLYVINYL CHLORIDE CHAIN LINK DOUBLE GATE 6’ HIGH, 10’ HIGH POLYVINYL CHLORIDE CHAIN LINK FENCE, 6’ POLYVINYL CHLORIDE CHAIN LINK DOUBLE GATE 10’ HIGH:

1. General: Install fence to comply with ASTM F 567, in the location indicated on the plans. Do not begin installation and erection before final grading is completed, unless otherwise permitted.

2. Excavation: Excavation and backfilling shall be performed as described herein and in accordance with Article 2.02.03 of Form 817.

3. Drill or hand-excavate (using post-hole digger) holes for all posts to diameters and spacings indicated, in firm, undisturbed or compacted soil. Excavate holes for each fence post to a minimum of 9 inches in diameter for all line posts and 12 inches in diameter for terminal, pull or corner posts, but not less than four times the largest cross section of post. Excavate holes for all fence posts to depths not less than 40 inches below finish grade surface. Gate post holes shall comply with the following:

   a. Gate width up to 12 feet: Excavate to a minimum diameter of 12 in. and a minimum depth of 40 in.

4. Setting Posts: Center and align posts in holes 4 inches above bottom of excavation. Space a maximum of 10 feet o.c., unless otherwise indicated. Pull posts shall be provided where a change in vertical or horizontal alignment of ten (10) degrees or more occurs. Place concrete for the full depth of excavation, around all posts (including, but not limited to, line, corner and gate posts) and vibrate or tamp for consolidation. Unless otherwise indicated, extend concrete footings 2 inches above grade and trowel to a crown to shed water. Protect portion of posts above ground from concrete splatter. Check each post for vertical and top alignment, and hold in position during placement and finishing operations.

5. Brace Assemblies: Install braces at end and gate posts and at both sides of corner and pull posts. Locate horizontal braces at mid-height of fabric on fences with top rail and at two thirds fabric height on fences without top rail. Install so posts are plumb when diagonal rod is under proper tension.

6. Top Rails: Run rail continuously through line post caps for entire length of fence, terminating at rail end attached to posts or at post caps fabricated to receive rail. Provide expansion couplings as recommended by fencing manufacturer.

7. Bottom Tension Wire: Install tension wire within 6 inches of bottom of fabric before stretching fabric and tie to each post with not less than same gage and type

of wire. Pull wire taut, without sags. Fasten to fabric with wire ties spaced a maximum of 24 inches o.c.

8. Fabric: Apply fabric to outside of the area enclosed. Leave approximately 2 inches between finish grade and bottom selvage. Place the fabric by securing one end and applying sufficient tension to remove all slack before making attachment elsewhere. Tighten the fabric to provide a smooth uniform appearance free from sag. Cut the fabric by untwisting a picket and attach each span independently at all terminal posts. Thread tension bars through fabric and secure to end, corner, pull, and gate posts with tension bands spaced not over 15 inches o.c. Fasten fabric to the line posts at intervals not exceeding 15 in. Fasten fabric to the rail or tension wire at intervals not exceeding 24 in.

9. Privacy Slats: Install privacy slats according to manufacturer’s instructions.

10. Fasteners: Install nuts for tension bands and carriage bolts on the side of the fence opposite the fabric side. Peen ends of bolts or score threads to prevent removal of nuts for added security.

11. Gate Installation: Install gates, according to manufacturer's instructions, plumb, level, and secure for full opening without interference. Install ground-set items in concrete for anchorage. Adjust hardware for smooth operation and lubricate where necessary. After repeated operation of completed installation equivalent to 3 days use by normal traffic, readjust gates and gate operators and controls for optimum operating condition and safety. Lubricate operating equipment and clean exposed surfaces.

END OF SECTION 304000

SECTION 305000 – TURF ESTABLISHMENT

PART 1 - GENERAL

1.1 SUMMARY:

A. TURF ESTABLISHMENT - LAWN: This work shall consist of providing an accepted stand of established grass by furnishing and placing seed as shown on the plans or ordered by the Engineer.

1.2 ACTION SUBMITTALS:

A. Submit the seed mixes in accordance with Form 817 Article 1.20-1.05.02 and NOTICE TO CONTRACTOR – SUBMITTALS.

PART 2 - PRODUCTS

2.1 MATERIALS:

A. TURF ESTABLISHMENT - LAWN: The materials for this work shall conform to the requirements of Form 817 Article 9.50. The following mix shall be used:

In order to preserve and enhance the diversity, the source for seed mixtures shall be locally obtained within the Northeast USA including New England, New York, Pennsylvania, New Jersey, Delaware, or Maryland. One approved seed mixture is detailed. Other proposed mixtures must be approved by the ConnDOT Landscape Design office.

Proportion (%)	Species Common Name	Species Scientific Name
20	Abbey Kentucky Bluegrass	Poa pratensis
10	Envicta Kentucky Bluegrass	Poa pratensis
25	Pennlawn Red Fescue	Festuca rubra
15	Ambrose Chewing Fescue	Festuca rubra
30	Manhattan Ryegrass	Lolium perenne

PART 3 - EXECUTION

3.1 EXECUTION:

A. TURF ESTABLISHMENT - LAWN: Construction methods shall be those established as agronomically acceptable and feasible, and that are approved by the Engineer. Rate of application shall be field determined in Pure Live Seed (PLS) based on the minimum

purity and minimum germination of the seeed obtained. Calculate the PLS for each seed species in the mix. Adjust the seeding rate for the above composition mix, based on 250 lbs/acre. The seed shall be mulched in accordance with Form 817 Article 9.50.03.

END OF SECTION 305000

SECTION 307000 – SANITARY/ DRAINAGE

PART 1 - GENERAL

1.1 SUMMARY:

A. Section Includes:

1. Polyvinyl Chloride Pipe (Sanitary Sewer)

1.2 ACTION SUBMITTALS:

A. Submit the following in accordance with Form 817 Article 1.20-1.05.02 and NOTICE TO CONTRACTOR – SUBMITTALS.

1. Polyvinyl Chloride Pipe (Sanitary Sewer)

PART 2 - PRODUCTS

2.1 MATERIALS:

A. POLYVINYL CHLORIDE PIPE (SANITARY SEWER)

1. PVC Pipe and Fittings: Solid-Wall PVC Pipe: ASTM D 2665, drain, waste, and vent. PVC Socket Fittings: ASTM D 2665, socket type, made to ASTM D 3311, drain, waste, and vent patterns. Steel Pipe Sleeves: ASTM A 53, Type E, Grade B, Schedule 40, galvanized, plain ends.
2. Bedding: Bedding material shall comply with the requirements of Subarticle M.08.01-21.

PART 3 - EXECUTION

3.1 EXECUTION:

A. POLYVINYL CHLORIDE PIPE (SANITARY SEWER)

1. General: Do not store plastic pipe and fittings in direct sunlight. Protect pipe, pipe fittings, and seals from dirt and damage. Support during storage to prevent sagging and bending.
2. Excavation: Excavation and backfilling shall be performed as described herein and in accordance with Article 2.05.03 of Form 817.
3. Bedding: Placement of bedding material shall comply with Form 817 Section 6.51.
4. PVC Pipe: Where specific joint construction is not indicated, follow piping manufacturer's written instructions. Install piping in accordance with ASTM D 2321. Make changes in direction using appropriate branches, bends, and long sweep bends. Do not change direction of flow more than 90 degrees. Use proper size of standard increasers and reducers if pipes of different sizes are connected. Reducing size of piping in direction of flow is prohibited. Join PVC piping with solvent-cemented joints in accordance with ASTM D 2855, with solvent cement conforming to ASTM D 2564 and primer conforming to ASTM F656. Maintain swab or drag in piping, and pull past each joint as it is completed. Place plug in end of incomplete piping at end of day and when work stops. Install sleeves for piping passing under building foundations.
5. Cleaning: Clean interior of piping. Remove dirt and debris as work progresses. Flush with potable water.

END OF SECTION 307000

PERMITS AND/OR REQUIRED PROVISIONS

The following Permits and/or Required Provisions follow this page and are hereby made part of this Contract.

- **PERMITS AND/OR PERMIT APPLICATIONS**

  No Permits are required for this contract

- **Construction Contracts - Required Contract Provisions (State Funded Only Contracts)**

Construction Contracts - Required Contract Provisions
(State Funded Only Contracts)

Index

1. Title VI of the Civil Rights Act of 1964 / Nondiscrimination Requirements

2. Contractor Work Force Utilization / Specific Equal Employment Opportunity

3. Contract Wage Rates

4. Americans with Disabilities Act of 1990, as Amended

5. Connecticut Statutory Labor Requirements

    a. Construction, Alteration or Repair of Public Works Projects; Wage Rates
    b. Debarment List - Limitation on Awarding Contracts
    c. Construction Safety and Health Course
    d. Awarding of Contracts to Occupational Safety and Health Law Violators Prohibited
    e. Residents Preference in Work on Other Public Facilities (Not Applicable to Federal Aid Contracts)

6. Tax Liability - Contractor's Exempt Purchase Certificate (CERT – 141)

7. Executive Orders (State of CT)

8. Non Discrimination Requirement (pursuant to section 4a-60 and 4a-60a of the Connecticut General Statutes, as revised)

9. Whistleblower Provision

10. Connecticut Freedom of Information Act

    a. Disclosure of Records
    b. Confidential Information

11. Service of Process

12. Substitution of Securities for Retainages on State Contracts and Subcontracts

13. Health Insurance Portability and Accountability Act of 1996 (HIPAA)

14. Forum and Choice of Law

15. Summary of State Ethics Laws

16. Audit and Inspection of Plants, Places of Business and Records

17. Campaign Contribution Restriction

18. Tangible Personal Property

19. Bid Rigging and/or Fraud – Notice to Contractor

20. Consulting Agreement Affidavit

Index of Exhibits

EXHIBIT A – Title VI Contractor Assurances (page 13)
EXHIBIT B – Contractor Work Force Utilization / Equal Employment Opportunity (page 14)
EXHIBIT C – Health Insurance Portability and Accountability Act of 1996 (HIPAA) (page 17)
EXHIBIT D - Campaign Contribution Restriction (page 25)
EXHIBIT E - State Wage Rates (Attached at the end)

1. Title VI of the Civil Rights Act of 1964 / Nondiscrimination Requirements

The Contractor shall comply with Title VI of the Civil Rights Act of 1964 as amended (42 U.S.C. 2000 et seq.), all requirements imposed by the regulations of the United States Department of Transportation (49 CFR Part 21) issued in implementation thereof, and the Title VI Contractor Assurances attached hereto at Exhibit A, all of which are hereby made a part of this Contract.

2. Contractor Work Force Utilization / Equal Employment Opportunity

(a) The Contractor shall comply with the Contractor Work Force Utilization / Equal Employment Opportunity requirements attached at Exhibit B and hereby made part of this Contract, whenever a contractor or subcontractor at any tier performs construction work in excess of $10,000. These goals shall be included in each contract and subcontract. Goal achievement is calculated for each trade using the hours worked under each trade.

(b) Companies with contracts, agreements or purchase orders valued at $10,000 or more will develop and implement an Affirmative Action Plan utilizing the ConnDOT Affirmative Action Plan Guideline. This Plan shall be designed to further the provision of equal employment opportunity to all persons without regard to their race, color, religion, sex or national origin, and to promote the full realization of equal employment opportunity through a positive continuation program. Plans shall be updated as required by ConnDOT.

3. Contract Wage Rates

The Contractor shall comply with:

The State wage rate requirements indicated in Exhibit E hereof are hereby made part of this Contract.

Prevailing Wages for Work on State Highways; Annual Adjustments. With respect to contracts for work on state highways and bridges on state highways, the Contractor shall comply with the provisions of Section 31-54 and 31-55a of the Connecticut General Statutes, as revised.

As required by section 1.05.12 (Payrolls) of the State of Connecticut, Department of Transportation's Standard Specification for Roads, Bridges and Incidental Construction (FORM 816), as may be revised, every Contractor or subcontractor performing project work on a federal aid project is required to post the relevant prevailing wage rates as determined by the United States Secretary of Labor. The wage rate determinations shall be posted in prominent and easily accessible places at the work site.

4. Americans with Disabilities Act of 1990, as Amended

This provision applies to those Contractors who are or will be responsible for compliance with the terms of the Americans with Disabilities Act of 1990, as amended (42 U.S.C. 12101 et seq.), (Act), during the term of the Contract. The Contractor represents that it is familiar with the terms of this Act and that it is in compliance with the Act. Failure of the Contractor to satisfy this standard as the same applies to performance under this Contract, either now or during the term of the Contract as it may be amended, will render the Contract voidable at the option of the State upon notice to the contractor. The Contractor warrants that it will hold the State harmless and indemnify the State from any liability which may be imposed upon the State as a result of any failure of the Contractor to be in compliance with this Act, as the same applies to performance under this Contract.

5. Connecticut Statutory Labor Requirements

(a) Construction, Alteration or Repair of Public Works Projects; Wage Rates. The Contractor shall comply with Section 31-53 of the Connecticut General Statutes, as revised. The wages paid on an hourly basis to any person performing the work of any mechanic, laborer or worker on the work herein contracted to be done and the amount of payment or contribution paid or payable on behalf of each such person to any employee welfare fund, as defined in subsection (i) of section 31-53 of the Connecticut General Statutes, shall be at a rate equal to the rate customary or prevailing for the same work in the same trade or occupation in the town in which such public works project is being constructed. Any contractor who is not obligated by agreement to make payment or contribution on behalf of such persons to any such employee welfare fund shall pay to each mechanic, laborer or worker as part of such person's wages the amount of payment or contribution for such person's classification on each pay day.

(b) Debarment List. Limitation on Awarding Contracts. The Contractor shall comply with Section 3l-53a of the Connecticut General Statutes, as revised.

(c) Construction Safety and Health Course. The Contractor shall comply with section 31-53b of the Connecticut General Statutes, as revised. The contractor shall furnish proof to the Labor Commissioner with the weekly certified payroll form for the first week each employee begins work on such project that any person performing the work of a mechanic, laborer or worker pursuant to the classifications of labor under section 31-53 of the Connecticut General Statutes, as revised, on such public works project, pursuant to such contract, has completed a course of at least ten hours in duration in construction safety and health approved by the federal Occupational Safety and Health Administration or, has completed a new miner training program approved by the Federal Mine Safety and Health Administration in accordance with 30 CFR 48 or, in the case of telecommunications employees, has completed at least ten hours of training in accordance with 29 CFR 1910.268.

Any employee required to complete a construction safety and health course as required that has not completed the course, shall have a maximum of fourteen (14) days to complete the course. If the employee has not been brought into compliance, they shall be removed from the project until such time as they have completed the required training.

Any costs associated with this notice shall be included in the general cost of the contract. In addition, there shall be no time granted to the contractor for compliance with this notice. The contractor's compliance with this notice and any associated regulations shall not be grounds for claims as outlined in Section 1.11 – "Claims".

(d) Awarding of Contracts to Occupational Safety and Health Law Violators Prohibited. The Contract is subject to Section 31-57b of the Connecticut General Statutes, as revised.

(e) Residents Preference in Work on Other Public Facilities. NOT APPLICABLE TO FEDERAL AID CONTRACTS. Pursuant to Section 31-52a of the Connecticut General Statutes, as revised, in the employment of mechanics, laborers or workmen to perform the work specified herein, preference shall be given to residents of the state who are, and continuously for at least six months prior to the date hereof have been, residents of this state, and if no such person is available, then to residents of other states

6. Tax Liability - Contractor's Exempt Purchase Certificate (CERT – 141)

The Contractor shall comply with Chapter 219 of the Connecticut General Statutes pertaining to tangible personal property or services rendered that is/are subject to sales tax. The Contractor is responsible for determining its tax liability. If the Contractor purchases materials or supplies pursuant to the Connecticut Department of Revenue Services' "Contractor's Exempt Purchase Certificate (CERT-141)," as may be revised, the Contractor acknowledges and agrees that title to such materials and supplies installed or placed in the project will vest in the State simultaneously with passage of title from the retailers or vendors thereof, and the Contractor will have no property rights in the materials and supplies purchased.

Forms and instructions are available anytime by:

Internet: Visit the DRS website at www.ct.gov/DRS to download and print Connecticut tax forms; or Telephone: Call 1-800-382-9463 (Connecticut calls outside the Greater Hartford calling area only) and select Option 2 or call 860-297-4753 (from anywhere).

7. Executive Orders

This contract is subject to the provisions of Executive Order No. Three of Governor Thomas J. Meskill, promulgated June 16, 1971, concerning labor employment practices, Executive Order No. Seventeen of Governor Thomas J. Meskill, promulgated February 15, 1973, concerning the listing of employment openings and Executive Order No. Sixteen of Governor John G. Rowland promulgated August 4, 1999, concerning violence in the workplace, all of which are incorporated into and are made a part of the contract as if they had been fully set forth in it. The contract may also be subject to Executive Order No. 14 of Governor M. Jodi Rell, promulgated April 17, 2006, concerning procurement of cleaning products and services and to Executive Order No. 49 of Governor Dannel P. Malloy, promulgated May 22, 2015, mandating disclosure of certain gifts to public employees and contributions to certain candidates for office. If Executive Order No. 14 and/or Executive Order No. 49 are applicable, they are deemed to be incorporated into and are made a part of the contract as if they had been fully set forth in it. At the Contractor's request, the Department shall provide a copy of these orders to the Contractor.

8. Non Discrimination Requirement (pursuant to section 4a-60 and 4a-60a of the Connecticut General Statutes, as revised): References to "minority business enterprises" in this Section are not applicable to Federal-aid projects/contracts. Federal-aid projects/contracts are instead subject to the Federal Disadvantaged Business Enterprise Program.

(a) For purposes of this Section, the following terms are defined as follows:

i. "Commission" means the Commission on Human Rights and Opportunities;
ii. "Contract" and "contract" include any extension or modification of the Contract or contract;
iii. "Contractor" and "contractor" include any successors or assigns of the Contractor or contractor;
iv. "gender identity or expression" means a person's gender-related identity, appearance or behavior, whether or not that gender-related identity, appearance or behavior is different from that traditionally associated with the person's physiology or assigned sex at birth, which gender-related identity can be shown by providing evidence including, but not limited to, medical history, care or treatment of the gender-related identity, consistent and uniform assertion of the gender-related identity or any other evidence that the gender-related identity is sincerely held, part of a person's core identity or not being asserted for an improper purpose.

v. “good faith" means that degree of diligence which a reasonable person would exercise in the performance of legal duties and obligations;

vi. "good faith efforts" shall include, but not be limited to, those reasonable initial efforts necessary to comply with statutory or regulatory requirements and additional or substituted efforts when it is determined that such initial efforts will not be sufficient to comply with such requirements;

vii. "marital status" means being single, married as recognized by the State of Connecticut, widowed, separated or divorced;

viii. "mental disability" means one or more mental disorders, as defined in the most recent edition of the American Psychiatric Association's "Diagnostic and Statistical Manual of Mental Disorders", or a record of or regarding a person as having one or more such disorders;

ix. "minority business enterprise" means any small contractor or supplier of materials fifty-one percent or more of the capital stock, if any, or assets of which is owned by a person or persons: (1) who are active in the daily affairs of the enterprise, (2) who have the power to direct the management and policies of the enterprise, and (3) who are members of a minority, as such term is defined in subsection (a) of Connecticut General Statutes § 32-9n; and

x. “public works contract" means any agreement between any individual, firm or corporation and the State or any political subdivision of the State other than a municipality for construction, rehabilitation, conversion, extension, demolition or repair of a public building, highway or other changes or improvements in real property, or which is financed in whole or in part by the State, including, but not limited to, matching expenditures, grants, loans, insurance or guarantees.

For purposes of this Section, the terms "Contract" and “contract” do not include a contract where each contractor is (1) a political subdivision of the State, including, but not limited to, a municipality, (2) a quasi-public agency, as defined in Conn. Gen. Stat. Section 1-120, (3) any other state, including but not limited to any federally recognized Indian tribal governments, as defined in Conn. Gen. Stat. Section 1-267, (4) the federal government, (5) a foreign government, or (6) an agency of a subdivision, agency, state or government described in the immediately preceding enumerated items (1), (2), (3), (4) or (5).

(b) (1) The Contractor agrees and warrants that in the performance of the Contract such Contractor will not discriminate or permit discrimination against any person or group of persons on the grounds of race, color, religious creed, age, marital status, national origin, ancestry, sex, gender identity or expression, intellectual disability, mental disability or physical disability, including, but not limited to, blindness, unless it is shown by such Contractor that such disability prevents performance of the work involved, in any manner prohibited by the laws of the United States or of the State of Connecticut; and the Contractor further agrees to take affirmative action to insure that applicants with job-related qualifications are employed and that employees are treated when employed without regard to their race, color, religious creed, age, marital status, national origin, ancestry, sex, gender identity or expression, intellectual disability, mental disability or physical disability, including, but not limited to, blindness, unless it is shown by the Contractor that such disability prevents performance of the work involved; (2) the Contractor agrees, in all solicitations or advertisements for employees placed by or on behalf of the Contractor, to state that it is an "affirmative action-equal opportunity employer" in accordance with regulations adopted by the Commission; (3) the Contractor agrees to provide each labor union or representative of workers with which the Contractor has a collective bargaining Agreement or other contract or understanding and each vendor with which the Contractor has a contract or

understanding, a notice to be provided by the Commission, advising the labor union or workers' representative of the Contractor's commitments under this section and to post copies of the notice in conspicuous places available to employees and applicants for employment; (4) the Contractor agrees to comply with each provision of this Section and Connecticut General Statutes §§ 46a-68e and 46a-68f and with each regulation or relevant order issued by said Commission pursuant to Connecticut General Statutes §§ 46a-56, 46a-68e and 46a-68f; and (5) the Contractor agrees to provide the Commission on Human Rights and Opportunities with such information requested by the Commission, and permit access to pertinent books, records and accounts, concerning the employment practices and procedures of the Contractor as relate to the provisions of this Section and Connecticut General Statutes § 46a-56. If the contract is a public works contract, the Contractor agrees and warrants that he will make good faith efforts to employ minority business enterprises as subcontractors and suppliers of materials on such public works projects.

(c) Determination of the Contractor's good faith efforts shall include, but shall not be limited to, the following factors: The Contractor's employment and subcontracting policies, patterns and practices; affirmative advertising, recruitment and training; technical assistance activities and such other reasonable activities or efforts as the Commission may prescribe that are designed to ensure the participation of minority business enterprises in public works projects.

(d) The Contractor shall develop and maintain adequate documentation, in a manner prescribed by the Commission, of its good faith efforts.

(e) The Contractor shall include the provisions of subsection (b) of this Section in every subcontract or purchase order entered into in order to fulfill any obligation of a contract with the State and such provisions shall be binding on a subcontractor, vendor or manufacturer unless exempted by regulations or orders of the Commission. The Contractor shall take such action with respect to any such subcontract or purchase order as the Commission may direct as a means of enforcing such provisions including sanctions for noncompliance in accordance with Connecticut General Statutes §46a-56; provided if such Contractor becomes involved in, or is threatened with, litigation with a subcontractor or vendor as a result of such direction by the Commission, the Contractor may request the State of Connecticut to enter into any such litigation or negotiation prior thereto to protect the interests of the State and the State may so enter.

(f) The Contractor agrees to comply with the regulations referred to in this Section as they exist on the date of this Contract and as they may be adopted or amended from time to time during the term of this Contract and any amendments thereto.

(g) (1) The Contractor agrees and warrants that in the performance of the Contract such Contractor will not discriminate or permit discrimination against any person or group of persons on the grounds of sexual orientation, in any manner prohibited by the laws of the United States or the State of Connecticut, and that employees are treated when employed without regard to their sexual orientation; (2) the Contractor agrees to provide each labor union or representative of workers with which such Contractor has a collective bargaining Agreement or other contract or understanding and each vendor with which such Contractor has a contract or understanding, a notice to be provided by the Commission on Human Rights and Opportunities advising the labor union or workers' representative of the Contractor's commitments under this section, and to post copies of the notice in conspicuous places available to employees and applicants for employment; (3) the Contractor agrees to comply with each provision of this section and with each regulation or relevant order issued by said Commission pursuant to Connecticut General Statutes § 46a-56;

and (4) the Contractor agrees to provide the Commission on Human Rights and Opportunities with such information requested by the Commission, and permit access to pertinent books, records and accounts, concerning the employment practices and procedures of the Contractor which relate to the provisions of this Section and Connecticut General Statutes § 46a-56.

(h) The Contractor shall include the provisions of the foregoing paragraph in every subcontract or purchase order entered into in order to fulfill any obligation of a contract with the State and such provisions shall be binding on a subcontractor, vendor or manufacturer unless exempted by regulations or orders of the Commission. The Contractor shall take such action with respect to any such subcontract or purchase order as the Commission may direct as a means of enforcing such provisions including sanctions for noncompliance in accordance with Connecticut General Statutes § 46a-56; provided, if such Contractor becomes involved in, or is threatened with, litigation with a subcontractor or vendor as a result of such direction by the Commission, the Contractor may request the State of Connecticut to enter into any such litigation or negotiation prior thereto to protect the interests of the State and the State may so enter."

The Nondiscrimination Certifications can be found at the Office of Policy and Management website.

http://www.ct.gov/opm/cwp/view.asp?a=2982&Q=390928

9. Whistleblower Provision

The following clause is applicable if the Contract has a value of Five Million Dollars ($5,000,000) or more.

Whistleblowing. This Contract may be subject to the provisions of Section 4-61dd of the Connecticut General Statutes. In accordance with this statute, if an officer, employee or appointing authority of the Contractor takes or threatens to take any personnel action against any employee of the Contractor in retaliation for such employee's disclosure of information to any employee of the contracting state or quasi-public agency or the Auditors of Public Accounts or the Attorney General under the provisions of subsection (a) of such statute, the Contractor shall be liable for a civil penalty of not more than five thousand dollars for each offense, up to a maximum of twenty per cent of the value of this Contract. Each violation shall be a separate and distinct offense and in the case of a continuing violation, each calendar day's continuance of the violation shall be deemed to be a separate and distinct offense. The State may request that the Attorney General bring a civil action in the Superior Court for the Judicial District of Hartford to seek imposition and recovery of such civil penalty. In accordance with subsection (f) of such statute, each large state contractor, as defined in the statute, shall post a notice of the provisions of the statute relating to large state contractors in a conspicuous place which is readily available for viewing by the employees of the Contractor.

10. Connecticut Freedom of Information Act

(a) Disclosure of Records. This Contract may be subject to the provisions of section 1-218 of the Connecticut General Statutes. In accordance with this statute, each contract in excess of two million five hundred thousand dollars between a public agency and a person for the performance of a governmental function shall (a) provide that the public agency is entitled to receive a copy of records and files related to the performance of the governmental function, and (b) indicate that such records and files are subject to FOIA and may be disclosed by the public agency pursuant to FOIA. No request to inspect or copy such records or files shall be valid unless the request is made to the public agency in accordance with FOIA. Any complaint by a person who is denied the right to inspect or copy such records or files shall be brought to the Freedom of Information Commission in accordance with the provisions of sections 1-205 and 1-206 of the Connecticut General Statutes.

(b) Confidential Information. The State will afford due regard to the Contractor's request for the protection of proprietary or confidential information which the State receives from the Contractor. However, all materials associated with the Contract are subject to the terms of the FOIA and all corresponding rules, regulations and interpretations. In making such a request, the Contractor may not merely state generally that the materials are proprietary or confidential in nature and not, therefore, subject to release to third parties. Those particular sentences, paragraphs, pages or sections that the Contractor believes are exempt from disclosure under the FOIA must be specifically identified as such. Convincing explanation and rationale sufficient to justify each exemption consistent with the FOIA must accompany the request. The rationale and explanation must be stated in terms of the prospective harm to the competitive position of the Contractor that would result if the identified material were to be released and the reasons why the materials are legally exempt from release pursuant to the FOIA. To the extent that any other provision or part of the Contract conflicts or is in any way inconsistent with this section, this section controls and shall apply and the conflicting provision or part shall not be given effect. If the Contractor indicates that certain documentation is submitted in confidence, by specifically and clearly marking the documentation as "CONFIDENTIAL," DOT will first review the Contractor's claim for consistency with the FOIA (that is, review that the documentation is actually a trade secret or commercial or financial information and not required by statute), and if determined to be consistent, will endeavor to keep such information confidential to the extent permitted by law. See, *e.g.*, Conn. Gen. Stat. §1-210(b)(5)(A-B). The State, however, has no obligation to initiate, prosecute or defend any legal proceeding or to seek a protective order or other similar relief to prevent disclosure of any information that is sought pursuant to a FOIA request. Should the State withhold such documentation from a Freedom of Information requester and a complaint be brought to the Freedom of Information Commission, the Contractor shall have the burden of cooperating with DOT in defense of that action and in terms of establishing the availability of any FOIA exemption in any proceeding where it is an issue. In no event shall the State have any liability for the disclosure of any documents or information in its possession which the State believes are required to be disclosed pursuant to the FOIA or other law.

11. Service of Process

The Contractor, if not a resident of the State of Connecticut, or, in the case of a partnership, the partners, if not residents, hereby appoints the Secretary of State of the State of Connecticut, and his successors in office, as agent for service of process for any action arising out of or as a result of this Contract; such appointment to be in effect throughout the life of this Contract and six (6) years thereafter.

12. Substitution of Securities for Retainages on State Contracts and Subcontracts

This Contract is subject to the provisions of Section 3-ll2a of the General Statutes of the State of Connecticut, as revised.

13. Health Insurance Portability and Accountability Act of 1996 (HIPAA)

The Contractor shall comply, if applicable, with the Health Insurance Portability and Accountability Act of 1996 and, pursuant thereto, the provisions attached at Exhibit C, and hereby made part of this Contract.

14. Forum and Choice of Law

Forum and Choice of Law. The parties deem the Contract to have been made in the City of Hartford, State of Connecticut. Both parties agree that it is fair and reasonable for the validity and construction of the Contract to be, and it shall be, governed by the laws and court decisions of the State of Connecticut, without giving effect to its principles of conflicts of laws. To the extent that any immunities provided by Federal law or the laws of the State of Connecticut do not bar an action against the State, and to the extent that these courts are courts of competent jurisdiction, for the purpose of venue, the complaint shall be made returnable to the Judicial District of Hartford only or shall be brought in the United States District Court for the District of Connecticut only, and shall not be transferred to any other court, provided, however, that nothing here constitutes a waiver or compromise of the sovereign immunity of the State of Connecticut. The Contractor waives any objection which it may now have or will have to the laying of venue of any Claims in any forum and further irrevocably submits to such jurisdiction in any suit, action or proceeding.

15. Summary of State Ethics Laws

Pursuant to the requirements of section 1-101qq of the Connecticut General Statutes, the summary of State ethics laws developed by the State Ethics Commission pursuant to section 1-81b of the Connecticut General Statutes is incorporated by reference into and made a part of the Contract as if the summary had been fully set forth in the Contract.

16. Audit and Inspection of Plants, Places of Business and Records

(a) The State and its agents, including, but not limited to, the Connecticut Auditors of Public Accounts, Attorney General and State's Attorney and their respective agents, may, at reasonable hours, inspect and examine all of the parts of the Contractor's and Contractor Parties' plants and places of business which, in any way, are related to, or involved in, the performance of this Contract. For the purposes of this Section, "Contractor Parties" means the Contractor's members, directors, officers, shareholders, partners, managers, principal officers, representatives, agents, servants, consultants, employees or any one of them or any other person or entity with whom the Contractor is in privity of oral or written contract and the Contractor intends for such other person or entity to Perform under the Contract in any capacity.

(b) The Contractor shall maintain, and shall require each of the Contractor Parties to maintain, accurate and complete Records. The Contractor shall make all of its and the Contractor Parties' Records available at all reasonable hours for audit and inspection by the State and its agents.

(c) The State shall make all requests for any audit or inspection in writing and shall provide the Contractor with at least twenty-four (24) hours' notice prior to the requested audit and inspection date. If the State suspects fraud or other abuse, or in the event of an emergency, the State is not obligated to provide any prior notice.

(d) The Contractor shall keep and preserve or cause to be kept and preserved all of its and Contractor Parties' Records until three (3) years after the latter of (i) final payment under this Agreement, or (ii) the expiration or earlier termination of this Agreement, as the same may be modified for any reason. The State may request an audit or inspection at any time during this period. If any Claim or audit is started before the expiration of this period, the Contractor shall retain or cause to be retained all Records until all Claims or audit findings have been resolved.

(e) The Contractor shall cooperate fully with the State and its agents in connection with an audit or inspection. Following any audit or inspection, the State may conduct and the Contractor shall cooperate with an exit conference.

(f) The Contractor shall incorporate this entire Section verbatim into any contract or other agreement that it enters into with any Contractor Party.

17.Campaign Contribution Restriction

For all State contracts, defined in Conn. Gen. Stat. §9-612(f)(1) as having a value in a calendar year of $50,000 or more, or a combination or series of such agreements or contracts having a value of $100,000 or more, the authorized signatory to this contract expressly acknowledges receipt of the State Elections Enforcement Commission's notice advising state contractors of state campaign contribution and solicitation prohibitions, and will inform its principals of the contents of the notice, as set forth in "Notice to Executive Branch State Contractors and Prospective State Contractors of Campaign Contribution and Solicitation Limitations," a copy of which is attached hereto and hereby made a part of this contract, attached as Exhibit D.

18. Tangible Personal Property

(a) The Contractor on its behalf and on behalf of its Affiliates, as defined below, shall comply with the provisions of Conn. Gen. Stat. §12-411b, as follows:

(1) For the term of the Contract, the Contractor and its Affiliates shall collect and remit to the State of Connecticut, Department of Revenue Services, any Connecticut use tax due under the provisions of Chapter 219 of the Connecticut General Statutes for items of tangible personal property sold by the Contractor or by any of its Affiliates in the same manner as if the Contractor and such Affiliates were engaged in the business of selling tangible personal property for use in Connecticut and had sufficient nexus under the provisions of Chapter 219 to be required to collect Connecticut use tax;
(2) A customer's payment of a use tax to the Contractor or its Affiliates relieves the customer of liability for the use tax;
(3) The Contractor and its Affiliates shall remit all use taxes they collect from customers on or before the due date specified in the Contract, which may not be later than the last day of the month next succeeding the end of a calendar quarter or other tax collection period during which the tax was collected;
(4) The Contractor and its Affiliates are not liable for use tax billed by them but not paid to them by a customer; and
(5) Any Contractor or Affiliate who fails to remit use taxes collected on behalf of its customers by the due date specified in the Contract shall be subject to the interest and penalties provided for persons required to collect sales tax under chapter 219 of the general statutes.

(b) For purposes of this section of the Contract, the word "Affiliate" means any person, as defined in section 12-1 of the general statutes, that controls, is controlled by, or is under common control with another person. A person controls another person if the person owns, directly or indirectly, more than ten per cent of the voting securities of the other person. The word "voting security" means a security that confers upon the holder the right to vote for the election of members of the board of directors or similar governing body of the business, or that is convertible into, or entitles the holder to receive, upon its exercise, a security that confers such a right to vote. "Voting security" includes a general partnership interest.

(c) The Contractor represents and warrants that each of its Affiliates has vested in the Contractor plenary authority to so bind the Affiliates in any agreement with the State of Connecticut. The Contractor on its own behalf and on behalf of its Affiliates shall also provide, no later than 30 days after receiving a request by the State's contracting authority, such information as the State may require to ensure, in the State's sole determination, compliance with the provisions of Chapter 219 of the Connecticut General Statutes, including, but not limited to, §12-411b.

19. Bid Rigging and/or Fraud – Notice to Contractor

The Connecticut Department of Transportation is cooperating with the U.S. Department of Transportation and the Justice Department in their investigation into highway construction contract bid rigging and/or fraud.

A toll-free "HOT LINE" telephone number 800-424-9071 has been established to receive information from contractors, subcontractors, manufacturers, suppliers or anyone with knowledge of bid rigging and/or fraud, either past or current. The "HOT LINE" telephone number will be available during normal working hours (8:00 am – 5:00 pm EST). Information will be treated confidentially and anonymity respected.

20. Consulting Agreement Affidavit

The Contractor shall comply with Connecticut General Statutes Section 4a-81(a) and 4a-81(b), as revised. Pursuant to Public Act 11-229, after the initial submission of the form, if there is a change in the information contained in the form, a contractor shall submit the updated form, as applicable, either (i) not later than thirty (30) days after the effective date of such change or (ii) prior to execution of any new contract, whichever is earlier.

The Affidavit/Form may be submitted in written format or electronic format through the Department of Administrative Services (DAS) website.

EXHIBIT A

TITLE VI CONTRACTOR ASSURANCES

During the performance of this Contract, the contractor, for itself, its assignees and successors in interest (hereinafter referred to as the "Contractor") agrees as follows:

1. **Compliance with Regulations:** The Contractor shall comply with the regulations relative to nondiscrimination in federally assisted programs of the United States Department of Transportation (hereinafter, "USDOT"), Title 49, Code of Federal Regulations, Part 21, as they may be amended from time to time (hereinafter referred to as the "Regulations"), which are herein incorporated by reference and made a part of this contract.

2. **Nondiscrimination:** The Contractor, with regard to the work performed by it during the Contract, shall not discriminate on the grounds of race, color, national origin, sex, age, or disability in the selection and retention of subcontractors, including procurements of materials and leases of equipment. The Contractor shall not participate either directly or indirectly in the discrimination prohibited by Subsection 5 of the Regulations, including employment practices when the Contract covers a program set forth in Appendix B of the Regulations.

3. **Solicitations for Subcontracts, Including Procurements of Materials and Equipment:**
In all solicitations either by competitive bidding or negotiation made by the Contractor for work to be performed under a subcontract, including procurements of materials or leases of equipment, each potential subcontractor or supplier shall be notified by the Contractor of the Contractor's obligations under this contract and the Regulations relative to nondiscrimination on the grounds of race, color, national origin, sex, age, or disability.

4. **Information and Reports:** The Contractor shall provide all information and reports required by the Regulations or directives issued pursuant thereto and shall permit access to its books, records, accounts, other sources of information, and its facilities as may be determined by the Connecticut Department of Transportation (ConnDOT) or the Funding Agency (FHWA, FTA and FAA) to be pertinent to ascertain compliance with such Regulations, orders, and instructions. Where any information required of a Contractor is in the exclusive possession of another who fails or refuses to furnish this information, the Contractor shall so certify to ConnDOT or the Funding Agency, as appropriate, and shall set forth what efforts it has made to obtain the information.

5. **Sanctions for Noncompliance:** In the event of the Contractor's noncompliance with the nondiscrimination provisions of this Contract, the ConnDOT shall impose such sanctions as it or the Funding Agency may determine to be appropriate, including, but not limited to:

A. Withholding contract payments until the Contractor is in-compliance; and/or
B. Cancellation, termination, or suspension of the Contract, in whole or in part.

6. **Incorporation of Provisions:** The Contractor shall include the provisions of paragraphs 1 through 5 in every subcontract, including procurements of materials and leases of equipment, unless exempt by the Regulations or directives issued pursuant thereto. The Contractor shall take such action with respect to any subcontract or procurement as the ConnDOT or the Funding Agency may -direct as a means of enforcing such provisions including sanctions for noncompliance. Provided, however, that in the event a Contractor becomes involved in, or is threatened with, litigation with a subcontractor or supplier as a result of such direction, the Contractor may request the ConnDOT to enter into such litigation to protect the interests of the Funding Agency, and, in addition, the Contractor may request the United States to enter into such litigation to protect the interests of the United States

EXHIBIT B

CONTRACTOR WORKFORCE UTILIZATION / EQUAL EMPLOYMENT OPPORTUNITY

1. **Project Workforce Utilization Goals:**
   These goals are applicable to all the Contractor's construction work (whether or not it is Federal or Federally assisted or funded) performed in the covered area. If the contractor performs construction work in a geographical area located outside of the covered area, it shall apply the goals established for the geographical area where the work is actually performed.

   Whenever the Contractor, or any Subcontractor at any tier, subcontracts a portion of the work involving any construction trade, it shall physically include in each subcontract in excess of $10,000 the provisions of these specifications which contain the applicable goals for minority and female participation.

   The goals for minority and female utilization are expressed in percentage terms for the contractor's aggregate work-force in each trade on all construction work in the covered area, are referenced in the Appendix A below.

STATE FUNDED PROJECTS (only)
APPENDIX A
(Labor Market Goals)

LABOR MARKET AREA GOAL				***Minority***
Female				
Bridgeport				**14%**
6.9%				
Ansonia	Beacon Falls	Bridgeport	Derby	
Easton	Fairfield	Milford	Monroe	
Oxford	Seymour	Shelton	Stratford	
Trumbull				
Danbury				**4%**
6.9%				
Bethel	Bridgewater	Brookfield	Danbury	
Kent	New Fairfield	New Milford	Newtown	
Redding	Ridgefield	Roxbury	Sherman	
Washington				
Danielson				**2%**
6.9%				
Brooklyn	Eastford	Hampton	Killingly	
Pomfret	Putnam	Scotland	Sterling	
Thompson	Voluntown	Union	Woodstock	
Hartford				**15%**
6.9%				

Andover	Ashford	Avon	Barkhamsted
Belin	Bloomfield	Bolton	Bristol
Burlington	Canton	Chaplin	Colchester
Columbia	Coventry	Cromwell	Durham
East Granby	East Haddam	East Hampton	East Hartford
East Windsor	Ellington	Enfield	Farmington
Glastonbury	Granby	Haddam	Hartford
Harwinton	Hebron	Lebanon	Manchester
Mansfield	Marlborough	Middlefield	Middletown
Newington	Plainville	Plymouth	Portland
Rocky Hill	Simsbury	Somers	South Windsor
Southington	Stafford	Suffield	Tolland
Vernon	West Hartford	Wethersfield	Willington
Winchester	Windham	Windsor	Windsor Locks

Lower River **2%**
6.9%

Chester	Deep River	Essex	Old Lyme
Westbrook			

New Haven **14%**
6.9%

Bethany	Branford	Cheshire	Clinton
East Haven	Guilford	Hamden	Killingworth
Madison	Meriden	New Haven	North Branford
North Haven	Orange	Wallingford	West Haven
Woodbridge			

New London **8%**
6.9%

Bozrah	Canterbury	East Lyme	Franklin
Griswold	Groton	Ledyard	Lisbon
Montville	New London	North Stonington	Norwich
Old Lyme	Old Saybrook	Plainfield	Preston
Salem	Sprague	Stonington	Waterford
Hopkinton	RI – Westerly Rhode Island		

Stamford **17%**
6.9%

Darien	Greenwich	New Canaan	Norwalk
Stamford	Weston	Westport	Wilton

Torrington **2%**
6.9%

Canaan	Colebrook	Cornwall	Goshen
Hartland	Kent	Litchfield	Morris
Norfolk	North Canaan	Salisbury	Sharon
Torrington	Warren		

Waterbury 6.9%				**10%**
Bethlehem	Middlebury	Naugatuck	Prospect	
Southbury	Thomaston	Waterbury	Watertown	
Wolcott	Woodbury			

EXHIBIT C

Health Insurance Portability and Accountability Act of 1996 ("HIPAA").

(a) If the Contactor is a Business Associate under the requirements of the Health Insurance Portability and Accountability Act of 1996 ("HIPAA"), the Contractor must comply with all terms and conditions of this Section of the Contract. If the Contractor is not a Business Associate under HIPAA, this Section of the Contract does not apply to the Contractor for this Contract.

(b) The Contractor is required to safeguard the use, publication and disclosure of information on all applicants for, and all clients who receive, services under the Contract in accordance with all applicable federal and state law regarding confidentiality, which includes but is not limited to HIPAA, more specifically with the Privacy and Security Rules at 45 C.F.R. Part 160 and Part 164, subparts A, C, and E; and

(c) The State of Connecticut Agency named on page 1 of this Contract (hereinafter the "Department") is a "covered entity" as that term is defined in 45 C.F.R. § 160.103; and

(d) The Contractor, on behalf of the Department, performs functions that involve the use or disclosure of "individually identifiable health information," as that term is defined in 45 C.F.R. § 160.103; and

(e) The Contractor is a "business associate" of the Department, as that term is defined in 45 C.F.R. § 160.103; and

(f) The Contractor and the Department agree to the following in order to secure compliance with the HIPAA, the requirements of Subtitle D of the Health Information Technology for Economic and Clinical Health Act (hereinafter the HITECH Act), (Pub. L. 111-5, sections 13400 to 13423), and more specifically with the Privacy and Security Rules at 45 C.F.R. Part 160 and Part 164, subparts A, C, and E.

(g) Definitions

(1) "Breach shall have the same meaning as the term is defined in section 13400 of the HITECH Act (42 U.S.C. §17921(1))

(2) "Business Associate" shall mean the Contractor.

(3) "Covered Entity" shall mean the Department of the State of Connecticut named on page 1 of this Contract.

(4) "Designated Record Set" shall have the same meaning as the term "designated record set" in 45 C.F.R. § 164.501.

(5) "Electronic Health Record" shall have the same meaning as the term is defined in section 13400 of the HITECH Act (42 U.S.C. §17921(5))

(6) "Individual" shall have the same meaning as the term "individual"' in 45 C.F.R. § 160.103 and shall include a person who qualifies as a personal representative as defined in 45 C.F.R. § 164.502(g).

(7) "Privacy Rule" shall mean the Standards for Privacy of Individually Identifiable Health Information at 45 C.F.R. part 160 and parts 164, subparts A and E.

(8) "Protected Health Information" or "PHI" shall have the same meaning as the term "protected health information" in 45 C.F.R. § 160.103, limited to information created or received by the Business Associate from or on behalf of the Covered Entity.

(9) "Required by Law"' shall have the same meaning as the term "required by law" in 45 C.F.R. § 164.103.

(10) "Secretary" shall mean the Secretary of the Department of Health and Human Services or his designee.

(11) "More stringent" shall have the same meaning as the term "more stringent" in 45 C.F.R. § 160.202.

(12) "This Section of the Contract" refers to the HIPAA Provisions stated herein, in their entirety.

(13) "Security Incident" shall have the same meaning as the term "security incident" in 45 C.F.R.§ 164.304.

(14) "Security Rule" shall mean the Security Standards for the Protection of Electronic Protected Health Information at 45 C.F.R. part 160 and parts 164, subpart A and C.

(15) "Unsecured protected health information" shall have the same meaning as the term as defined in section 13402(h)(1)(A) of HITECH. Act. (42 U.S.C. §17932(h)(1)(A)).

(h) Obligations and Activities of Business Associates.

(1) Business Associate agrees not to use or disclose PHI other than as permitted or required by this Section of the Contract or as Required by Law.

(2) Business Associate agrees to use appropriate safeguards to prevent use or disclosure of PHI other than as provided for in this Section of the Contract.

(3) Business Associate agrees to use administrative, physical and technical safeguards that reasonably and appropriately protect the confidentiality, integrity, and availability of electronic protected health information that it creates, receives, maintains, or transmits on behalf of the Covered Entity.

(4) Business Associate agrees to mitigate, to the extent practicable, any harmful effect that is known to the Business Associate of a use or disclosure of PHI by Business Associate in violation of this Section of the Contract.

(5) Business Associate agrees to report to Covered Entity any use or disclosure of PHI not provided for by this Section of the Contract or any security incident of which it becomes aware.

(6) Business Associate agrees to insure that any agent, including a subcontractor, to whom it provides PHI received from, or created or received by Business Associate, on behalf of the Covered Entity, agrees to the same restrictions and conditions that apply through this Section of the Contract to Business Associate with respect to such information.

(7) Business Associate agrees to provide access, at the request of the Covered Entity, and in the time and manner agreed to by the parties, to PHI in a Designated Record Set, to Covered Entity or, as directed by Covered Entity, to an Individual in order to meet the requirements under 45 C.F.R. § 164.524.

(8) Business Associate agrees to make any amendments to PHI in a Designated Record Set that the Covered Entity directs or agrees to pursuant to 45 C.F.R. § 164.526 at the request of the Covered Entity, and in the time and manner agreed to by the parties.

(9) Business Associate agrees to make internal practices, books, and records, including policies and procedures and PHI, relating to the use and disclosure of PHI received from, or created or received by, Business Associate on behalf of Covered Entity, available to Covered Entity or to the Secretary in a time and manner agreed to by the parties or designated by the Secretary, for purposes of the Secretary determining Covered Entity's compliance with the Privacy Rule.

(10) Business Associate agrees to document such disclosures of PHI and information related to such disclosures as would be required for Covered Entity to respond to a request by an Individual for an accounting of disclosures of PHI in accordance with 45 C.F.R. § 164.528 and section 13405 of the HITECH Act (42 U.S.C. § 17935) and any regulations promulgated thereunder.

(11) Business Associate agrees to provide to Covered Entity, in a time and manner agreed to by the parties, information collected in accordance with clause h. (10) of this Section of the Contract, to permit Covered Entity to respond to a request by an Individual for an accounting of disclosures of PHI in accordance with 45 C.F.R. § 164.528 and section 13405 of the HITECH Act (42 U.S.C. § 17935) and any regulations promulgated thereunder. Business Associate agrees at the Covered Entity's direction to provide an accounting of disclosures of PHI directly to an individual in accordance with 45 C.F.R. § 164.528 and section 13405 of the HITECH Act (42 U.S.C. § 17935) and any regulations promulgated thereunder.

(12) Business Associate agrees to comply with any state or federal law that is more stringent than the Privacy Rule.

(13) Business Associate agrees to comply with the requirements of the HITECH Act relating to privacy and security that are applicable to the Covered Entity and with the requirements of 45 C.F.R. sections 164.504(e), 164.308, 164.310, 164.312, and 164.316.

(14) In the event that an individual requests that the Business Associate (a) restrict disclosures of PHI; (b) provide an accounting of disclosures of the individual's PHI; or (c) provide a copy of the individual's PHI in an electronic health record, the Business Associate agrees to notify the covered entity, in writing, within two business days of the request.

(15) Business Associate agrees that it shall not, directly or indirectly, receive any remuneration in exchange for PHI of an individual without (1) the written approval of the covered entity, unless receipt of remuneration in exchange for PHI is expressly authorized by this Contract and (2) the valid authorization of the individual, except for the purposes provided under section 13405(d)(2) of the HITECH Act,(42 U.S.C. § 17935(d)(2)) and in any accompanying regulations

(16) Obligations in the Event of a Breach

A. The Business Associate agrees that, following the discovery of a breach of unsecured protected health information, it shall notify the Covered Entity of such breach in accordance with the requirements of section 13402 of HITECH (42 U.S.C. 17932(b) and the provisions of this Section of the Contract.
B. Such notification shall be provided by the Business Associate to the Covered Entity without unreasonable delay, and in no case later than 30 days after the breach is discovered by the Business Associate, except as otherwise instructed in writing by a law enforcement official pursuant to section 13402 (g) of HITECH (42 U.S.C. 17932(g)) . A breach is considered discovered as of the first day on which it is, or reasonably should have been, known to the Business Associate. The notification shall include the identification and last known address, phone number and email address of each individual (or the next of kin of the individual if the individual is deceased) whose unsecured protected health information has been, or is reasonably believed by the Business Associate to have been, accessed, acquired, or disclosed during such breach.
C. The Business Associate agrees to include in the notification to the Covered Entity at least the following information:
    1. A brief description of what happened, including the date of the breach and the date of the discovery of the breach, if known.

    2. A description of the types of unsecured protected health information that were involved in the breach (such as full name, Social Security number, date of birth, home address, account number, or disability code).

    3. The steps the Business Associate recommends that individuals take to protect themselves from potential harm resulting from the breach.

    4. A detailed description of what the Business Associate is doing to investigate the breach, to mitigate losses, and to protect against any further breaches.

    5. Whether a law enforcement official has advised either verbally or in writing the Business Associate that he or she has determined that notification or notice to

individuals or the posting required under section 13402 of the HITECH Act would impede a criminal investigation or cause damage to national security and; if so, include contact information for said official.

D. Business Associate agrees to provide appropriate staffing and have established procedures to ensure that individuals informed by the Covered Entity of a breach by the Business Associate have the opportunity to ask questions and contact the Business Associate for additional information regarding the breach. Such procedures shall include a toll-free telephone number, an e-mail address, a posting on its Web site and a postal address. Business Associate agrees to include in the notification of a breach by the Business Associate to the Covered Entity, a written description of the procedures that have been established to meet these requirements. Costs of such contact procedures will be borne by the Contractor.

E. Business Associate agrees that, in the event of a breach, it has the burden to demonstrate that it has complied with all notifications requirements set forth above, including evidence demonstrating the necessity of a delay in notification to the Covered Entity.

(i) Permitted Uses and Disclosure by Business Associate.

(1) General Use and Disclosure Provisions Except as otherwise limited in this Section of the Contract, Business Associate may use or disclose PHI to perform functions, activities, or services for, or on behalf of, Covered Entity as specified in this Contract, provided that such use or disclosure would not violate the Privacy Rule if done by Covered Entity or the minimum necessary policies and procedures of the Covered Entity.

(2) Specific Use and Disclosure Provisions

(A) Except as otherwise limited in this Section of the Contract, Business Associate may use PHI for the proper management and administration of Business Associate or to carry out the legal responsibilities of Business Associate.

(B) Except as otherwise limited in this Section of the Contract, Business Associate may disclose PHI for the proper management and administration of Business Associate, provided that disclosures are Required by Law, or Business Associate obtains reasonable assurances from the person to whom the information is disclosed that it will remain confidential and used or further disclosed only as Required by Law or for the purpose for which it was disclosed to the person, and the person notifies Business Associate of any instances of which it is aware in which the confidentiality of the information has been breached.

(C) Except as otherwise limited in this Section of the Contract, Business Associate may use PHI to provide Data Aggregation services to Covered Entity as permitted by 45 C.F.R. § 164.504(e)(2)(i)(B).

(j) Obligations of Covered Entity.

(1) Covered Entity shall notify Business Associate of any limitations in its notice of privacy practices of Covered Entity, in accordance with 45 C.F.R. § 164.520, or to the extent that such limitation may affect Business Associate's use or disclosure of PHI.

(2) Covered Entity shall notify Business Associate of any changes in, or revocation of, permission by Individual to use or disclose PHI, to the extent that such changes may affect Business Associate's use or disclosure of PHI.

(3) Covered Entity shall notify Business Associate of any restriction to the use or disclosure of PHI that Covered Entity has agreed to in accordance with 45 C.F.R. § 164.522, to the extent that such restriction may affect Business Associate's use or disclosure of PHI.

(k) Permissible Requests by Covered Entity. Covered Entity shall not request Business Associate to use or disclose PHI in any manner that would not be permissible under the Privacy Rule if done by the Covered Entity, except that Business Associate may use and disclose PHI for data aggregation, and management and administrative activities of Business Associate, as permitted under this Section of the Contract.

(l) Term and Termination.

(1) Term. The Term of this Section of the Contract shall be effective as of the date the Contract is effective and shall terminate when the information collected in accordance with clause h. (10) of this Section of the Contract is provided to the Covered Entity and all of the PHI provided by Covered Entity to Business Associate, or created or received by Business Associate on behalf of Covered Entity, is destroyed or returned to Covered Entity, or, if it is infeasible to return or destroy PHI, protections are extended to such information, in accordance with the termination provisions in this Section.

(2) Termination for Cause Upon Covered Entity's knowledge of a material breach by Business Associate, Covered Entity shall either:

(A) Provide an opportunity for Business Associate to cure the breach or end the violation and terminate the Contract if Business Associate does not cure the breach or end the violation within the time specified by the Covered Entity; or

(B) Immediately terminate the Contract if Business Associate has breached a material term of this Section of the Contract and cure is not possible; or

(C) If neither termination nor cure is feasible, Covered Entity shall report the violation to the Secretary.

(3) Effect of Termination

(A) Except as provided in (l)(2) of this Section of the Contract, upon termination of this Contract, for any reason, Business Associate shall return or destroy all PHI received from Covered Entity, or created or received by Business Associate on behalf of Covered Entity. Business Associate shall also provide the information collected in accordance with clause h. (10) of this Section of the Contract to the Covered Entity

within ten business days of the notice of termination. This provision shall apply to PHI that is in the possession of subcontractors or agents of Business Associate. Business Associate shall retain no copies of the PHI.

(B) In the event that Business Associate determines that returning or destroying the PHI is infeasible, Business Associate shall provide to Covered Entity notification of the conditions that make return or destruction infeasible. Upon documentation by Business Associate that return or destruction of PHI is infeasible, Business Associate shall extend the protections of this Section of the Contract to such PHI and limit further uses and disclosures of PHI to those purposes that make return or destruction infeasible, for as long as Business Associate maintains such PHI. Infeasibility of the return or destruction of PHI includes, but is not limited to, requirements under state or federal law that the Business Associate maintains or preserves the PHI or copies thereof.

(m) Miscellaneous Provisions.

(1) Regulatory References. A reference in this Section of the Contract to a section in the Privacy Rule means the section as in effect or as amended.

(2) Amendment. The Parties agree to take such action as in necessary to amend this Section of the Contract from time to time as is necessary for Covered Entity to comply with requirements of the Privacy Rule and the Health Insurance Portability and Accountability Act of 1996, Pub. L. No. 104-191.

(3) Survival. The respective rights and obligations of Business Associate shall survive the termination of this Contract.

(4) Effect on Contract. Except as specifically required to implement the purposes of this Section of the Contract, all other terms of the Contract shall remain in force and effect.

(5) Construction. This Section of the Contract shall be construed as broadly as necessary to implement and comply with the Privacy Standard. Any ambiguity in this Section of the Contract shall be resolved in favor of a meaning that complies, and is consistent with, the Privacy Standard.

(6) Disclaimer. Covered Entity makes no warranty or representation that compliance with this Section of the Contract will be adequate or satisfactory for Business Associate's own purposes. Covered Entity shall not be liable to Business Associate for any claim, civil or criminal penalty, loss or damage related to or arising from the unauthorized use or disclosure of PHI by Business Associate or any of its officers, directors, employees, contractors or agents, or any third party to whom Business Associate has disclosed PHI contrary to the provisions of this Contract or applicable law. Business Associate is solely responsible for all decisions made, and actions taken, by Business Associate regarding the safeguarding, use and disclosure of PHI within its possession, custody or control.

(7) Indemnification. The Business Associate shall indemnify and hold the Covered Entity harmless from and against any and all claims, liabilities, judgments, fines, assessments, penalties, awards and any statutory damages that may be imposed or assessed pursuant to HIPAA, as amended or the

HITECH Act, including, without limitation, attorney's fees, expert witness fees, costs of investigation, litigation or dispute resolution, and costs awarded thereunder, relating to or arising out of any violation by the Business Associate and its agents, including subcontractors, of any obligation of Business Associate and its agents, including subcontractors, under this section of the contract, under HIPAA, the HITECH Act, the Privacy Rule and the Security Rule.

Notice to Executive Branch State Contractors and Prospective State Contractors of Campaign Contribution and Solicitation Limitations

This notice is provided under the authority of Connecticut General Statutes §9-612(g)(2), as amended by P.A. 10-1, and is for the purpose of informing state contractors and prospective state contractors of the following law (italicized words are defined on the reverse side of this page).

CAMPAIGN CONTRIBUTION AND SOLICITATION LIMITATIONS

No *state contractor, prospective state contractor, principal of a state contractor or principal of a prospective state contractor*, with regard to a *state contract* or *state contract solicitation* with or from a state agency in the executive branch or a quasi-public agency or a holder, or principal of a holder of a valid prequalification certificate, shall make a contribution to (i) an exploratory committee or candidate committee established by a candidate for nomination or election to the office of Governor, Lieutenant Governor, Attorney General, State Comptroller, Secretary of the State or State Treasurer, (ii) a political committee authorized to make contributions or expenditures to or for the benefit of such candidates, or (iii) a party committee (which includes town committees).

In addition, no holder or principal of a holder of a valid prequalification certificate, shall make a contribution to (i) an exploratory committee or candidate committee established by a candidate for nomination or election to the office of State senator or State representative, (ii) a political committee authorized to make contributions or expenditures to or for the benefit of such candidates, or (iii) a party committee.

On and after January 1, 2011, no state contractor, prospective state contractor, principal of a state contractor or principal of a prospective state contractor, with regard to a state contract or state contract solicitation with or from a state agency in the executive branch or a quasi-public agency or a holder, or principal of a holder of a valid prequalification certificate, shall **knowingly** *solicit* contributions from the state contractor's or prospective state contractor's employees or from a *subcontractor* or *principals of the subcontractor* on behalf of (i) an exploratory committee or candidate committee established by a candidate for nomination or election to the office of Governor, Lieutenant Governor, Attorney General, State Comptroller, Secretary of the State or State Treasurer, (ii) a political committee authorized to make contributions or expenditures to or for the benefit of such candidates, or (iii) a party committee.

DUTY TO INFORM

State contractors and prospective state contractors are required to inform their principals of the above prohibitions, as applicable, and the possible penalties and other consequences of any violation thereof.

PENALTIES FOR VIOLATIONS

Contributions or solicitations of contributions made in violation of the above prohibitions may result in the following civil and criminal penalties:

Civil penalties—Up to $2,000 or twice the amount of the prohibited contribution, whichever is greater, against a principal or a contractor. Any state contractor or prospective state contractor which fails to make reasonable efforts to comply with the provisions requiring notice to its principals of these prohibitions and the possible consequences of their violations may also be subject to civil penalties of up to $2,000 or twice the amount of the prohibited contributions made by their principals.

Criminal penalties—Any knowing and willful violation of the prohibition is a Class D felony, which may subject the violator to imprisonment of not more than 5 years, or not more than $5,000 in fines, or both.

CONTRACT CONSEQUENCES

In the case of a state contractor, contributions made or solicited in violation of the above prohibitions may resulting the contract being voided.

In the case of a prospective state contractor, contributions made or solicited in violation of the above prohibitions shall result in the contract described in the state contract solicitation not being awarded to the prospective state contractor, unless the State Elections Enforcement Commission determines that mitigating circumstances exist concerning such violation.

The State shall not award any other state contract to anyone found in violation of the above prohibitions for a period of one year after the election for which such contribution is made or solicited, unless the State Elections Enforcement Commission determines that mitigating circumstances exist concerning such violation.
Additional information may be found on the website of the State Elections Enforcement Commission, www.ct.gov/seec. Click on the link to “Lobbyist/Contractor Limitations.”

DEFINITIONS

"State contractor" means a person, business entity or nonprofit organization that enters into a state contract. Such person, business entity or nonprofit organization shall be deemed to be a state contractor until December thirty-first of the year in which such contract terminates. "State contractor" does not include a municipality or any other political subdivision of the state, including any entities or associations duly created by the municipality or political subdivision exclusively amongst themselves to further any purpose authorized by statute or charter, or an employee in the executive or legislative branch of state government or a quasi-public agency, whether in the classified or unclassified service and full or part-time, and only in such person's capacity as a state or quasi-public agency employee.

"Prospective state contractor" means a person, business entity or nonprofit organization that (i) submits a response to a state contract solicitation by the state, a state agency or a quasi-public agency, or a proposal in response to a request for proposals by the state, a state agency or a quasi-public agency, until the contract has been entered into, or (ii) holds a valid prequalification certificate issued by the Commissioner of Administrative Services under section 4a-100. "Prospective state contractor" does not include a municipality or any other political subdivision of the state, including any entities or associations duly created by the municipality or political subdivision exclusively amongst themselves to further any purpose authorized by statute or charter, or an employee in the executive or legislative branch of state government or a quasi-public agency, whether in the classified or unclassified service and full or part-time, and only in such person's capacity as a state or quasi-public agency employee.

"Principal of a state contractor or prospective state contractor" means (i) any individual who is a member of the board of directors of, or has an ownership interest of five per cent or more in, a state contractor or prospective state contractor, which is a business entity, except for an individual who is a member of the board of directors of a nonprofit organization**,** (ii) an individual who is employed by a state contractor or prospective state contractor, which is a business entity, as president, treasurer or executive vice president, (iii) an individual who is the chief executive officer of a state contractor or prospective state contractor, which is not a business entity, or if a state contractor or prospective state contractor has no such officer, then the officer who duly possesses comparable powers and duties, (iv) an officer or an employee of any state contractor or prospective state contractor who has *managerial or discretionary responsibilities with respect to a state contract*, (v) the spouse or a *dependent child* who is eighteen years of age or older of an individual described in this subparagraph, or (vi) a political committee established or controlled by an individual described in this subparagraph or the business entity or nonprofit organization that is the state contractor or prospective state contractor.

"State contract" means an agreement or contract with the state or any state agency or any quasi-public agency, let through a procurement process or otherwise, having a value of fifty thousand dollars or more, or a combination or series of such agreements or contracts having a value of one hundred thousand dollars or more in a calendar year, for (i) the rendition of services, (ii) the furnishing of any goods, material, supplies, equipment or any items of any kind, (iii) the construction, alteration or repair of any public building or public work, (iv) the acquisition, sale or lease of any land or building, (v) a licensing arrangement, or (vi) a grant, loan or loan guarantee. "State contract" does not include any agreement or contract with the state, any state agency or any quasi-public agency that is exclusively federally funded, an education loan, a loan to an individual for other than commercial purposes or any agreement or contract between the state or any state agency and the United States Department of the Navy or the United States Department of Defense.

"State contract solicitation" means a request by a state agency or quasi-public agency, in whatever form issued, including, but not limited to, an invitation to bid, request for proposals, request for information or request for quotes, inviting bids, quotes or other types of submittals, through a competitive procurement process or another process authorized by law waiving competitive procurement.

"Managerial or discretionary responsibilities with respect to a state contract" means having direct, extensive and substantive responsibilities with respect to the negotiation of the state contract and not peripheral, clerical or ministerial responsibilities.

"Dependent child" means a child residing in an individual's household who may legally be claimed as a dependent on the federal income tax of such individual.

"Solicit" means (A) requesting that a contribution be made, (B) participating in any fund-raising activities for a candidate committee, exploratory committee, political committee or party committee, including, but not limited to, forwarding tickets to potential contributors, receiving contributions for transmission to any such committee or bundling contributions, (C) serving as chairperson, treasurer or deputy treasurer of any such committee, or (D) establishing a political committee for the sole purpose of soliciting or receiving contributions for any committee. Solicit does not include: (i) making a contribution that is otherwise permitted by Chapter 155 of the Connecticut General Statutes; (ii) informing any person of a position taken by a candidate for public office or a public official, (iii) notifying the person of any activities of, or contact information for, any candidate for public office; or (iv) serving as a member in any party committee or as an officer of such committee that is not otherwise prohibited in this section.

"Subcontractor" means any person, business entity or nonprofit organization that contracts to perform part or all of the obligations of a state contractor's state contract. Such person, business entity or nonprofit organization shall be deemed to be a subcontractor until December thirty first of the year in which the subcontract terminates. "Subcontractor" does not include (i) a municipality or any other political subdivision of the state, including any entities or associations duly created by the municipality or political subdivision exclusively amongst themselves to further any purpose authorized by statute or charter, or (ii) an employee in the executive or legislative branch of state government or a quasi-public agency, whether in the classified or unclassified service and full or part-time, and only in such person's capacity as a state or quasi-public agency employee.

"Principal of a subcontractor" means (i) any individual who is a member of the board of directors of, or has an ownership interest of five per cent or more in, a subcontractor, which is a business entity, except for an individual who is a member of the board of directors of a nonprofit organization, (ii) an individual who is employed by a subcontractor, which is a business entity, as president, treasurer or executive vice president, (iii) an individual who is the chief executive officer of a subcontractor, which is not a business entity, or if a subcontractor has no such officer, then the officer who duly possesses comparable powers and duties, (iv) an officer or an employee of any subcontractor who has managerial or discretionary responsibilities with respect to a subcontract with a state contractor, (v) the spouse or a dependent child who is eighteen years of age or older of an individual described in this subparagraph, or (vi) a political committee established or controlled by an individual described in this subparagraph or the business entity or nonprofit organization that is the subcontractor.

EXHIBIT E

(state wages will be inserted here)

Project: Litchfield Maintenance Facility Tank Replacement

Minimum Rates and Classifications for Building Construction

ID# : B 22896

Connecticut Department of Labor
Wage and Workplace Standards Division

By virtue of the authority vested in the Labor Commissioner under provisions of Section 31-53 of the General Statutes of Connecticut, as amended, the following are declared to be the prevailing rates and welfare payments and will apply only where the contract is advertised for bid within 20 days of the date on which the rates are established. Any contractor or subcontractor not obligated by agreement to pay to the welfare and pension fund shall pay this amount to each employee as part of his/her hourly wages.

Project Number:

Project Town: Litchfield

State#: 73-190

FAP#:

Project: Litchfield Maintenance Facility Tank Replacement

CLASSIFICATION	Hourly Rate	Benefits
1a) Asbestos Worker/Insulator (Includes application of insulating materials, protective coverings, coatings, & finishes to all types of mechanical systems; application of firestopping material for wall openings & penetrations in walls, floors, ceilings	35.75	28.82
1b) Asbestos/Toxic Waste Removal Laborers: Asbestos removal and encapsulation (except its removal from mechanical systems which are not to be scrapped), toxic waste removers, blasters.**See Laborers Group 7**		
1c) Asbestos Worker/Heat and Frost Insulator	37.15	27.56

As of: **Tuesday, November 29, 2016**

Project: Litchfield Maintenance Facility Tank Replacement

2) Boilermaker	35.24	25.01
3a) Bricklayer, Cement Mason, Concrete Finisher (including caulking), Stone Masons	33.48	29.16 + a
3b) Tile Setter	34.30	24.15
3c) Terrazzo Mechanics and Marble Setters	31.69	22.35
3d) Tile, Marble & Terrazzo Finishers	26.43	20.59
3e) Plasterer	33.48	29.16

As of: **Tuesday, November 29, 2016**

Project: Litchfield Maintenance Facility Tank Replacement

4) Group 1: Laborers (common or general), acetylene burners, carpenter tenders, concrete specialists, wrecking laborers, fire watchers.	28.55	18.90
4a) Group 2: Mortar mixers, plaster tender, power buggy operators, powdermen, fireproofer/mixer/nozzleman (Person running mixer and spraying fireproof only).	28.80	18.90
4b) Group 3: Jackhammer operators/pavement breaker, mason tender (brick), mason tender (cement/concrete), forklift operators and forklift operators (masonry).	29.05	18.90
4c) **Group 4: Pipelayers (Installation of water, storm drainage or sewage lines outside of the building line with P6, P7 license) (the pipelayer rate shall apply only to one or two employees of the total crew who primary task is to actually perform the mating of pipe sections) P6 and P7 rate is $26.80.	28.80	18.90
4d) Group 5: Air track operator, sand blaster and hydraulic drills.	29.30	18.90
4e) Group 6: Blasters, nuclear and toxic waste removal.	31.55	18.90

As of: **Tuesday, November 29, 2016**

Project: Litchfield Maintenance Facility Tank Replacement

4f) Group 7: Asbestos/lead removal and encapsulation (except it's removal from mechanical systems which are not to be scrapped).	29.55	18.90
4g) Group 8: Bottom men on open air caisson, cylindrical work and boring crew.	28.38	18.90
4h) Group 9: Top men on open air caisson, cylindrical work and boring crew.	27.86	18.90
4i) Group 10: Traffic Control Signalman	16.00	18.90
5) Carpenter, Acoustical Ceiling Installation, Soft Floor/Carpet Laying, Metal Stud Installation, Form Work and Scaffold Building, Drywall Hanging, Modular-Furniture Systems Installers, Lathers, Piledrivers, Resilient Floor Layers.	32.00	24.42
5a) Millwrights	32.47	24.84

As of: **Tuesday, November 29, 2016**

6) Electrical Worker (including low voltage wiring) (Trade License required: E1,2 L-5,6 C-5,6 T-1,2 L-1,2 V-1,2,7,8,9)	38.02	23.75+3% of gross wage
7a) Elevator Mechanic (Trade License required: R-1,2,5,6)	49.00	29.985+a+b
-----LINE CONSTRUCTION----		
Groundman	24.99	6.25%+11.81
Linemen/Cable Splicer	45.43	6.25%+20.70
8) Glazier (Trade License required: FG-1,2)	35.58	20.15 + a

9) Ironworker, Ornamental, Reinforcing, Structural, and Precast Concrete Erection	35.22	31.99 + a
----OPERATORS----		
Group 1: Crane handling or erecting structural steel or stone, hoisting engineer 2 drums or over, front end loader (7 cubic yards or over), work boat 26 ft. and over and Tunnel Boring Machines. (Trade License Required)	38.55	23.55 + a
Group 2: Cranes (100 ton rate capacity and over); Excavator over 2 cubic yards; Piledriver ($3.00 premium when operator controls hammer); Bauer Drill/Caisson. (Trade License Required)	38.23	23.55 + a
Group 3: Excavator; Backhoe/Excavator under 2 cubic yards; Cranes (under 100 ton rated capacity), Grader/Blade; Master Mechanic; Hoisting Engineer (all types of equipment where a drum and cable are used to hoist or drag material regardless of motive power of operation), Rubber Tire Excavator (Drott-1085 or similar);Grader Operator; Bulldozer Fine Grade. (slopes, shaping, laser or GPS, etc.). (Trade License Required)	37.49	23.55 + a
Group 4: Trenching Machines; Lighter Derrick; Concrete Finishing Machine; CMI Machine or Similar; Koehring Loader (Skooper).	37.10	23.55 + a

Project: Litchfield Maintenance Facility Tank Replacement

Group 5: Specialty Railroad Equipment; Asphalt Paver; Asphalt Reclaiming Machine; Line Grinder; Concrete Pumps; Drills with Self Contained Power Units; Boring Machine; Post Hole Digger; Auger; Pounder; Well Digger; Milling Machine (over 24" Mandrell)	36.51	23.55 + a
Group 5 continued: Side Boom; Combination Hoe and Loader; Directional Driller; Pile Testing Machine.	36.51	23.55 + a
Group 6: Front End Loader (3 up to 7 cubic yards); Bulldozer (rough grade dozer).	36.20	23.55 + a
Group 7: Asphalt roller, concrete saws and cutters (ride on types), vermeer concrete cutter, Stump Grinder; Scraper; Snooper; Skidder; Milling Machine (24" and under Mandrell).	35.86	23.55 + a
Group 8: Mechanic, grease truck operator, hydroblaster; barrier mover; power stone spreader; welding; work boat under 26 ft.; transfer machine.	35.46	23.55 + a
Group 9: Front end loader (under 3 cubic yards), skid steer loader regardless of attachments, (Bobcat or Similar): forklift, power chipper; landscape equipment (including Hydroseeder).	35.03	23.55 + a

As of: **Tuesday, November 29, 2016**

Group 10: Vibratory hammer; ice machine; diesel and air, hammer, etc.	32.99	23.55 + a
Group 11: Conveyor, earth roller, power pavement breaker (whiphammer), robot demolition equipment.	32.99	23.55 + a
Group 12: Wellpoint operator.	32.93	23.55 + a
Group 13: Compressor battery operator.	32.35	23.55 + a
Group 14: Elevator operator; tow motor operator (solid tire no rough terrain).	31.21	23.55 + a
Group 15: Generator Operator; Compressor Operator; Pump Operator; Welding Machine Operator; Heater Operator.	30.80	23.55 + a

As of: **Tuesday, November 29, 2016**

Project: Litchfield Maintenance Facility Tank Replacement

Group 16: Maintenance Engineer/Oiler.	30.15	23.55 + a
Group 17: Portable asphalt plant operator; portable crusher plant operator; portable concrete plant operator.	34.46	23.55 + a
Group 18: Power safety boat; vacuum truck; zim mixer; sweeper; (Minimum for any job requiring a CDL license).	32.04	23.55 + a
10a) Brush and Roller	32.02	20.15
10b) Taping Only/Drywall Finishing	32.77	20.15
10c) Paperhanger and Red Label	32.52	20.15

As of: **Tuesday, November 29, 2016**

10e) Blast and Spray	35.02	20.15
11) Plumber (excluding HVAC pipe installation) (Trade License required: P-1,2,6,7,8,9 J-1,2,3,4 SP-1,2)	40.62	29.71
12) Well Digger, Pile Testing Machine	33.01	19.40 + a
13) Roofer (composition)	34.12	18.58
14) Roofer (slate & tile)	34.62	18.58
15) Sheetmetal Worker (Trade License required for HVAC and Ductwork: SM-1,SM-2,SM-3,SM-4,SM-5,SM-6)	43.41	33.85

Project: Litchfield Maintenance Facility Tank Replacement

16) Pipefitter (Including HVAC work) (Trade License required: S-1,2,3,4,5,6,7,8 B-1,2,3,4 D-1,2,3,4, G-1, G-2, G-8 & G-9)	40.62	29.71
17a) 2 Axle	28.83	21.39 + a
17b) 3 Axle, 2 Axle Ready Mix	28.93	21.39 + a
17c) 3 Axle Ready Mix	28.98	21.39 + a
17d) 4 Axle, Heavy Duty Trailer up to 40 tons	29.03	21.39 + a
17e) 4 Axle Ready Mix	29.08	21.39 + a

As of: **Tuesday, November 29, 2016**

17f) Heavy Duty Trailer (40 Tons and Over)	29.28	21.39 + a
17g) Specialized Earth Moving Equipment (Other Than Conventional Type on-the-Road Trucks and Semi-Trailers, Including Euclids)	29.08	21.39 + a
18) Sprinkler Fitter (Trade License required: F-1,2,3,4)	41.37	20.77 + a
19) Theatrical Stage Journeyman	25.76	7.34

Project: Litchfield Maintenance Facility Tank Replacement

Welders: Rate for craft to which welding is incidental.

**Note: Hazardous waste removal work receives additional $1.25 per hour for truck drivers.*

***Note: Hazardous waste premium $3.00 per hour over classified rate*

ALL Cranes: When crane operator is operating equipment that requires a fully licensed crane operator to operate he receives an extra $3.00 premium in addition to the hourly wage rate and benefit contributions:

1) Crane handling or erecting structural steel or stone; hoisting engineer (2 drums or over)

2) Cranes (100 ton rate capacity and over) Bauer Drill/Caisson

3) Cranes (under 100 ton rated capacity)

Crane with 150 ft. boom (including jib) - $1.50 extra
Crane with 200 ft. boom (including jib) - $2.50 extra
Crane with 250 ft. boom (including jib) - $5.00 extra
Crane with 300 ft. boom (including jib) - $7.00 extra
Crane with 400 ft. boom (including jib) - $10.00 extra

All classifications that indicate a percentage of the fringe benefits must be calculated at the percentage rate times the "base hourly rate".

Apprentices duly registered under the Commissioner of Labor's regulations on "Work Training Standards for Apprenticeship and Training Programs" Section 31-51-d-1 to 12, are allowed to be paid the appropriate percentage of the prevailing journeymen hourly base and the full fringe benefit rate, providing the work site ratio shall not be less than one full-time journeyperson instructing and supervising the work of each apprentice in a specific trade.

The Prevailing wage rates applicable to this project are subject to annual adjustments each July 1st for the duration of the project.

Each contractor shall pay the annual adjusted prevailing wage rate that is in effect each July 1st, as posted by the Department of Labor.

It is the contractor's responsibility to obtain the annual adjusted prevailing wage rate increases directly from the Department of Labor's website.

The annual adjustments will be posted on the Department of Labor's Web page: www.ct.gov/dol. For those without internet access, please contact the division listed below.

The Department of Labor will continue to issue the initial prevailing wage rate schedule to the Contracting Agency for the project.

All subsequent annual adjustments will be posted on our Web Site for contractor access.

Contracting Agencies are under no obligation pursuant to State labor law to pay any increase due to the annual adjustment provision.

As of: **Tuesday, November 29, 2016**

Project: Litchfield Maintenance Facility Tank Replacement

Effective October 1, 2005 - Public Act 05-50: any person performing the work of any mechanic, laborer, or worker shall be paid prevailing wage

All Person who perform work ON SITE must be paid prevailing wage for the appropriate mechanic, laborer, or worker classification.

All certified payrolls must list the hours worked and wages paid to All Persons who perform work ON SITE regardless of their ownership i.e.: (Owners, Corporate Officers, LLC Members, Independent Contractors, et. al)

Reporting and payment of wages is required regardless of any contractual relationship alleged to exist between the contractor and such person.

~~Unlisted classifications needed for work not included within the scope of the classifications listed may be added after award only as provided in the labor standards contract clause (29 CFR 5.5 (a) (1) (ii)).

Please direct any questions which you may have pertaining to classification of work and payment of prevailing wages to the Wage and Workplace Standards Division, telephone (860)263-6790.

As of: **Tuesday, November 29, 2016**

Connecticut Department of Labor
Wage and Workplace Standards Division
FOOTNOTES

Please Note: If the "Benefits" listed on the schedule for the following occupations includes a letter(s) (+ a or + a+b for instance), refer to the information below.

Benefits to be paid at the appropriate prevailing wage rate for the listed occupation.

If the "Benefits" section for the occupation lists only a dollar amount, disregard the information below.

Bricklayers, Cement Masons, Cement Finishers, Concrete Finishers, Stone Masons
(Building Construction) and
(Residential- Hartford, Middlesex, New Haven, New London and Tolland Counties)

a. Paid Holiday: Employees shall receive 4 hours for Christmas Eve holiday provided the employee works the regularly scheduled day before and after the holiday. Employers may schedule work on Christmas Eve and employees shall receive pay for actual hours worked in addition to holiday pay.

Elevator Constructors: Mechanics

a. Paid Holidays: New Year's Day, Memorial Day, Independence Day, Labor Day, Veterans' Day, Thanksgiving Day, Christmas Day, plus the Friday after Thanksgiving.

b. Vacation: Employer contributes 8% of basic hourly rate for 5 years or more of service or 6% of basic hourly rate for 6 months to 5 years of service as vacation pay credit.

Glaziers

a. Paid Holidays: Labor Day and Christmas Day.

Power Equipment Operators
(Heavy and Highway Construction & Building Construction)

a. Paid Holidays: New Year's Day, Good Friday, Memorial day, Independence Day, Labor Day, Thanksgiving Day and Christmas Day, provided the employee works 3 days during the week in which the holiday falls, if scheduled, and if scheduled, the working day before and the working day after the holiday. Holidays falling on Saturday may be observed on Saturday, or if the employer so elects, on the preceding Friday.

Ironworkers

a. Paid Holiday: Labor Day provided employee has been on the payroll for the 5 consecutive work days prior to Labor Day.

Laborers (Tunnel Construction)

a. Paid Holidays: New Year's Day, Memorial Day, Independence Day, Labor Day, Thanksgiving Day and Christmas Day. No employee shall be eligible for holiday pay when he fails, without cause, to work the regular work day preceding the holiday or the regular work day following the holiday.

Roofers

a. Paid Holidays: July 4th, Labor Day, and Christmas Day provided the employee is employed 15 days prior to the holiday.

Sprinkler Fitters

a. Paid Holidays: Memorial Day, July 4th, Labor Day, Thanksgiving Day and Christmas Day, provided the employee has been in the employment of a contractor 20 working days prior to any such paid holiday.

Truck Drivers

(Heavy and Highway Construction & Building Construction)

a. Paid Holidays: New Year's Day, Memorial Day, Independence Day, Labor Day, Thanksgiving Day, Christmas day, and Good Friday, provided the employee has at least 31 calendar days of service and works the last scheduled day before and the first scheduled day after the holiday, unless excused.

Information Bulletin
Occupational Classifications

The Connecticut Department of Labor has the responsibility to properly determine "job classification" on prevailing wage projects covered under C.G.S. Section 31-53.

Note: This information is intended to provide a sample of some occupational classifications for guidance purposes only. It is not an all-inclusive list of each occupation's duties. This list is being provided only to highlight some areas where a contractor may be unclear regarding the proper classification.

Below are additional clarifications of specific job duties performed for certain classifications:

- **ASBESTOS WORKERS**

  Applies all insulating materials, protective coverings, coatings and finishes to all types of mechanical systems.

- **ASBESTOS INSULATOR**

  Handle, install apply, fabricate, distribute, prepare, alter, repair, dismantle, heat and frost insulation, including penetration and fire stopping work on all penetration fire stop systems.

- **BOILERMAKERS**

  Erects hydro plants, incomplete vessels, steel stacks, storage tanks for water, fuel, etc. Builds incomplete boilers, repairs heat exchanges and steam generators.

- **BRICKLAYERS, CEMENT MASONS, CEMENT FINISHERS, MARBLE MASONS, PLASTERERS, STONE MASONS, PLASTERERS. STONE MASONS, TERRAZZO WORKERS, TILE SETTERS**

  Lays building materials such as brick, structural tile and concrete cinder, glass, gypsum, terra cotta block. Cuts, tools and sets marble, sets stone, finishes concrete, applies decorative steel, aluminum and plastic tile, applies cements, sand, pigment and marble chips to floors, stairways, etc.

- **CARPENTERS, MILLWRIGHTS. PILEDRIVERMEN. LATHERS. RESILEINT FLOOR LAYERS, DOCK BUILDERS, DIKERS, DIVER TENDERS**

  Constructs, erects, installs and repairs structures and fixtures of wood, plywood and wallboard. Installs, assembles, dismantles, moves industrial machinery. Drives piling into ground to provide foundations for structures such as buildings and bridges, retaining walls for earth embankments, such as cofferdams. Fastens wooden, metal or rockboard lath to walls, ceilings and partitions of buildings, acoustical tile layer, concrete form builder. Applies firestopping materials on fire resistive joint systems only. Installation of curtain/window walls only where attached to wood or metal studs. Installation of insulated material of all types whether blown, nailed or attached in other ways to walls, ceilings and floors of buildings. Assembly and installation of modular furniture/furniture systems. Free-standing furniture is not covered. This includes free standing: student chairs, study top desks, book box desks, computer furniture, dictionary stand, atlas stand, wood shelving, two-position information access station, file cabinets, storage cabinets, tables, etc.

- **CLEANING LABORER**

  The clean up of any construction debris and the general cleaning, including sweeping, wash down, mopping, wiping of the construction facility, washing, polishing, dusting, etc., prior to the issuance of a certificate of occupancy falls under the *Labor classification.*

- **DELIVERY PERSONNEL**

  If delivery of supplies/building materials is to one common point and stockpiled there, prevailing wages are not required. If the delivery personnel are involved in the distribution of the material to multiple locations within the construction site then they would have to be paid prevailing wages for the type of work performed: laborer, equipment operator, electrician, ironworker, plumber, etc.

  An example of this would be where delivery of drywall is made to a building and the delivery personnel distribute the drywall from one "stockpile" location to further sub-locations on each floor. Distribution of material around a construction site is the job of a laborer/tradesman and not a delivery personnel.

- **ELECTRICIANS**

  Install, erect, maintenance, alteration or repair of any wire, cable, conduit, etc., which generates, transforms, transmits or uses electrical energy for light, heat, power or other purposes, including the Installation or maintenance of telecommunication, LAN wiring or computer equipment, and low voltage wiring. ***License required per Connecticut General Statutes: E-1,2 L-5,6 C-5,6 T-1,2 L-1,2 V-1,2,7,8,9.**

- **ELEVATOR CONSTRUCTORS**

  Install, erect, maintenance and repair of all types of elevators, escalators, dumb waiters and moving walks. ***License required by Connecticut General Statutes: R-1,2,5,6.**

- **FORK LIFT OPERATOR**

  Laborers Group 4) Mason Tenders - operates forklift solely to assist a mason to a maximum height of nine (9) feet only.

  Power Equipment Operator Group 9 - operates forklift to assist any trade, and to assist a mason to a height over nine (9) feet.

- **GLAZIERS**

  Glazing wood and metal sash, doors, partitions, and 2 story aluminum storefronts. Installs glass windows, skylights, store fronts and display cases or surfaces such as building fronts, interior walls, ceilings and table tops and metal store fronts. Installation of aluminum window walls and curtain walls is the "joint" work of glaziers and ironworkers which requires either a blended rate or equal composite workforce.

- **IRONWORKERS**

  Erection, installation and placement of structural steel, precast concrete, miscellaneous iron, ornamental iron, metal curtain wall, rigging and reinforcing steel. Handling, sorting, and installation of reinforcing steel (rebar). Metal bridge rail (traffic), metal bridge handrail, and decorative security fence installation. Installation of aluminum window walls and curtain walls is the "joint" work of glaziers and ironworkers which requires either a blended rate or equal composite workforce. Insulated metal and insulated composite panels are still installed by the Ironworker.

- **INSULATOR**

  Installing fire stopping systems/materials for "Penetration Firestop Systems": transit to cables, electrical conduits, insulated pipes, sprinkler pipe penetrations, ductwork behind radiation, electrical cable trays, fire rated pipe penetrations, natural polypropylene, HVAC ducts, plumbing bare metal, telephone and communication wires, and boiler room ceilings. Past practice using the applicable licensed trades, Plumber, Sheet Metal, Sprinkler Fitter, and Electrician, is not inconsistent with the Insulator classification and would be permitted.

- **LABORERS**

  Acetylene burners, asphalt rakers, chain saw operators, concrete and power buggy operator, concrete saw operator, fence and guard rail erector (except metal bridge rail (traffic), metal bridge handrail, and decorative security fence installation.), hand operated concrete vibrator operator, mason tenders, pipelayers (installation of storm drainage or sewage lines on the street only), pneumatic drill operator, pneumatic gas and electric drill operator, powermen and wagon drill operator, air track operator, block paver, curb setters, blasters, concrete spreaders.

- **PAINTERS**

  Maintenance, preparation, cleaning, blasting (water and sand, etc.), painting or application of any protective coatings of every description on all bridges and appurtenances of highways, roadways, and railroads. Painting, decorating, hardwood finishing, paper hanging, sign writing, scenic art work and drywall hhg for any and all types of building and residential work.

- **LEAD PAINT REMOVAL**

  Painter's Rate
  1. Removal of lead paint from bridges.
  2. Removal of lead paint as preparation of any surface to be repainted.
  3. Where removal is on a Demolition project prior to reconstruction.

  Laborer's Rate
  1. Removal of lead paint from any surface NOT to be repainted.
  2. Where removal is on a *TOTAL* Demolition project only.

- **PLUMBERS AND PIPEFITTERS**

  Installation, repair, replacement, alteration or maintenance of all plumbing, heating, cooling and piping. ***License required per Connecticut General Statutes: P-1,2,6,7,8,9 J-1,2,3,4 SP-1,2 S-1,2,3,4,5,6,7,8 B-1,2,3,4 D-1,2,3,4.***

- **POWER EQUIPMENT OPERATORS**

  Operates several types of power construction equipment such as compressors, pumps, hoists, derricks, cranes, shovels, tractors, scrapers or motor graders, etc. Repairs and maintains equipment. ***License required, crane operators only, per Connecticut General Statutes.**

- **ROOFERS**

  Covers roofs with composition shingles or sheets, wood shingles, slate or asphalt and gravel to waterproof roofs, including preparation of surface. (tear-off and/or removal of any type of roofing and/or clean-up of any and all areas where a roof is to be relaid)

- **SHEETMETAL WORKERS**

  Fabricate, assembles, installs and repairs sheetmetal products and equipment in such areas as ventilation, air-conditioning, warm air heating, restaurant equipment, architectural sheet metal work, sheetmetal roofing, and aluminum gutters. Fabrication, handling, assembling, erecting, altering, repairing, etc. of coated metal material panels and composite metal material panels when used on building exteriors and interiors as soffits, facia, louvers, partitions, wall panel siding, canopies, cornice, column covers, awnings, beam covers, cladding, sun shades, lighting troughs, spires, ornamental roofing, metal ceilings, mansards, copings, ornamental and ventilation hoods, vertical and horizontal siding panels, trim, etc. The sheet metal classification also applies to the vast variety of coated metal material panels and composite metal material panels that have evolved over the years as an alternative to conventional ferrous and non-ferrous metals like steel, iron, tin, copper, brass, bronze, aluminum, etc. Insulated metal and insulated composite panels are still installed by the Iron Worker. Fabrication, handling, assembling, erecting, altering, repairing, etc. of architectural metal roof, standing seam roof, composite metal roof, metal and composite bathroom/toilet partitions, aluminum gutters, metal and composite lockers and shelving, kitchen equipment, and walk-in coolers.

- **SPRINKLER FITTERS**

  Installation, alteration, maintenance and repair of fire protection sprinkler systems. ***License required per Connecticut General Statutes: F-1,2,3,4.**

- **TILE MARBLE AND TERRAZZO FINISHERS**

  Assists and tends the tile setter, marble mason and terrazzo worker in the performance of their duties.

- **TRUCK DRIVERS**

Definitions:

1) "Site of the work" (29 Code of Federal Regulations (CFR) 5.2(l)(b) is the physical place or places where the building or work called for in the contract will remain and any other site where a significant portion of the building or work is constructed, provided that such site is established specifically for the performance of the contact or project;

(a) Except as provided in paragraph (l) (3) of this section, job headquarters, tool yards, batch plants, borrow pits, etc. are part of the "site of the work"; provided they are dedicated exclusively, or nearly so, to the performance of the contract or project, and provided they are adjacent to "the site of work" as defined in paragraph (e)(1) of this section;

(b) Not included in the "site of the work" are permanent home offices, branch plant establishments, fabrication plants, tool yards etc, of a contractor or subcontractor whose location and continuance in operation are determined wholly without regard to a particular State or political subdivision contract or uncertain and indefinite periods of time involved of a few seconds or minutes duration and where the failure to count such time is due to consideration justified by industrial realities (29 CFR 785.47)

2) "Engaged to wait" is waiting time that belongs to and is controlled by the employer which is an integral part of the job and is therefore compensable as hours worked. (29 CFR 785.15)

3) "Waiting to be engaged" is waiting time that an employee can use effectively for their own purpose and is not compensable as hours worked. (29 CFR 785.16)

4) "De Minimus" is a rule that recognizes that unsubstantial or insignificant periods of time which cannot as a practical administrative matter be precisely recorded for payroll purposes, may be disregarded. This rule applies only where there are uncertain and indefinite periods of time involved of a short duration and where the failure to count such time is due to consideration justified by worksite realities. For example, with respect to truck drivers on prevailing wage sites, this is typically less than 15 minutes at a time.

Coverage of Truck Drivers on State or Political subdivision Prevailing Wage Projects

Truck drivers <u>are covered</u> for payroll purposes under the following conditions:

- Truck Drivers for time spent working on the site of the work.

- Truck Drivers for time spent loading and/or unloading materials and supplies on the site of the work, if such time is not de minimus

- Truck drivers transporting materials or supplies between a facility that is deemed part of the site of the work and the actual construction site.

- Truck drivers transporting portions of the building or work between a site established specifically for the performance of the contract or project where a significant portion of such building or work is constructed and the physical places where the building or work outlined in the contract will remain.

For example: Truck drivers delivering asphalt are covered under prevailing wage while" engaged to wait" on the site and when directly involved in the paving operation, provided the total time is not "de minimus"

Truck Drivers <u>are not</u> covered in the following instances:

- Material delivery truck drivers while off "the site of the work"

- Truck Drivers traveling between a prevailing wage job and a commercial supply facility while they are off the "site of the work"

- Truck drivers whose time spent on the "site of the work" is de minimus, such as under 15 minutes at a time, merely to drop off materials or supplies, including asphalt.

These guidelines are similar to U.S. Labor Department policies. The application of these guidelines may be subject to review based on factual considerations on a case by case basis.

For example:

- Material men and deliverymen are not covered under prevailing wage as long as they are not directly involved in the construction process. If, they unload the material, they would then be covered by prevailing wage for the classification they are performing work in: laborer, equipment operator, etc.
- Hauling material off site is not covered provided they are not dumping it at a location outlined above.
- Driving a truck on site and moving equipment or materials on site would be considered covered work, as this is part of the construction process.

Any questions regarding the proper classification should be directed to:
Public Contract Compliance Unit
Wage and Workplace Standards Division
Connecticut Department of Labor
200 Folly Brook Blvd, Wethersfield, CT 06109
(860) 263-6543

Statute 31-55a

Last Updated: June 02, 2008

- Special Notice -

To All State and Political Subdivisions,Their Agents, and Contractors

Connecticut General Statute 31-55a - Annual adjustments to wage rates by contractors doing state work.

Each contractor that is awarded a contract on or after October 1, 2002, for (1) the construction of a state highway or bridge that falls under the provisions of section 31-54 of the general statutes, or (2) the construction, remodeling, refinishing, refurbishing, rehabilitation, alteration or repair of any public works project that falls under the provisions of section 31-53 of the general statutes shall contact the Labor Commissioner on or before July first of each year, for the duration of such contract, to ascertain the prevailing rate of wages on an hourly basis and the amount of payment or contributions paid or payable on behalf of each mechanic, laborer or worker employed upon the work contracted to be done, and shall make any necessary adjustments to such prevailing rate of wages and such payment or contributions paid or payable on behalf of each such employee, effective each July first.

- The prevailing wage rates applicable to any contract or subcontract awarded on or after October 1, 2002 are subject to annual adjustments each July 1st for the duration of any project which was originally advertised for bids on or after October 1, 2002.
- Each contractor affected by the above requirement shall pay the annual adjusted prevailing wage rate that is in effect each July 1st, as posted by the Department of Labor.
- It is the ***contractor's*** responsibility to obtain the annual adjusted prevailing wage rate increases directly from the Department of Labor's Web Site. The annual adjustments will be posted on the Department of Labor Web page: www.ctdol.state.ct.us. For those without internet access, please contact the division listed below.
- The Department of Labor will continue to issue the initial prevailing wage rate schedule to the Contracting Agency for the project. All subsequent annual adjustments will be posted on our Web Site for contractor access.

Any questions should be directed to the Contract Compliance Unit, Wage and Workplace

Standards Division, Connecticut Department of Labor, 200 Folly Brook Blvd., Wethersfield, CT 06109 at (860)263-6790.

Workplace Laws

Published by the Connecticut Department of Labor, Project Management Office

November 29, 2006

Notice

To All Mason Contractors and Interested Parties Regarding Construction Pursuant to Section 31-53 of the Connecticut General Statutes (Prevailing Wage)

The Connecticut Labor Department Wage and Workplace Standards Division is empowered to enforce the prevailing wage rates on projects covered by the above referenced statute.

Over the past few years the Division has withheld enforcement of the rate in effect for workers who operate a forklift on a prevailing wage rate project due to a potential jurisdictional dispute.

The rate listed in the schedules and in our Occupational Bulletin (see enclosed) has been as follows:

Forklift Operator:

- **Laborers (Group 4) Mason Tenders -** operates forklift solely to assist a mason to a maximum height of nine feet only.

- **Power Equipment Operator (Group 9) -** operates forklift to assist any trade and to assist a mason to a height over nine feet.

The U.S. Labor Department conducted a survey of rates in Connecticut but it has not been published and the rate in effect remains as outlined in the above Occupational Bulletin.

Since this is a classification matter and not one of jurisdiction, effective January 1, 2007 the Connecticut Labor Department will enforce the rate on each schedule in accordance with our statutory authority.

Your cooperation in filing appropriate and accurate certified payrolls is appreciated.

Informational Bulletin

THE 10-HOUR OSHA CONSTRUCTION SAFETY AND HEALTH COURSE

(applicable to public building contracts entered into *on or after July 1, 2007,* where the total cost of all work to be performed is at least $100,000)

(1) This requirement was created by Public Act No. 06-175, which is codified in Section 31-53b of the Connecticut General Statutes (pertaining to the prevailing wage statutes);

(2) The course is required for public building construction contracts (projects funded in whole or in part by the state or any political subdivision of the state) entered into on or after July 1, 2007;

(3) It is required of private employees (not state or municipal employees) and apprentices who perform manual labor for a general contractor or subcontractor on a public building project where the total cost of all work to be performed is at least $100,000;

(4) The ten-hour construction course pertains to the ten-hour Outreach Course conducted in accordance with federal OSHA Training Institute standards, and, for telecommunications workers, a ten-hour training course conducted in accordance with federal OSHA standard, 29 CFR 1910.268;

(5) The internet website for the federal OSHA Training Institute is http://www.osha.gov/fso/ote/training/edcenters/fact_sheet.html;

(6) The statutory language leaves it to the contractor and its employees to determine who pays for the cost of the ten-hour Outreach Course;

(7) Within 30 days of receiving a contract award, a general contractor must furnish proof to the Labor Commissioner that all employees and apprentices performing manual labor on the project will have completed such a course;

(8) Proof of completion may be demonstrated through either: (a) the presentation of a *bona fide* student course completion card issued by the federal OSHA Training Institute; *or* (2) the presentation of documentation provided to an employee by a trainer certified by the Institute pending the actual issuance of the completion card;

(9) Any card with an issuance date more than 5 years prior to the commencement date of the construction project shall not constitute proof of compliance;

(10) Each employer shall affix a copy of the construction safety course completion card to the certified payroll submitted to the contracting agency in accordance with Conn. Gen. Stat. § 31-53(f) on which such employee's name first appears;

(11) Any employee found to be in non-compliance shall be subject to removal from the worksite if such employee does not provide satisfactory proof of course completion to the Labor Commissioner by the fifteenth day after the date the employee is determined to be in noncompliance;

(12) Any such employee who is determined to be in noncompliance may continue to work on a public building construction project for a maximum of fourteen consecutive calendar days while bringing his or her status into compliance;

(13) The Labor Commissioner may make complaint to the prosecuting authorities regarding any employer or agent of the employer, or officer or agent of the corporation who files a false certified payroll with respect to the status of an employee who is performing manual labor on a public building construction project;

(14) The statute provides the minimum standards required for the completion of a safety course by manual laborers on public construction contracts; any contractor can exceed these minimum requirements; and

(15) Regulations clarifying the statute are currently in the regulatory process, and shall be posted on the CTDOL website as soon as they are adopted in final form.

(16) Any questions regarding this statute may be directed to the Wage and Workplace Standards Division of the Connecticut Labor Department via the internet website of http://www.ctdol.state.ct.us/wgwkstnd/wgemenu.htm; or by telephone at (860)263-6790.

THE ABOVE INFORMATION IS PROVIDED EXCLUSIVELY AS AN EDUCATIONAL RESOURCE, AND IS NOT INTENDED AS A SUBSTITUTE FOR LEGAL INTERPRETATIONS WHICH MAY ULTMATELY ARISE CONCERNIG THE CONSTRUCTION OF THE STATUTE OR THE REGULATIONS.

Sec. 31-53b. **Construction safety and health course**. **Proof of completion required for employees on public building projects. Enforcement. Regulations**. (a) Each contract entered into on or after July 1, 2007, for the construction, remodeling, refinishing, refurbishing, rehabilitation, alteration or repair of any public building project by the state or any of its agents, or by an political subdivision of the state or any of its agents, where the total cost of all work to be performed by all contractors and subcontractors in connection with the contract is at least one hundred thousand dollars, shall contain a provision requiring that, not later than thirty days after the date such contract is awarded, each contractor furnish proof to the Labor Commissioner that all employees performing manual labor on or in such public building, pursuant to such contract, have completed a course of at least ten hours in duration in construction safety and health approved by the federal Occupational Safety and Health Administration or, in the case of telecommunications employees, have completed at least ten hours of training in accordance with 29 CFR 1910.268.

(b) Any employee required to complete a construction safety and health course required under subsection (a) of this section who has not completed the course shall be subject to removal from the worksite if the employee does not provide documentation of having completed such course by the fifteenth day after the date the employee is found to be in noncompliance. The Labor Commissioner or said commissioner's designee shall enforce this section.

(c) Not later than January 1, 2007, the Labor Commissioner shall adopt regulations, in accordance with the provisions of chapter 54, to implement the provisions of subsections (a) and (b) of this section. Such regulations shall require that the ten-hour construction safety and health courses required under subsection (a) of this section be conducted in accordance with federal Occupational Safety and Health Administration Training Institute standards, or in accordance with 29 CFR 1910.268, as appropriate. The Labor Commissioner shall accept as sufficient proof of compliance with the provisions of subsection (a) or (b) of this section a student course completion card issued by the federal Occupational Safety and Health Administration Training Institute, or such other proof of compliance said commissioner deems appropriate, dated no earlier than five years before the commencement date of such public works project.

(d) For the purposes of this section, "public building" means a structure, paid for in whole or in part with state funds, within a roof and within exterior walls or fire walls, designed for the housing, shelter, enclosure and support or employment of people, animals or property of any kind, including, but not limited to, sewage treatment plants and water treatment plants, "Public building" does not include site work, roads or bridges, rail lines, parking lots or underground water, sewer or drainage systems including pump houses or other utility systems.

CONNECTICUT DEPARTMENT OF LABOR
WAGE AND WORKPLACE STANDARDS DIVISION

CONTRACTORS WAGE CERTIFICATION FORM

I,_____of _____
Officer, Owner, Authorized Rep. Company Name

do hereby certify that the _____
Company Name

_____
Street

_____
City

and all of its subcontractors will pay all workers on the

_____
Project Name and Number

_____
Street and City

the wages as listed in the schedule of prevailing rates required for such project (a copy of which is attached hereto).

_____
Signed

Subscribed and sworn to before me this _____ day of _____,

_____
Notary Public

☞ Return to:

Connecticut Department of Labor
Wage & Workplace Standards Division
200 Folly Brook Blvd.
Wethersfield, CT 06109