F H W A REGION	STATE	TOWN	FED. AID PROJ. NO.	PROJ. NO.	YEAR	SHEET NUMBER
1	CONN.	STAMFORD		301-163	2016	02.03.045.A4

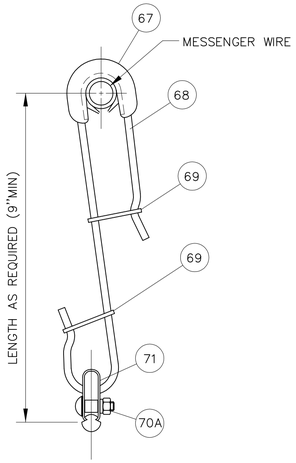

STANDARD CLIP HANGER
ASSEMBLY HA-1
(SEE NOTE 3)

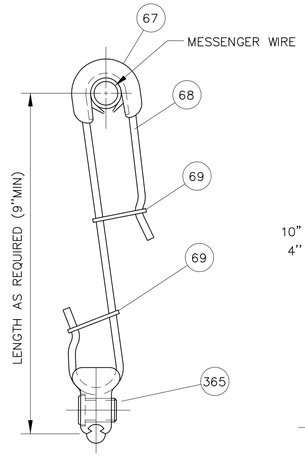

STANDARD HANGER
ASSEMBLY HA-2
(SEE NOTE 3)

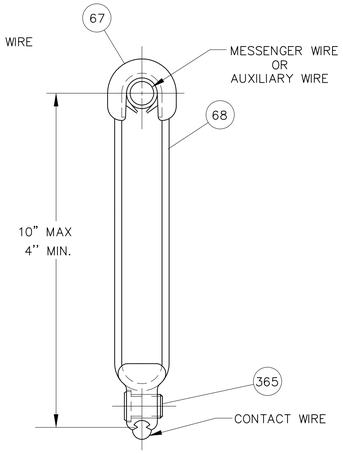

LOOP HANGER
ASSEMBLY LHA-3

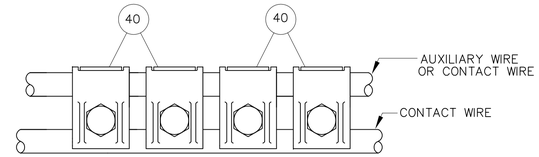

AUXILIARY CONTACT CLAMP
ASSEMBLY ACC-1

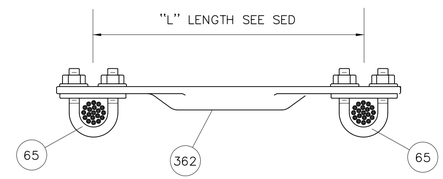

COMPRESSION MESSENGER WIRE KNUCKLE
ASSEMBLY MKA-9

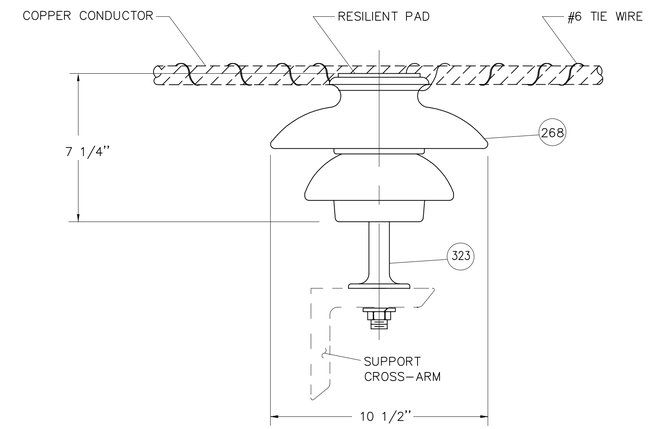

PIN INSULATOR ASSEMBLY 10B
(TYPICAL)

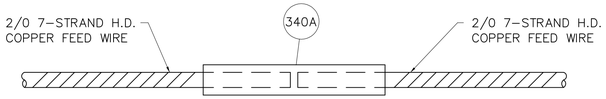

SIGNAL POWER WIRE SPLICE
ASSEMBLY SPS-1
FULL TENSION SPLICE
MINIMUM BREAKING LOAD = 5926 LBS

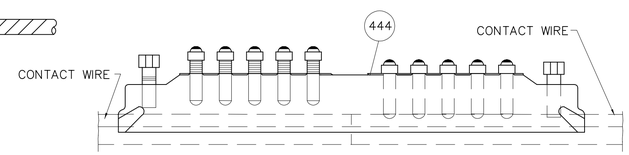

FULL TENSION SPLICE
MINIMUM BREAKING LOAD = 16410 LBS

TROLLEY WIRE SLEEVE
ASSEMBLY CWS-1

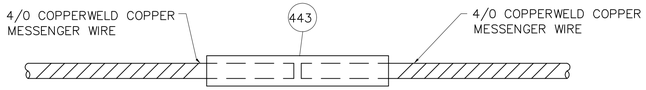

FULL TENSION SPLICE
MINIMUM BREAKING LOAD = 20730 LBS

MESSENGER WIRE SPLICE
ASSEMBLY MWS-1

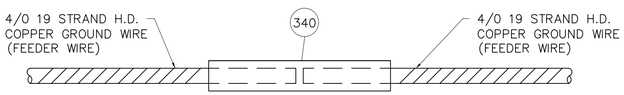

FULL TENSION SPLICE
MINIMUM BREAKING LOAD = 9617 LBS

GROUND WIRE SPLICE
ASSEMBLY GWS-1

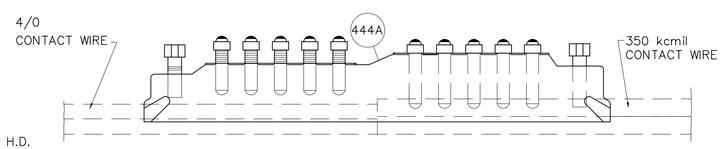

FULL TENSION SPLICE
4/0 MINIMUM BREAKING LOAD = 10820 LBS

COMPROMISE TROLLEY WIRE SPLICE
ASSEMBLY CTS-1

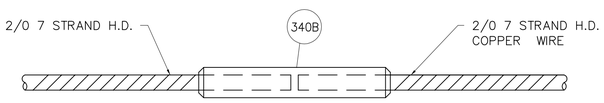

2/0 JUMPER SPLICE
ASSEMBLY FWS-1

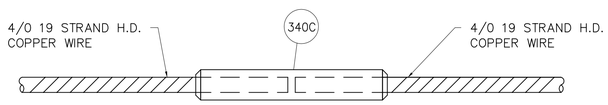

4/0 JUMPER SPLICE
ASSEMBLY FWS-2

ASSEMBLIES HA-1, HA-2, LHA-3,CWS-1,CTS-1,SPS-1,GWS-1,MWS-1,ACC-1,MKA-9 & 10B, FWS-1, FWS-2

PART No.	METRO-NORTH No.	DESCRIPTION	QTY PER ASSEMBLY												
			HA-1	HA-2	LHA-3	CWS-1	CTS-1	SPS-1	GWS-1	MWS-1	ACC-1	MKA-9	10B	FWS-1	FWS-2
40	10201624	TROLLEY CONTACT CLAMP	—	—	—	—	—	—	—	—	4	—	—	—	—
65	10100161	PRESSURE BAR ASSEMBLY	—	—	—	—	—	—	—	—	—	2	—	—	—
67	10100143	COPPER ARMOR WITH NEOPRENE LINER	1	1	1	—	—	—	—	—	—	—	—	—	—
68	10850050	3/16" STAINLESS STEEL ROD TYPE 304	AS REQ'D	AS REQ'D	AS REQ'D	—	—	—	—	—	—	—	—	—	—
69	10750166	HANGER RETAINER	2	2	—	—	—	—	—	—	—	—	—	—	—
70A		3/8" 16 UNC 1 1/8" BOLT W/NUT AND SPACER	1	—	—	—	—	—	—	—	—	—	—	—	—
71	10-434407	WIRE CLIP	1	—	—	—	—	—	—	—	—	—	—	—	—
268	10620750	35KV, PIN TYPE PORCELAIN INSULATOR	—	—	—	—	—	—	—	—	—	—	1	—	—
323	49493645	12" FORGED STEEL PIN FOR 35KV PIN INSULATOR	—	—	—	—	—	—	—	—	—	—	1	—	—
340	250905	GROUND WIRE SPLICE	—	—	—	—	—	—	1	—	—	—	—	—	—
340A		WIRE SPLICE	—	—	—	—	—	1	—	—	—	—	—	—	—
362		TUBE FOR FEEDER HANGER	—	—	—	—	—	—	—	—	—	FT	—	—	—
365		CONTACT WIRE CLAMP	—	1	1	—	—	—	—	—	—	—	—	—	—
443	10851619	MESSENGER WIRE SPLICE	—	—	—	—	—	—	—	1	—	—	—	—	—
444	10851626	TROLLEY WIRE SLEEVE 350	—	—	—	1	—	—	—	—	—	—	—	—	—
444A		COMPROMISE TROLLEY WIRE SPLICE 350 TO 4/0	—	—	—	—	1	—	—	—	—	—	—	—	—
340B		2/0 FEEDER TAIL WIRE SPLICE	—	—	—	—	—	—	—	—	—	—	—	1	—
340C		4/0 FEEDER TAIL WIRE SPLICE	—	—	—	—	—	—	—	—	—	—	—	—	1

NOTES:
1. LOOP HANGER SHALL BE UTILIZED AT TRANSITIONAL OVERLAPS.
2. USE TINNED CONNECTORS FOR CONNECTION TO ALUMINUM CONDUCTOR.
3. FOR THIS PROJECT, HA-2 HANGER ARE TO BE USED.

DESIGNED BY:
AECOM
AECOM
500 ENTERPRISE DRIVE
ROCKY HILL, CT 06067

STATE OF CONNECTICUT
TIMOTHY R. HOLLAND
No. 23797
LICENSED
PROFESSIONAL ENGINEER

Digitally signed by Timothy Holland
Date: 2017.05.15 10:20:01 -04'00'

URS CORPORATION AES
500 ENTERPRISE DRIVE
ROCKY HILL, CT 06067

THE INFORMATION, INCLUDING ESTIMATED QUANTITIES OF WORK SHOWN ON THESE SHEETS IS BASED ON LIMITED INVESTIGATIONS BY THE STATE AND IS IN NO WAY WARRANTED TO INDICATE THE TRUE CONDITIONS OR ACTUAL QUANTITIES OR DISTRIBUTION OF QUANTITIES OF WORK WHICH WILL BE REQUIRED.

AECOM
AECOM
500 ENTERPRISE DRIVE
ROCKY HILL, CT 06067
1-(860)-529-8882

SCALE: N.T.S.

NO.	DATE	DESCRIPTION
1	05/12/17	ADD. NO. 4 – HANGER LOCATIONS

REVISIONS

ADDENDUM NO. 4

STATE OF CONNECTICUT
DEPARTMENT OF TRANSPORTATION

STAMFORD CATENARY IMPROVEMENTS AND TRACK 7 EXTENSION

MISCELLANEOUS ASSEMBLIES
SHEET 4

ENGINEER: AECOM
DESIGNER: RW | DRAFTER: AMK | CHECKER: MR
APPROVED: T. HOLLAND | DATE: 12/07/16
STRUCTURE NO. | BRIDGE LOG NO. | STRUCTURE SHEET NO. E-17

100% DESIGN
DISK FILENAME: E-17_A04.dwg
PROJECT CONTROL DATE: 12/07/2016

F H W A REGION	STATE	TOWN	FED. AID PROJ. NO.	PROJ. NO.	YEAR	SHEET NUMBER
1	CONN.	STAMFORD		301-163	2016	02.03.047.A4

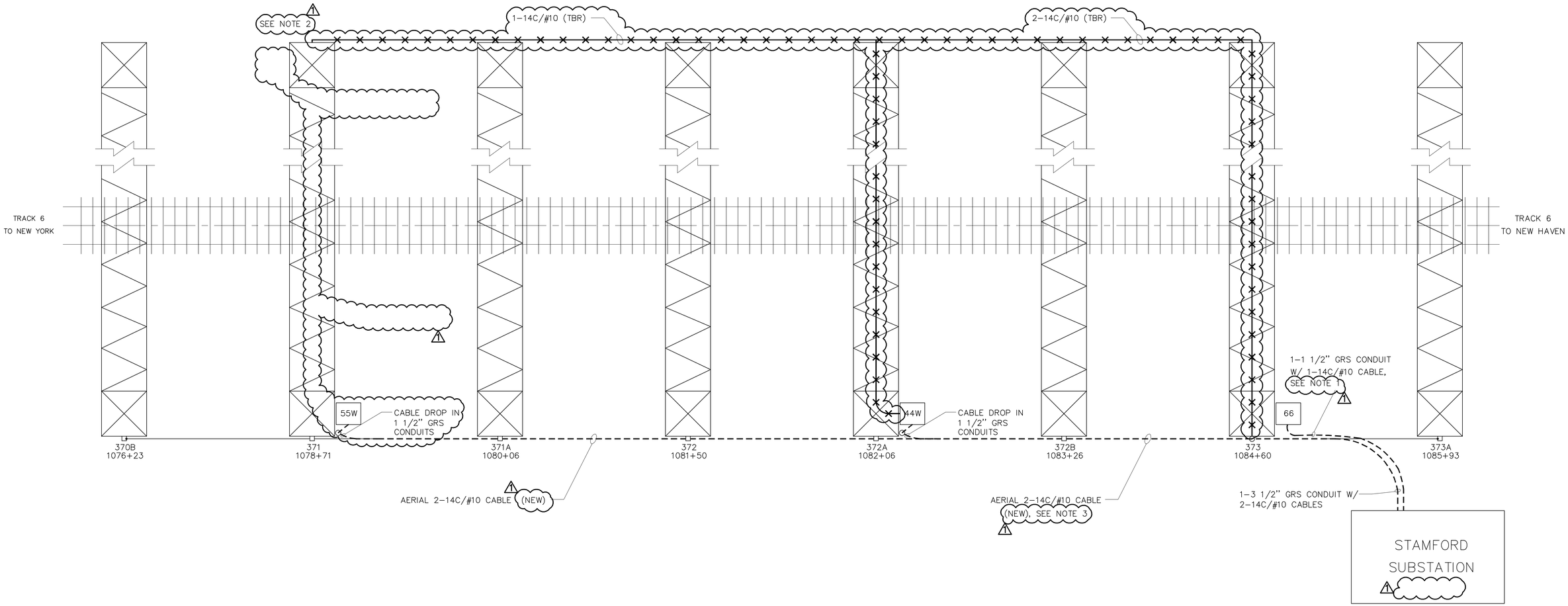

NOTES:

1. MOD SWITCH 66 ON STRUCTURE 373 AND ASSOCIATED CABLES AND CONDUITS ARE EXISTING AND NOT PART OF THIS CONTRACT.
2. REMOVAL OF EXISTING MOD SWITCH 55W ON NORTH SIDE OF EXISTING STRUCTURE 371 WILL BE PAID UNDER ITEM NO. 0099010A "REMOVAL OF ABANDONED RAILROAD EQUIPMENT". THIS WILL ALSO INCLUDE THE REMOVAL OF THE CONTROL CABLE FOR EXISTING MOD SWITCH 44W (WHICH WILL REMAIN) ON STRUCTURE 372A.
3. NEW CONTROL CABLE FOR EXISTING MOD SWITCH 44W WILL BE PAID UNDER ITEM NO.0096084A "MOTOR OPERATED DISCONNECT SWITCH".

LEGEND:

- CONTROL CABLE TO BE REMOVED.
- NEW CONTROL CABLES TO BE INSTALLED.

STATE OF CONNECTICUT
TIMOTHY R. HOLLAND
No. 22787
LICENSED
PROFESSIONAL ENGINEER

URS CORPORATION AES
500 ENTERPRISE DRIVE
ROCKY HILL, CT 06067

THE INFORMATION, INCLUDING ESTIMATED QUANTITIES OF WORK SHOWN ON THESE SHEETS IS BASED ON LIMITED INVESTIGATIONS BY THE STATE AND IS IN NO WAY WARRANTED TO INDICATE THE TRUE CONDITIONS OR ACTUAL QUANTITIES OR DISTRIBUTION OF QUANTITIES OF WORK WHICH WILL BE REQUIRED.

AECOM
AECOM
500 ENTERPRISE DRIVE
ROCKY HILL, CT 06067
1-(860)-529-8882

SCALE: N.T.S.

NO.	DATE	DESCRIPTION
1	05/12/17	ADD. NO. 4 – MOD LOCATION CHANGE

REVISIONS

ADDENDUM NO. 4

STATE OF CONNECTICUT
DEPARTMENT OF TRANSPORTATION

STAMFORD CATENARY IMPROVEMENTS AND TRACK 7 EXTENSION

CONDUIT AND CABLE PLAN FOR NEW MODS – STAM

ENGINEER: AECOM
DESIGNER: RW | DRAFTER: AMK | CHECKER: MR
APPROVED: T. HOLLAND | DATE: 12/07/16
STRUCTURE NO. | BRIDGE LOG NO. | STRUCTURE SHEET NO. E-57

PROJECT CONTROL DATE: 12/07/2016 DISK FILENAME: E-57_A04.dwg 100% DESIGN

F H W A REGION	STATE	TOWN	FED. AID PROJ. NO.	PROJ. NO.	YEAR	SHEET NUMBER
1	CONN.	STAMFORD		301-163	2016	02.03.050-1.A4

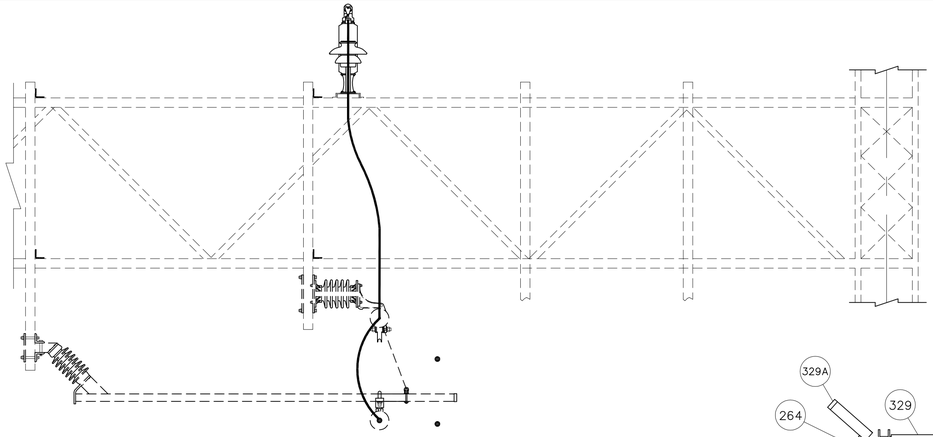

SECTION A-A

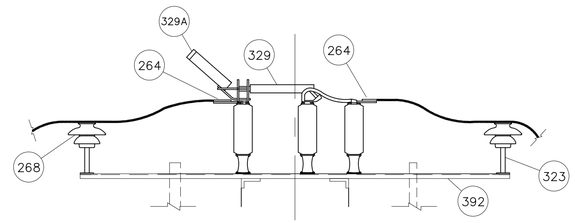

SECTION C-C

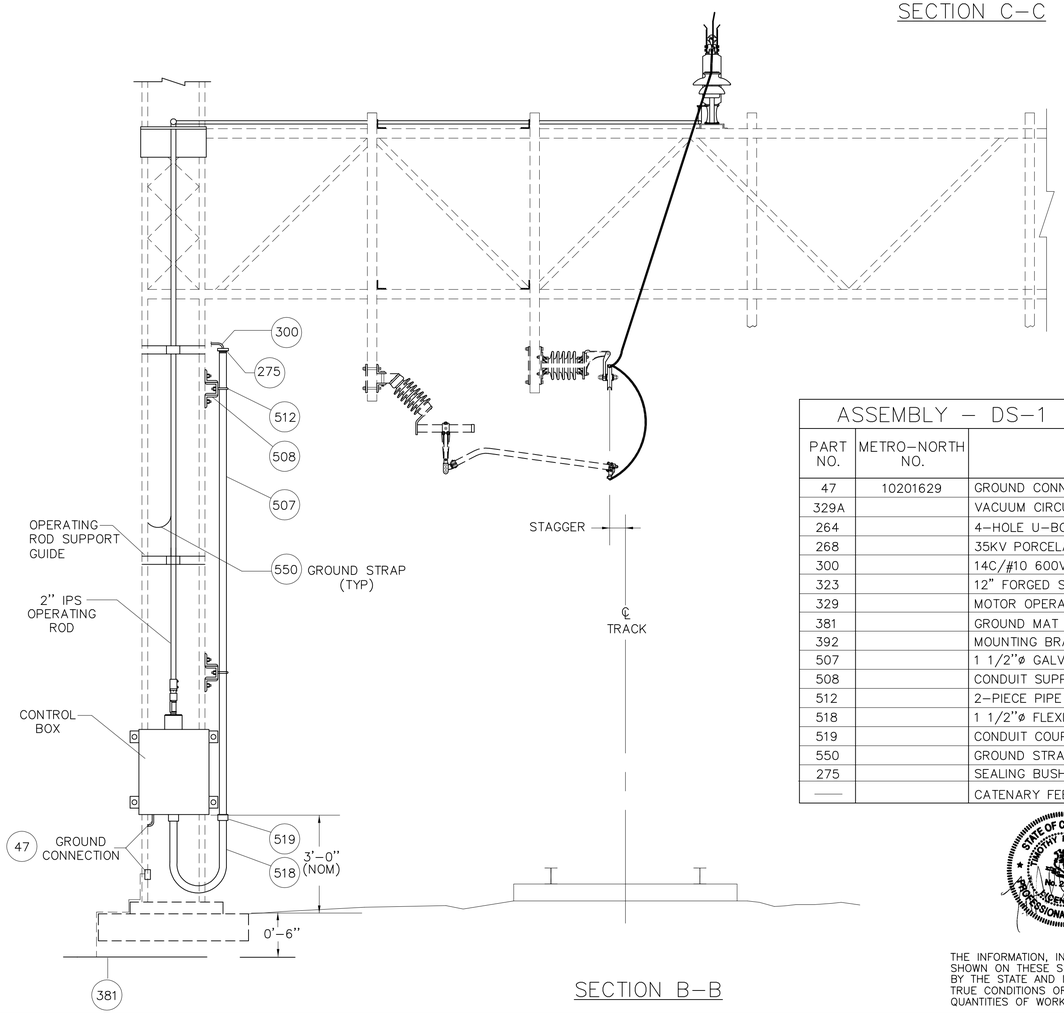

SECTION B-B

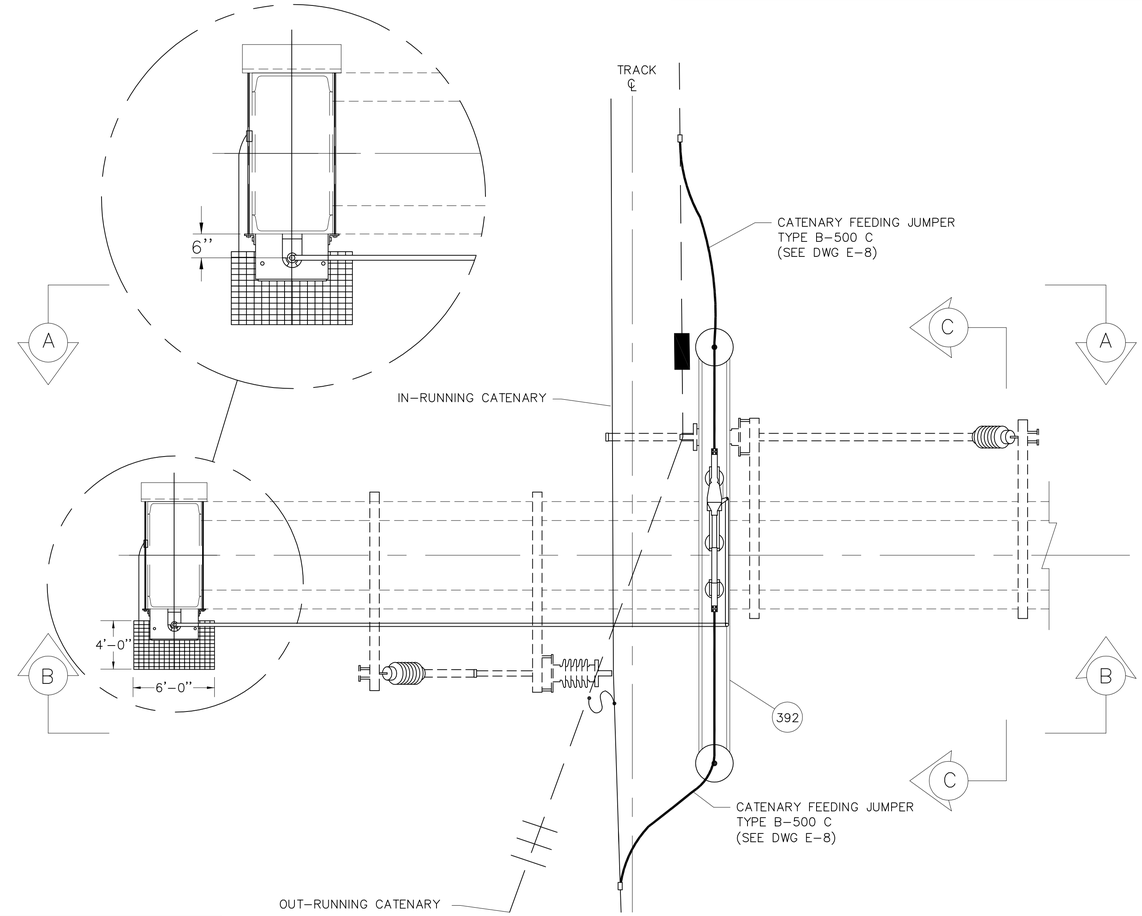

TOP VIEW

ASSEMBLY - DS-1

PART NO.	METRO-NORTH NO.	DESCRIPTION	QTY DS-1	QTY DSVI-1
47	10201629	GROUND CONNECTOR, CABLE TO FLAT SURFACE (TINNED)	3	3
329A		VACUUM CIRCUIT INTERRUPTER	–	1
264		4-HOLE U-BOLT TERMINAL LUG (500 KCMIL CONDUCTOR)	2	2
268		35KV PORCELAIN PIN INSULATOR	AS REQD	AS REQD
300		14C/#10 600V EPR CABLE	FT	FT
323		12" FORGED STEEL PIN FOR 35KV PIN INSULATOR	AS REQD	AS REQD
329		MOTOR OPERATED DISCONNECT SWITCH	1	1
381		GROUND MAT	1	1
392		MOUNTING BRACKET	1	1
507		1 1/2"ø GALVANIZED RIGID STEEL CONDUIT	FT	FT
508		CONDUIT SUPPORT ASSEMBLY FOR 1i"ø STEEL CONDUIT	AS REQD	AS REQD
512		2-PIECE PIPE STRAP FOR 1 1/2"ø CONDUIT	AS REQD	AS REQD
518		1 1/2"ø FLEXIBLE METAL CONDUITS	1	1
519		CONDUIT COUPLER FOR 1 1/2"ø CONDUITS	1	1
550		GROUND STRAP	2	2
275		SEALING BUSHING (OZ/GEDNEY OR APPROVED EQUAL)	1	1
——		CATENARY FEEDING JUMPER TYPE B-500 C	2	2

NOTES:

1. THE QUANTITIES SHOWN ARE FOR EACH DISCONNECT SWITCH ASSEMBLY.
2. MOTOR OPERATED DISCONNECT SWITCH SHALL BE SUPPLIED COMPLETE WITH MOTOR MECHANISM, OPERATING RODS, GROUND STRAPS INCLUDING ASSOCIATED HARDWARE, SUPPORT BRACKETS REQUIRED FOR THE FUNCTIONAL EQUIPMENT, AND MOUNTING BRACKET ATTACHMENT TO TRUSS CHORDS.
3. THE CONTRACTOR SHALL DEVELOP THE OPERATING ROD MECHANISM DESIGN ON SITE SPECIFIC BASIS. CONTRACTOR SHALL OBTAIN ENGINEER'S APPROVAL FOR OPERATING ROD BEFORE INSTALLING.

STATE OF CONNECTICUT TIMOTHY R. HOLLAND No. 23747 LICENSED PROFESSIONAL ENGINEER

URS CORPORATION AES
500 ENTERPRISE DRIVE
ROCKY HILL, CT 06067

THE INFORMATION, INCLUDING ESTIMATED QUANTITIES OF WORK SHOWN ON THESE SHEETS IS BASED ON LIMITED INVESTIGATIONS BY THE STATE AND IS IN NO WAY WARRANTED TO INDICATE THE TRUE CONDITIONS OR ACTUAL QUANTITIES OR DISTRIBUTION OF QUANTITIES OF WORK WHICH WILL BE REQUIRED.

AECOM
AECOM
500 ENTERPRISE DRIVE
ROCKY HILL, CT 06067
1-(860)-529-8882

NO.	DATE	DESCRIPTION

REVISIONS

NEW SHEET ADDED BY ADDENDUM NO. 4

STATE OF CONNECTICUT
DEPARTMENT OF TRANSPORTATION

STAMFORD CATENARY IMPROVEMENTS AND TRACK 7 EXTENSION

DISCONNECT SWITCH AND FEEDING ARRANGEMENT (TYP.)

ENGINEER: AECOM
DESIGNER: MS | DRAFTER: HJ | CHECKER: JCD
APPROVED: T. HOLLAND | DATE: 05/12/17
STRUCTURE NO. | BRIDGE LOG NO. | STRUCTURE SHEET NO. E-103

PROJECT CONTROL DATE: 05/12/2017 DISK FILENAME: E-103_A04.dwg 100% DESIGN

F H W A REGION	STATE	TOWN	FED. AID PROJ. NO.	PROJ. NO.	YEAR	SHEET NUMBER
1	CONN.	STAMFORD		301-163	2016	02.03.058.A4

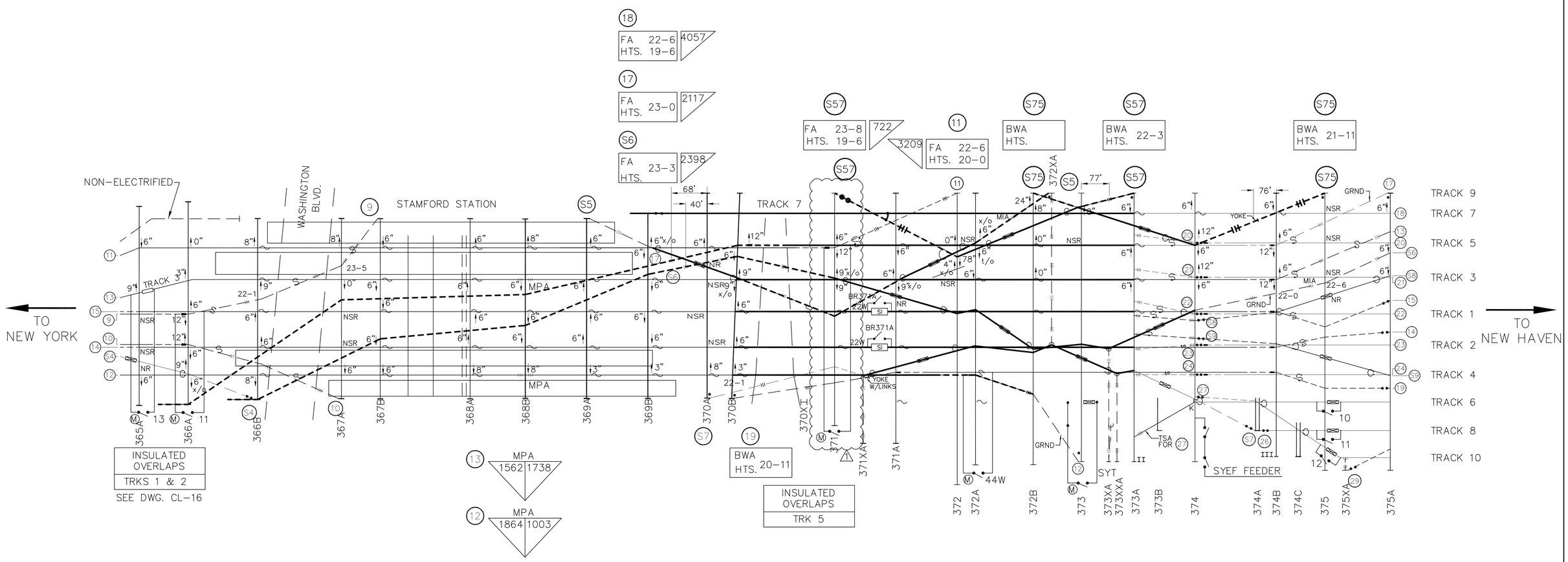

ABBREVIATION:

K	KNUCKLE
NSR	NOT SUPPORTED OR REGISTERED
NS	NOT SUPPORTED
NR	NOT REGISTERED

NOTES:

1. FOR GENERAL NOTES, SEE DRAWING G-8.
2. ALL HEIGHTS ARE ROUNDED TO THE NEAREST 1/2".
3. IN ORDER TO REDUCE THE RADIAL LOAD ON THE INSULATOR, UTILIZE TWO SUPPORT ASSEMBLIES WHERE REQUIRED.
4. THE MID-SPAN INSULATION ASSEMBLY AND POTENTIAL JUMPER ARE REQUIRED, IF VERTICAL CLEARANCE BETWEEN THE OOR WIRE AND THE ADJACENT DIFFERENT ELECTRICAL SECTION WIRE IS LESS THAN 2 FT.

STATE OF CONNECTICUT TIMOTHY R. HOLLAND No. 22382 LICENSED PROFESSIONAL ENGINEER

URS CORPORATION AES
500 ENTERPRISE DRIVE
ROCKY HILL, CT 06067

THE INFORMATION, INCLUDING ESTIMATED QUANTITIES OF WORK SHOWN ON THESE SHEETS IS BASED ON LIMITED INVESTIGATIONS BY THE STATE AND IS IN NO WAY WARRANTED TO INDICATE THE TRUE CONDITIONS OR ACTUAL QUANTITIES OR DISTRIBUTION OF QUANTITIES OF WORK WHICH WILL BE REQUIRED.

SEE ERECTION DIAGRAMS FOR ALL AS BUILT WIRE HEIGHTS AND STAGGERS

AECOM
AECOM
500 ENTERPRISE DRIVE
ROCKY HILL, CT 06067
1-(860)-529-8882

NO.	DATE	DESCRIPTION
1	05/12/17	ADD. NO. 4 – MOD LOCATION CHANGE

REVISIONS

ADDENDUM NO. 4

STATE OF CONNECTICUT
DEPARTMENT OF TRANSPORTATION

STAMFORD CATENARY IMPROVEMENTS AND TRACK 7 EXTENSION

CATENARY LAYOUT STAMFORD
STR. 365A TO STR. 375A

ENGINEER: AECOM
DESIGNER: RW | DRAFTER: AMK | CHECKER: MR
APPROVED: T. HOLLAND | DATE: 12/07/16
STRUCTURE NO. | BRIDGE LOG NO. | STRUCTURE SHEET NO. L-1

100% DESIGN
DISK FILENAME:L-1.DWG
PROJECT CONTROL DATE: 12/07/2016