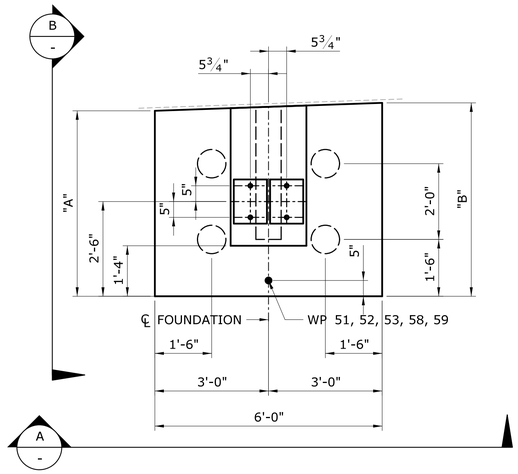

PLAN

SCALE: ½" = 1'-0"

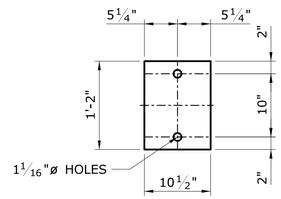

BEARING PLATE DETAIL

SCALE: 1" = 1'-0"

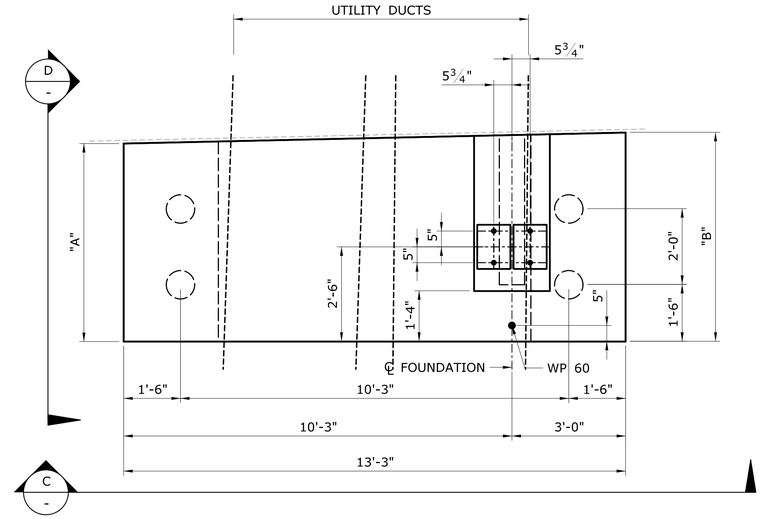

PLAN

SCALE: ½" = 1'-0"

NOTE:

1. FOR FOUNDATION NOTES SEE SHEET S-08.

WP	"A"	"B"
51	5.121'	5.072'
52	4.944'	4.862'
53	4.672'	4.581'
58	4.502'	4.632'
59	4.943'	5.074'
60	5.227'	5.516'

DESIGNED BY:
VB TECHNOLOGIES CORPORATION

STATE OF CONNECTICUT
NIKHIL S. VYAS
No. 12940
LICENSED
PROFESSIONAL ENGINEER

2017.05.19 09:47:07 -04'00'

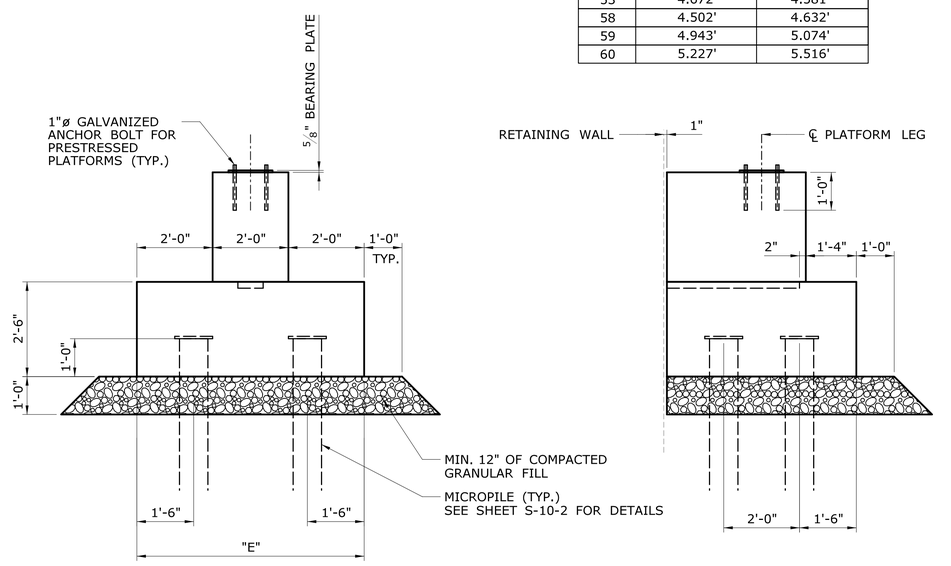

A - **VIEW**
SCALE: ½" = 1'-0"

B - **VIEW**
SCALE: ½" = 1'-0"

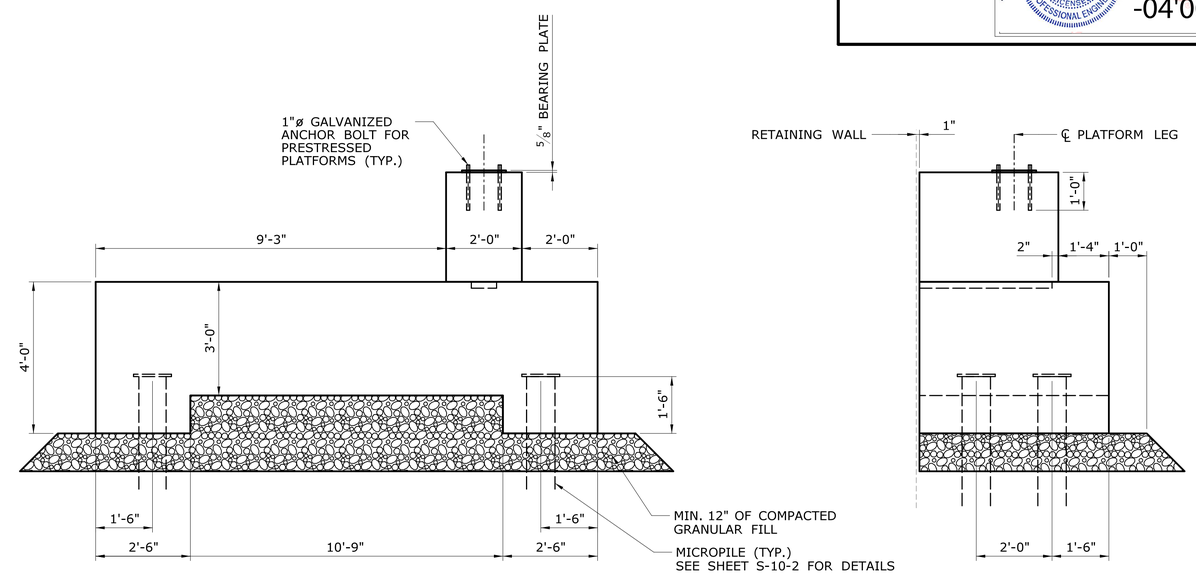

C - **VIEW**
SCALE: ½" = 1'-0"

D - **VIEW**
SCALE: ½" = 1'-0"

FOUNDATION TYPE 4

FOUNDATION TYPE 5

ADDENDUM NO. 4

REV.	DATE	REVISION DESCRIPTION	SHEET NO.
-	-	-	-
-	-	-	-
-	-	-	-
-	-	-	-
-	-	-	-
-	-	-	-
1	5/18/17	ADDENDUM NO. 4, CLARIFY FOUNDATION TYPES	-

THE INFORMATION, INCLUDING ESTIMATED QUANTITIES OF WORK, SHOWN ON THESE SHEETS IS BASED ON LIMITED INVESTIGATIONS BY THE STATE AND IS IN NO WAY WARRANTED TO INDICATE THE CONDITIONS OF ACTUAL QUANTITIES OF WORK WHICH WILL BE REQUIRED.

Plotted Date: 5/18/2017

DESIGNER/DRAFTER: **B.A./S.F.C.**
CHECKED BY: **N.S.V.**
SCALE AS NOTED

STATE OF CONNECTICUT
DEPARTMENT OF TRANSPORTATION

Filename: ...\SB_MSH_PLATFORM_301_163_S-09-1_A4_FOUND-4.dgn

SIGNATURE/BLOCK:
VB TECHNOLOGIES CORPORATION
STRUCTURAL & CIVIL ENGINEERS
2049 BILAS DEANE HIGHWAY, SUITE# 1E
ROCKY HILL, CT 06067

PROJECT TITLE:
STAMFORD CATENARY IMPROVEMENTS AND TRACK 7 EXTENSION

TOWN: **STAMFORD**

DRAWING TITLE: **PLATFORM FOUNDATION TYPE 4**

PROJECT NO. **301-163**
DRAWING NO. **S-09-1**
SHEET NO. **02.08.009-1.A4**

NOTE:

1. FOR FOUNDATION NOTES AND DETAILS SEE SHEETS S-08 AND S-09.

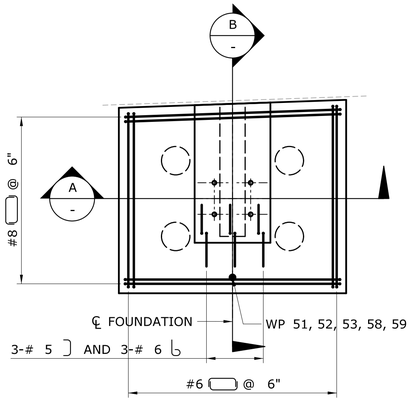

PLAN

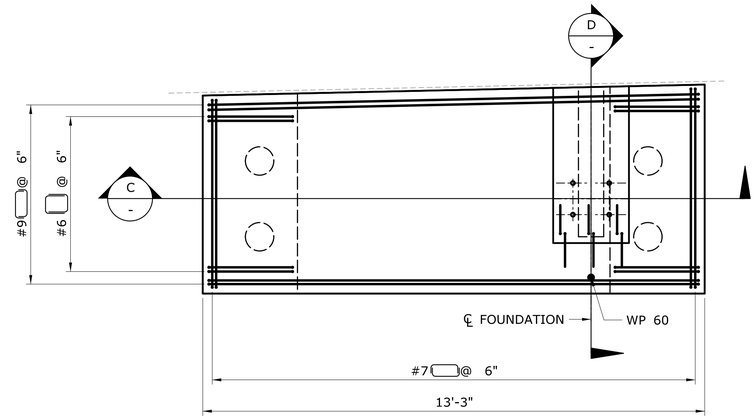

PLAN

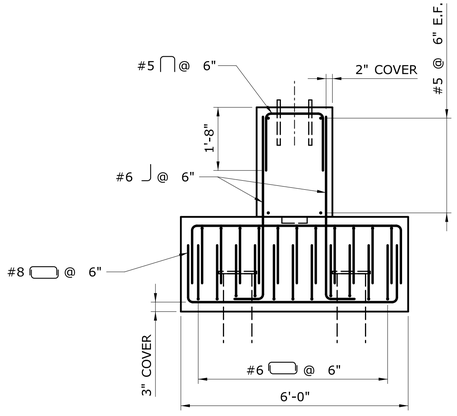

REINFORCEMENT TO CLEAR MICROPILES

A - SECTION

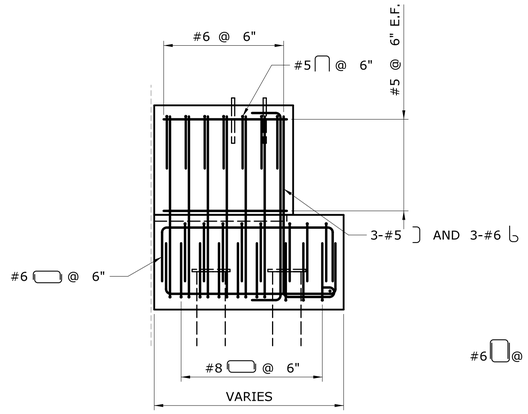

B - SECTION

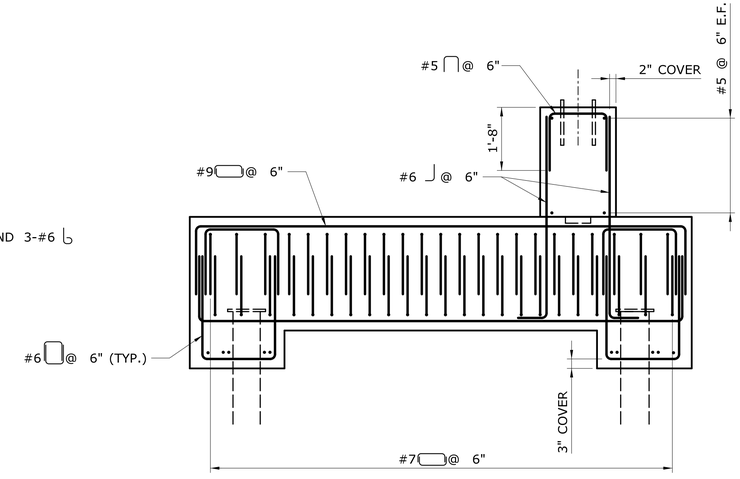

REINFORCEMENT TO CLEAR MICROPILES

C - SECTION

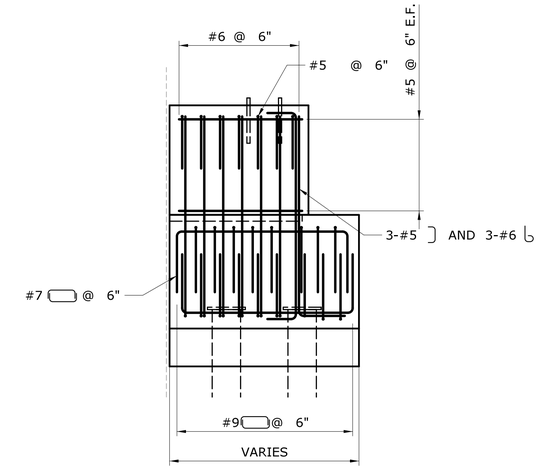

D - SECTION

FOUNDATION TYPE 4

FOUNDATION TYPE 5

ADDENDUM NO. 4

REV.	DATE	REVISION DESCRIPTION	SHEET NO.
-	-	-	-
-	-	-	-
-	-	-	-
-	-	-	-
-	-	-	-
1	5/18/17	ADDENDUM NO. 4, CLARIFY FOUNDATION TYPES	-

THE INFORMATION, INCLUDING ESTIMATED QUANTITIES OF WORK, SHOWN ON THESE SHEETS IS BASED ON LIMITED INVESTIGATIONS BY THE STATE AND IS IN NO WAY WARRANTED TO INDICATE THE CONDITIONS OF ACTUAL QUANTITIES OF WORK WHICH WILL BE REQUIRED.

Plotted Date: 5/18/2017

DESIGNER/DRAFTER: B.A./S.F.C.
CHECKED BY: N.S.V.
SCALE: 1/2" = 1'-0"

STATE OF CONNECTICUT
DEPARTMENT OF TRANSPORTATION

Filename: ...\SB_MSH_PLATFORM_301_163_S-10-1_A4_FOUND-4.dgn

SIGNATURE/BLOCK:

VB TECHNOLOGIES CORPORATION
STRUCTURAL & CIVIL ENGINEERS
2049 BILAS DEANE HIGHWAY, SUITE# 1E
ROCKY HILL, CT 06067

PROJECT TITLE:
STAMFORD
CATENARY IMPROVEMENTS
AND TRACK 7 EXTENSION

TOWN: STAMFORD

DRAWING TITLE: PLATFORM FOUNDATION TYPE 4

PROJECT NO. 301-163
DRAWING NO. S-10-1
SHEET NO. 02.08.010-1.A4

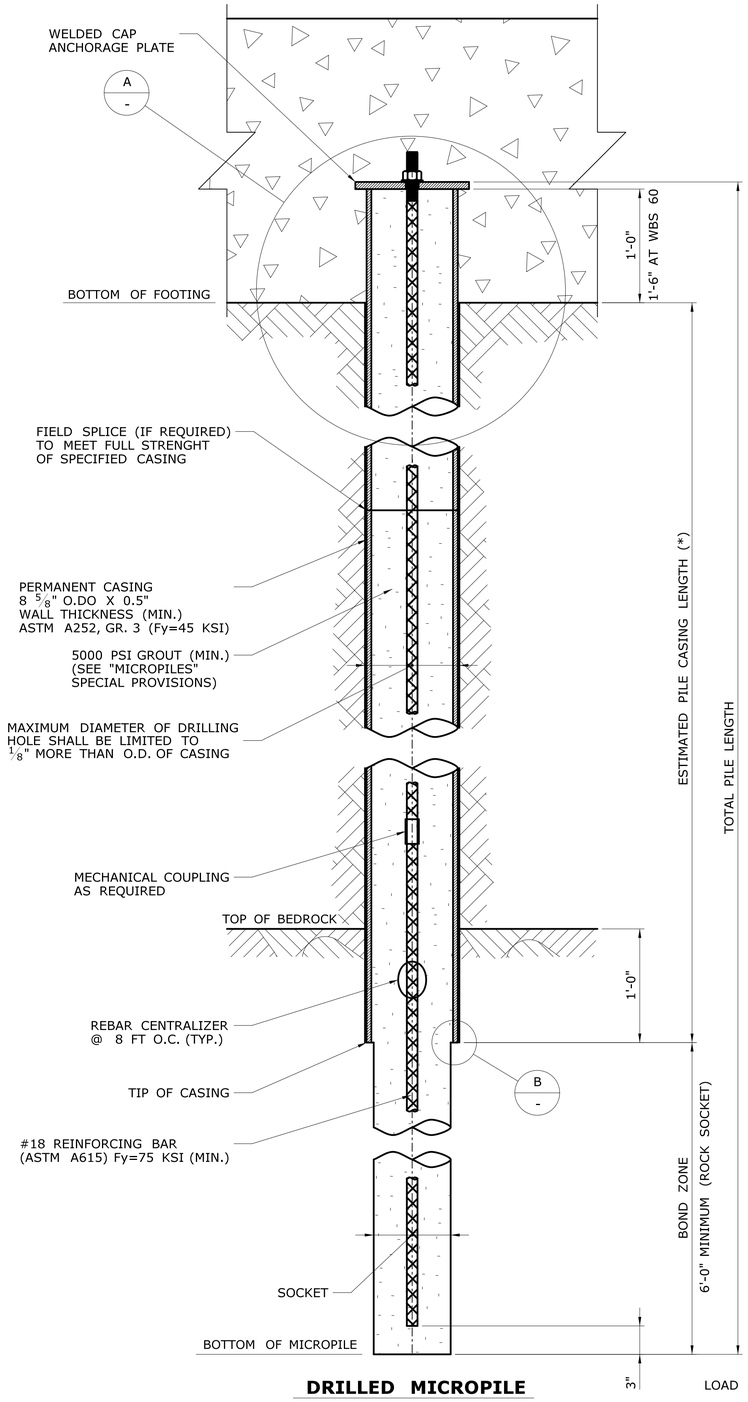

DRILLED MICROPILE

SCALE: 1 1/2" = 1'-0"

LOAD DESIGN CAPACITY = 30 TONS COMPRESSION (GROUP I)

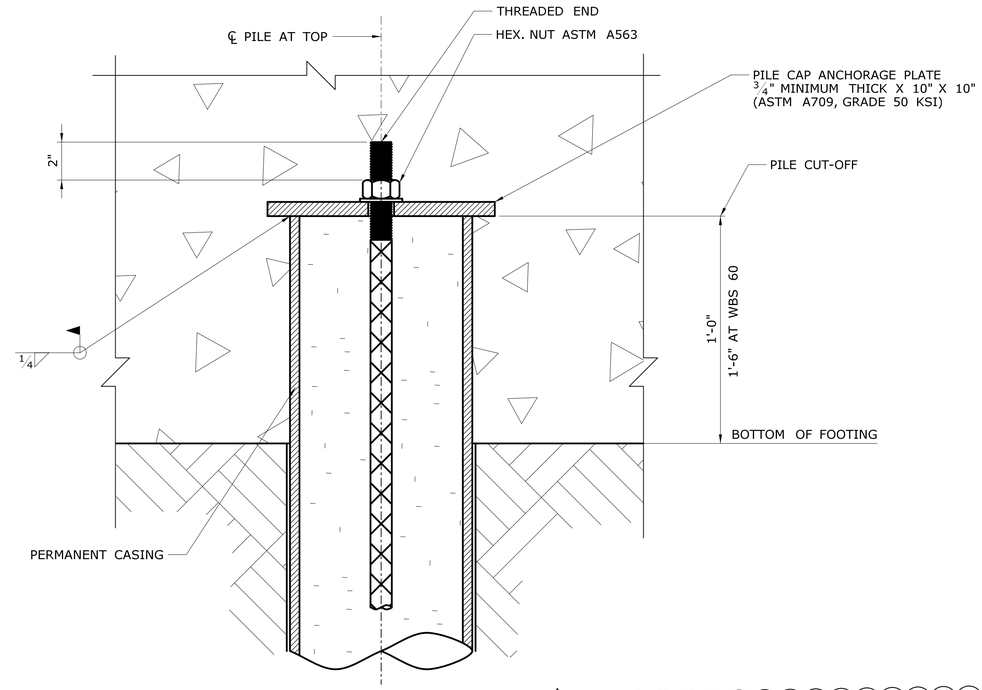

DETAIL A

SCALE: 3" = 1'-0"

MICROPILE LOCATION	STAIR LOCATION B	STAIR LOCATION C
BOTTOM OF PILE FOOTING EL.	27.5	27.33
PILE CUT-OFF EL.	28.5	28.33
ESTIMATED CASING LENGTH (FT)	13.5	22.33
TOTAL NUMBER OF PRODUCTION PILES	12	12

(*) ESTIMATED AVERAGE CASING LENGTHS SHOWN

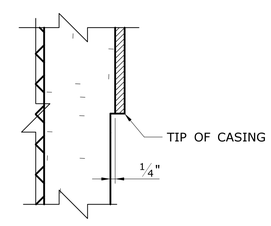

DETAIL B

SCALE: 3" = 1'-0"

NOTES:

1. THE CONTRACTOR SHALL DESIGN AND INSTALL MICROPILE THAT WILL DEVELOP THE LOAD CAPACITIES INDICATED ON THE PLANS. SEE SPECIAL PROVISIONS "MICROPILES" FOR ADDITIONAL REQUIREMENTS.
2. MICROPILES WILL BE DRILLED THROUGH ALL MATERIALS ENCOUNTERED.
3. THE CONTRACTOR IS ADVISED TO THE POSSIBLE PRESENCE OF BOULDERS, RUBBLE, EXISTING FOUNDATIONS AND OTHER MISCELLANEOUS MATERIALS WITHIN THE EXISTING RAILROAD EMBANKMENT AND BELOW GROUND LEVEL. REFER TO EXISTING SOIL BORING LOGS.
4. THE CONTRACTOR SHALL PROPERLY DISPOSE OF ALL MATERIALS (CUTTINGS, ETC.) RECOVERED FROM THE DRILLING OPERATIONS.
5. THE COST OF CAP ANCHORAGE PLATE AND NUT SHALL BE INCLUDED IN THE ITEM "MICROPILES".
6. THE CONTRACTOR SHALL NOT INSTALL ANY PRODUCTION MICROPILES UNTIL MICROPILE VERIFICATION TESTS ARE PERFORMED AND APPROVED BY THE ENGINEER.
7. A MINIMUM OF TEN PERCENT OF ALL PRODUCTION PILES SHALL BE PROOF TESTED.
8. TEST PILE LOCATION SHALL BE DETERMINED IN FIELD BASED ON CONTRACTOR'S INSTALLATION SEQUENCE.
9. PILE INSTILLATION TOLERANCES (SEE SPECIFICATION FOR MICROPILES) APPLY TO THE LEVEL OF FINAL PILE CUTOFF.
10. A VERIFICATION TEST SHALL BE PERFORMED ON TWO SACRIFICIAL MICROPILES. TEST PILES SHALL BE CUTOFF AT LEAST THREE FEET BELOW FINAL GRADE OR ANY NEW STRUCTURE AFTER TESTING.

ADDENDUM NO. 4

REV.	DATE	REVISION DESCRIPTION	SHEET NO.
-	-	-	-
-	-	-	-
-	-	-	-
-	-	-	-
-	-	-	-
1	5/18/17	ADDENDUM NO. 4, REVISE TABLE AND ADD NOTE	-

THE INFORMATION, INCLUDING ESTIMATED QUANTITIES OF WORK, SHOWN ON THESE SHEETS IS BASED ON LIMITED INVESTIGATIONS BY THE STATE AND IS IN NO WAY WARRANTED TO INDICATE THE CONDITIONS OF ACTUAL QUANTITIES OF WORK WHICH WILL BE REQUIRED.

Plotted Date: 5/18/17

DESIGNER/DRAFTER: B.A./S.F.C.
CHECKED BY: N.S.V.
SCALE AS NOTED

STATE OF CONNECTICUT
DEPARTMENT OF TRANSPORTATION

Filename: ...\SB_MSH_PLATFORM_301_163_S-10-2_A4_MICROPILE.dgn

SIGNATURE/BLOCK:
VB TECHNOLOGIES CORPORATION
STRUCTURAL & CIVIL ENGINEERS
2049 SILAS DEANE HIGHWAY, SUITE# 1E
ROCKY HILL, CT 06067

PROJECT TITLE:
STAMFORD
CATENARY IMPROVEMENTS
AND TRACK 7 EXTENSION

TOWN: STAMFORD

DRAWING TITLE: PLATFORM FOUNDATION MICROPILE DETAILS

PROJECT NO. 301-163
DRAWING NO. S-10-2
SHEET NO. 02.08.010-2.A4