06 - SIDE-MOUNTED VMS STRUCTURE

INDEX OF DRAWINGS

DRAWING NUMBER	DRAWING TITLE	DRAWING NUMBER	DRAWING TITLE
VMS-01	INDEX OF DRAWINGS		
VMS-02	SIDE MOUNTED VMS SUPPORT (TYPE 2) DETAILS - 1		
VMS-03	SIDE MOUNTED VMS SUPPORT (TYPE 2) DETAILS - 2		

DESIGNED BY:

Stantec

STANTEC CONSULTING SERVICES INC.
55 CHURCH STREET, SUITE 601
NEW HAVEN, CT 06510

STATE OF CONNECTICUT
ANDREW M. LESSARD
10208
LICENSED
PROFESSIONAL ENGINEER

Andrew Lessard
2017.07.25
18:45:15-04'00'

REV.	DATE	REVISION DESCRIPTION	SHEET NO.
-	-	-	-
-	-	-	-
-	-	-	-
-	-	-	-
-	-	-	-
-	-	-	-

THE INFORMATION, INCLUDING ESTIMATED QUANTITIES OF WORK, SHOWN ON THESE SHEETS IS BASED ON LIMITED INVESTIGATIONS BY THE STATE AND IS IN NO WAY WARRANTED TO INDICATE THE CONDITIONS OF ACTUAL QUANTITIES OF WORK WHICH WILL BE REQUIRED.

Plotted Date: 7/25/2017

DESIGNER/DRAFTER: **JJF**

CHECKED BY: **AML**

STATE OF CONNECTICUT
DEPARTMENT OF TRANSPORTATION

Filename: ...\SB_Side_Mounted_VMS_DrawingIndex.dgn

SIGNATURE/ BLOCK:

STATE OF CONNECTICUT
ANDREW M. LESSARD
10208
LICENSED
PROFESSIONAL ENGINEER

Stantec Consulting
Services Inc.
55 Church Street
Suite 601
New Haven, CT 06510

PROJECT TITLE:

REPLACEMENT OF HIGHWAY SIGNING ON ROUTE 15

TOWN: **VARIOUS LOCATIONS**

DRAWING TITLE: **INDEX OF DRAWINGS**

PROJECT NO. **173-472**

DRAWING NO. **VMS-01**

SHEET NO. **06.01**

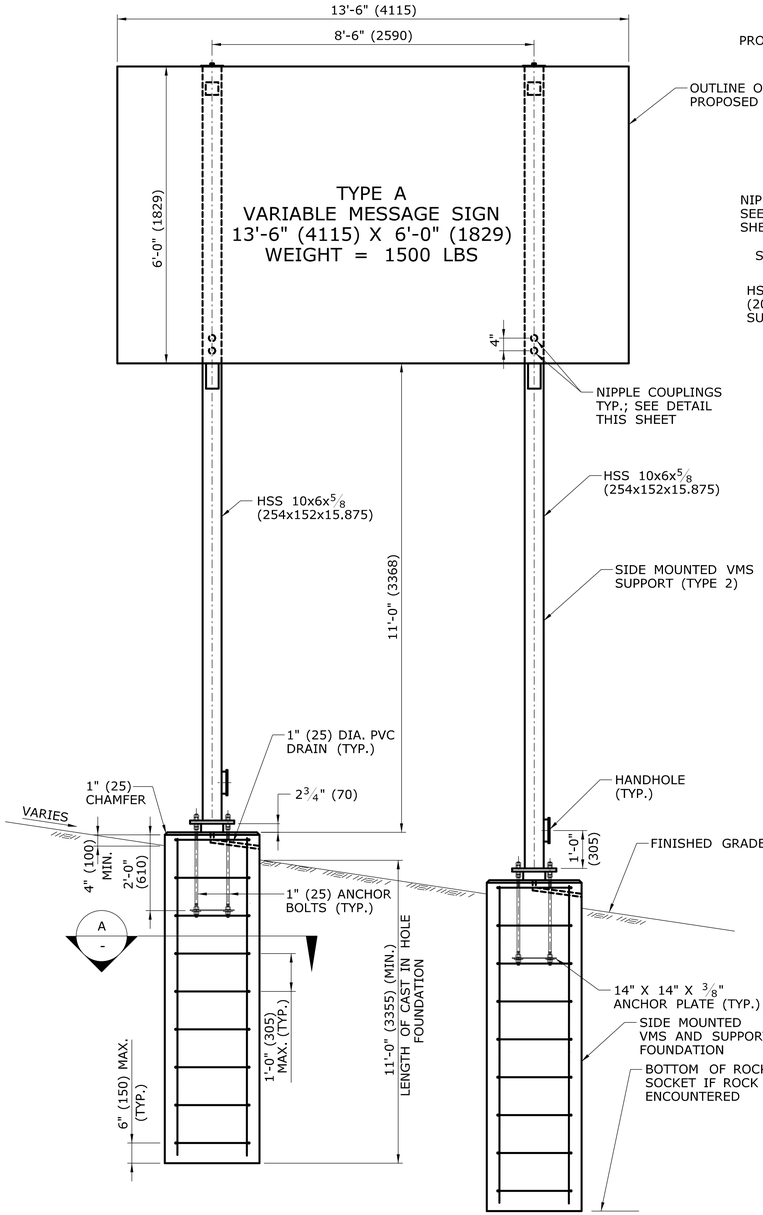

ELEVATION
NOT TO SCALE

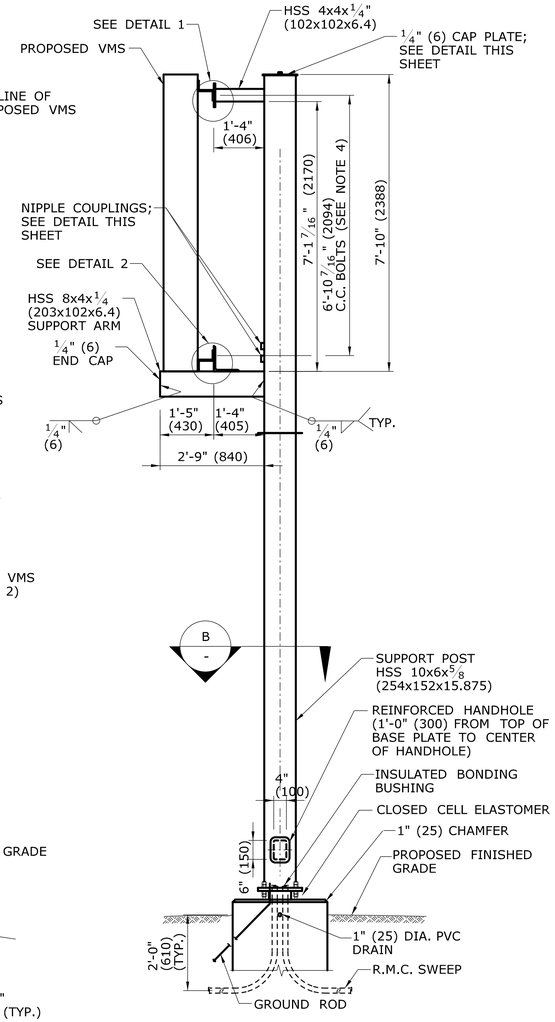

SIDE VIEW
NOT TO SCALE

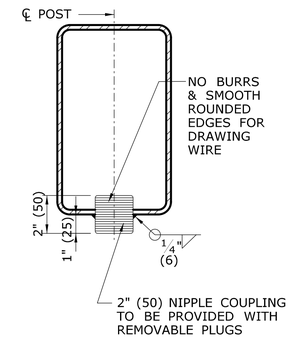

NIPPLE COUPLING DETAIL
NOT TO SCALE

NOTES:

1. ALL STRUCTURAL TUBING SHALL BE ASTM A500 GRADE B WITH MINIMUM YIELD STRESS Fy=318 MPa. ALL STRUCTURAL SHAPES AND PLATES SHALL BE AASHTO M270, GRADE 50F2 STEEL WITH A MINIMUM YIELD STRESS Fy=345 MPa.
2. ANCHOR BOLTS SHALL BE ASTM A449 STEEL AND SHALL BE MECHANICALLY GALVANIZED.
3. THE TOP OF FOUNDATION ELEVATION SHALL BE SET SO THAT THE TOP OF THE VARIABLE MESSAGE SIGN IS NOT HIGHER THAN 18'-10 1/2" (5760) ABOVE THE PROPOSED GROUND ELEVATION AT THE FOUNDATION.
4. IT IS THE CONTRACTOR'S RESPONSIBILITY TO COORDINATE THIS DIMENSION BETWEEN THE FABRICATOR OF THE VMS AND THE FABRICATOR OF THE SUPPORT. THE 6'-10 7/16" (2094) DIMENSION SHALL BE COORDINATED BEFORE FABRICATION OF THE STEEL.
5. MATERIAL, CONSTRUCTION METHODS AND BASIS OF PAYMENT FOR THE VMS SIGN SUPPORT AND FOUNDATIONS SHALL BE IN ACCORDANCE WITH THE SPECIAL PROVISION "SIDE MOUNTED VMS SUPPORT (TYPE 2)".

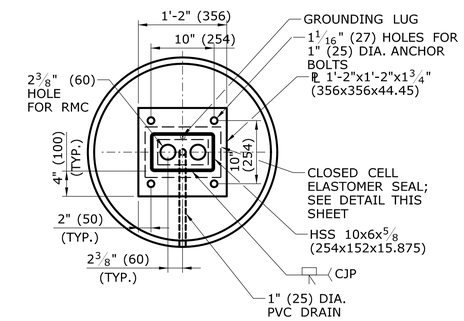

SECTION B
NOT TO SCALE

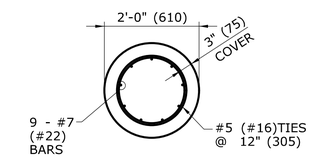

SECTION A
NOT TO SCALE

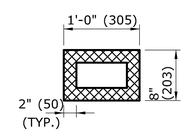

CLOSED CELL ELASTOMER SEAL DETAIL
NOT TO SCALE

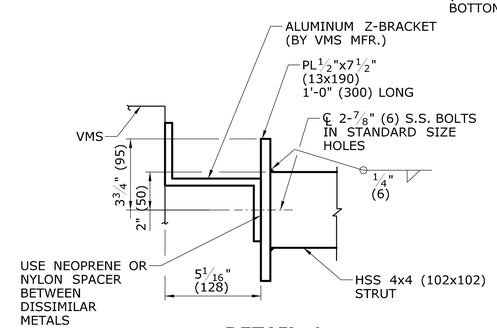

DETAIL 1
NOT TO SCALE

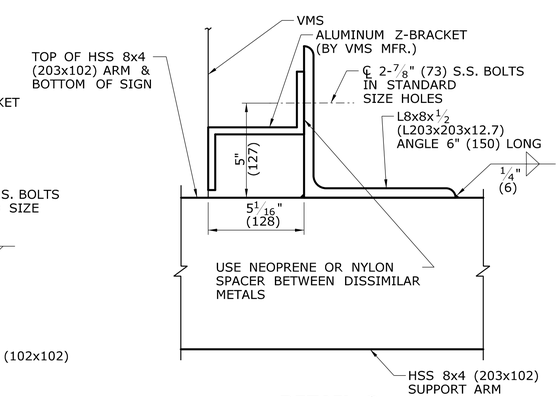

DETAIL 2
NOT TO SCALE

ALL METRIC DIMENSIONS ARE IN MILLIMETERS (mm) UNLESS NOTED OTHERWISE.

REV.	DATE	REVISION DESCRIPTION	SHEET NO.
-	-	-	-
-	-	-	-
-	-	-	-
-	-	-	-
-	-	-	-
-	-	-	-

THE INFORMATION, INCLUDING ESTIMATED QUANTITIES OF WORK, SHOWN ON THESE SHEETS IS BASED ON LIMITED INVESTIGATIONS BY THE STATE AND IS IN NO WAY WARRANTED TO INDICATE THE CONDITIONS OF ACTUAL QUANTITIES OF WORK WHICH WILL BE REQUIRED.

Plotted Date: 7/25/2017

DESIGNER/DRAFTER: JJF
CHECKED BY: AML
SCALE AS NOTED

STATE OF CONNECTICUT
DEPARTMENT OF TRANSPORTATION

Filename: ...\SB_MSH_VMS_DETAILS 1_VMS-02.dgn

SIGNATURE/BLOCK:
Stantec Consulting Services Inc.
55 Church Street
Suite 601
New Haven, CT 06510

PROJECT TITLE:
REPLACEMENT OF HIGHWAY SIGNING ON ROUTE 15

TOWN: **VARIOUS LOCATIONS**

DRAWING TITLE: **SIDE MOUNTED VMS SUPPORT (TYPE 2) DETAILS-1**

PROJECT NO. **173-472**
DRAWING NO. **VMS-02**
SHEET NO. **06.02**

HANDHOLE NOTES:
1. THERE SHALL BE NO SHARP EDGES, PROTRUSIONS OR BURRS AROUND THE HANDHOLE.
2. THE CAP PLATE SHALL BE TRIAL-BOLTED ON IN THE SHOP BEFORE PAINTING TO ENSURE THAT THE NUTS ARE WELDED ON WITH THE PROPER ALIGNMENT.
3. NEOPRENE GASKET SHALL CONFORM TO ASTM D1056, GRADE 2A2 OR 2A3.

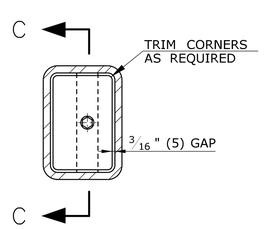

END VIEW

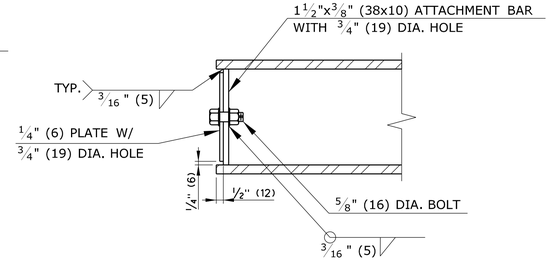

SECTION C-C

CHORD CAP DETAILS

NOT TO SCALE

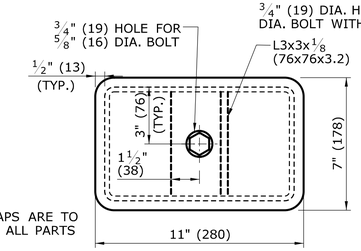

TOP VIEW

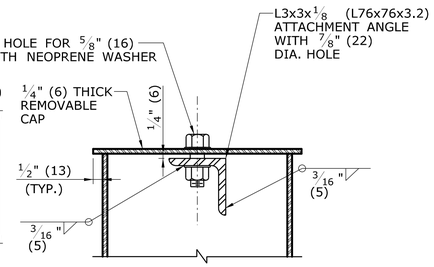

SECTION

CAP NOTE
CHORD AND POST CAPS ARE TO BE INSTALLED AFTER ALL PARTS HAVE BEEN PAINTED.

POST CAP PLATE DETAILS

NOT TO SCALE

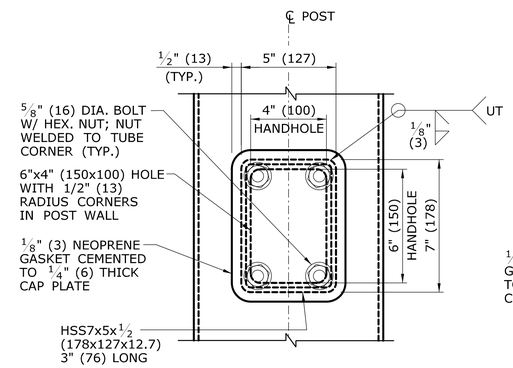

ELEVATION

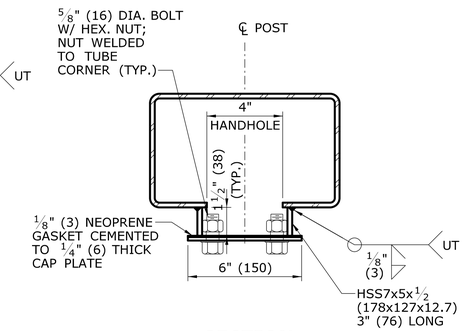

SECTION

HANDHOLE DETAIL

NOT TO SCALE

ALL METRIC DIMENSIONS ARE IN MILLIMETERS (mm) UNLESS NOTED OTHERWISE.

REV.	DATE	REVISION DESCRIPTION	SHEET NO.
-	-	-	-
-	-	-	-
-	-	-	-
-	-	-	-
-	-	-	-
-	-	-	-

THE INFORMATION, INCLUDING ESTIMATED QUANTITIES OF WORK, SHOWN ON THESE SHEETS IS BASED ON LIMITED INVESTIGATIONS BY THE STATE AND IS IN NO WAY WARRANTED TO INDICATE THE CONDITIONS OF ACTUAL QUANTITIES OF WORK WHICH WILL BE REQUIRED.

Plotted Date: 7/25/2017

DESIGNER/DRAFTER: JJF
CHECKED BY: AML
SCALE AS NOTED

STATE OF CONNECTICUT
DEPARTMENT OF TRANSPORTATION

Filename: ...\SB_MSH_VMS_DETAILS 2_VMS-03.dgn

SIGNATURE/BLOCK:
Stantec Consulting Services Inc.
55 Church Street
Suite 601
New Haven, CT 06510

PROJECT TITLE:
REPLACEMENT OF HIGHWAY SIGNING ON ROUTE 15

TOWN: **VARIOUS LOCATIONS**

DRAWING TITLE: **SIDE MOUNTED VMS SUPPORT (TYPE 2) DETAILS-2**

PROJECT NO. **173-472**
DRAWING NO. **VMS-03**
SHEET NO. **06.03**