ESTIMATED QUANTITIES

ITEM	UNIT	TOTAL
GUANO ABATEMENT	C.F.	150
LEAD COMPLIANCE FOR ABRASIVE BLAST CLEANING AND MISCELLANEOUS TASKS	L.S.	L.S.
REMOVE DIRT AND DEBRIS	EA.	12
CUT BITUMINOUS CONCRETE PAVEMENT	L.F.	1460
TEMPORARY PAVEMENT	S.Y.	490
PMA S0.5	TON	715
HMA S0.25	TON	26
JOINT AND CRACK SEALING OF BITUMINOUS CONCRETE PAVEMENT	L.F.	1320
MATERIAL FOR TACK COAT	GAL.	605
FINE MILLING OF BITUMINOUS CONCRETE (0" TO 4")	S.Y.	6320
REMOVAL OF EXISTING WEARING SURFACE	S.Y.	490
JACKING EXISTING SUPERSTRUCTURE (SITE NO. 2)	L.S.	L.S.
CLEAN EXISTING SCUPPERS	EA.	7
EXTEND EXISTING WEEPHOLES	EA.	15
ASPHALTIC PLUG EXPANSION JOINT SYSTEM	C.F.	305
PREFORMED JOINT SEAL	L.F.	765
BEARING REPLACEMENT WITH ELASTOMERIC BEARING PADS	EA.	22
CONSTRUCT CONCRETE KEEPER BLOCKS	EA.	3
CLASS "S" CONCRETE	C.Y.	15
REMOVE STAY-IN-PLACE FORM	S.F.	400
CLASS "F" CONCRETE	C.Y.	10
FULL DEPTH PATCH (HIGH EARLY STRENGTH CONCRETE)	C.Y.	11
PARTIAL DEPTH PATCH	C.F.	594
REPAIR OF BEARING PAD	EA.	4
EPOXY INJECTION CRACK REPAIR	L.F.	30
DEFORMED STEEL BARS	LB.	930
DEFORMED STEEL BARS - EPOXY COATED	LB.	1100
DRILLING AND GROUTING REINFORCING BARS	L.F.	105
CLEAN AND COAT EXPOSED REINFORCING STEEL	L.F.	160
REPAIR DEFECTIVE WELDS	L.F.	20
STRUCTURAL STEEL REPAIRS (SITE NO. 2)	CWT	58
DISPOSAL OF LEAD DEBRIS FROM ABRASIVE BLAST CLEANING	TON	5
DISPOSAL OF CRW LEAD DEBRIS FROM ABRASIVE BLAST CLEANING	TON	3
ABRASIVE BLAST CLEANING AND FIELD PAINTING OF BEAM ENDS (SITE NO. 2)	L.S.	L.S.
CLASS 1 CONTAINMENT AND COLLECTION OF SURFACE PREPARATION DEBRIS (SITE NO. 2)	L.S.	L.S.
LOCALIZED PAINT REMOVAL & FIELD PAINTING OF EXISTING STEEL	S.F.	1170
PEENING COVER PLATE WELDS	EA.	48
MEMBRANE WATERPROOFING (SHEET) (TORCH APPLIED)	S.Y.	365
REMOVAL OF EXISTING MASONRY	C.Y.	5
CONCRETE HAUNCH REMOVAL	L.F.	1315
REMOVE CONDUIT	L.F.	35

CONCRETE DISTRIBUTION

SUPERSTRUCTURE	C.Y.	0
SUBSTRUCTURE (CLASS "F" & "S")	C.Y.	25
FOOTINGS	C.Y.	0
TOTAL	C.Y.	25

DESIGNED BY:
ALFRED BENESCH & CO.

STATE OF CONNECTICUT · STEVEN J. DRECHSLER · No. 23441 · LICENSED PROFESSIONAL ENGINEER

Steven Drechsler
2017.10.31
11:17:38-04'00'

GENERAL NOTES:

SPECIFICATIONS: CONNECTICUT DEPARTMENT OF TRANSPORTATION FORM 817 (2016), SUPPLEMENTAL SPECIFICATIONS DATED JANUARY 2017 AND SPECIAL PROVISIONS.

DESIGN SPECIFICATIONS: ALL NEW ELEMENTS TO BE DESIGNED ACCORDING TO AASHTO LRFD BRIDGE DESIGN SPECIFICATIONS, 2014 7TH EDITION AND AS SUPPLEMENTED BY THE CONNECTICUT DEPARTMENT OF TRANSPORTATION BRIDGE DESIGN MANUAL (2003).

ALLOWABLE DESIGN STRESSES:
CLASS 'F' CONCRETE BASED ON F'c = 4000 PSI
CLASS 'S' CONCRETE BASED ON F'c = 3000 PSI
REINFORCEMENT (ASTM A615 GRADE 60) Fy = 60,000 PSI
STRUCTURAL STEEL (AASHTO M270, GRADE 50) Fy = 50,000 PSI

THE SPECIFIED CONCRETE STRENGTH USED IN DESIGN, f'c, OF THE CONCRETE COMPONENTS IS NOTED ABOVE. THE MINIMUM COMPRESSIVE STRENGTH OF THE CONCRETE IN THE CONSTRUCTED COMPONENTS SHALL CONFORM TO THE REQUIREMENTS OF "SECTION 6.01 CONCRETE FOR STRUCTURES."

LIVE LOAD: HL-93 (NEW ELEMENTS ONLY)

FUTURE PAVING ALLOWANCE: NONE

STRUCTURAL STEEL: SEE DWG. NO. SD-09, SUBSET 07 FOR DESIGNATIONS AND REQUIREMENTS.

PAINT: THE END 1.5 x DEPTH OF THE EXISTING GIRDERS IN ALL SPANS (INCLUDING ALL EXPOSED STEEL SURFACES WITHIN THESE LIMITS - DIAPHRAGMS, FIXED BEARINGS, CONNECTION PLATES, ETC.) SHALL BE CLEANED AND PAINTED. THIS WORK SHALL BE PAID UNDER "ABRASIVE BLAST CLEANING AND FIELD PAINTING OF BEAM ENDS (SITE NO. 2)." SEE DWG. NO SD-09, SUBSET 07. THE CONTRACTOR SHALL ALSO PERFORM LOCALIZED FIELD PAINTING OF THE EXISTING GIRDERS AS SHOWN AND AS DIRECTED BY THE ENGINEER, WHICH WILL BE PAID FOR UNDER THE ITEM "LOCALIZED PAINT REMOVAL AND FIELD PAINTING OF EXISTING STEEL." THE COLOR OF THE TOP COAT SHALL CONFORM TO THE FEDERAL STANDARD 595 COLOR NO. 24277 (GREEN) OR AS APPROVED BY ENGINEER.

BITUMINOUS CONCRETE OVERLAY: THIS SHALL CONSIST OF ONE LIFT OF PMA S 0.5" TRAFFIC LEVEL 3 (2 INCHES THICK). PAVEMENT THICKNESS SHALL BE TAPERED AT ENDS TO MATCH PAVEMENT THICKNESS AT CONSTRUCTION LIMITS. SEE HIGHWAY PLANS, SUBSET 03.

DIMENSIONS: WHEN ELEVATIONS ARE GIVEN TO LESS THAN THREE DECIMAL PLACES,THE OMITTED DIGITS SHALL BE ASSUMED TO BE ZEROS.

SUBSTRUCTURE ELEVATIONS: LISTED SUBSTRUCTURE ELEVATIONS ARE BASED ON ORIGINAL DESIGN DRAWINGS DATED 1962 (ORIGINAL PLANS REFERENCE U.S.C. & G.S. VERTICAL DATUM).

EXISTING DIMENSIONS: DIMENSIONS OF THE EXISTING STRUCTURE SHOWN ON THESE PLANS ARE FOR GENERAL REFERENCE ONLY. THEY ARE BASED ON ROUGH FIELD MEASUREMENTS OR EXISTING DRAWINGS AND ARE NOT GUARANTEED. THE CONTRACTOR SHALL TAKE ALL FIELD MEASUREMENTS NECESSARY TO ASSURE PROPER FIT OF THE FINISHED WORK AND SHALL ASSUME FULL RESPONSIBILITY FOR THEIR ACCURACY. WHEN SHOP DRAWINGS BASED ON FIELD MEASUREMENTS ARE SUBMITTED FOR APPROVAL, THE FIELD MEASUREMENTS SHALL ALSO BE SUBMITTED FOR REFERENCE BY THE REVIEWER.

UTILITIES: EXISTING BRIDGE ILLUMINATION AND 4" RMC - SURFACE MOUNTED - FIBER OPTIC IMS TRUNKLINE CABLE SHALL BE MAINTAINED IN SERVICE DURING CONSTRUCTION.

EXISTING BRIDGE PLANS: PLANS FOR THE EXISTING BRIDGE (STATE PROJECT NOS. 63-184 AND 63-395) ARE AVAILABLE FOR CONTRACTOR REVIEW AT THE CTDOT RECORD CENTER LOCATED AT 160 PASCONE PLACE NEWINGTON, CT 06111.

ALL UNDERGROUND UTILITIES, CABLE, AND FACILITIES MUST BE LOCATED AND PROTECTED BEFORE ANY EXCAVATING, DRILLING, BORING/DIRECTIONAL DRILLING, GROUND PENETRATING ACTIVITIES, OR CONSTRUCTION TAKES PLACE. THIS INCLUDES RAILROAD AND COMMERCIAL UTILITIES, CABLES, DUCT LINES, AND FACILITIES. THESE ACTIVITIES WILL NOT BE PERFORMED IN CLOSE PROXIMITY TO THE AMTRAK DUCT LINES UNLESS MONITORED BY ON-SITE AMTRAK COMMUNICATIONS AND SIGNAL (C&S) DEPARTMENT PERSONNEL. HAND DIGGING MAY BE REQUIRED, AS DIRECTED BY AMTRAK THROUGH THE ON-SITE AMTRAK C&S PERSONNEL. AMTRAK MAINTAINS THE RIGHT TO ACCESS ALL EXISTING CABLES AND CONDUITS THROUGHOUT CONSTRUCTION. AMTRAK ALSO RESERVES THE RIGHT TO UPGRADE AND INSTALL NEW CABLES AND CONDUITS IN THE AFFECTED AREA. THE "ONE-CALL" PROCESS MUST BE FOLLOWED. BE AWARE THAT AMTRAK IS NOT A PART OF THE "ONE-CALL" PROCESS; CONTACT AMTRAK ENGINEERING TO HAVE ALL AMTRAK UNDERGROUND UTILITIES AND ASSETS LOCATED. PRECAUTIONS MUST BE TAKEN TO PREVENT ANY INTERRUPTION TO AMTRAK'S OPERATION.

ALL CONTRACTORS MUST EXECUTE THE THEN CURRENT VERSION OF AMTRAK'S "TEMPORARY PERMIT TO ENTER UPON PROPERTY" WHICH REQUIRES ALL PERSONS THAT ARE ON OR ADJACENT TO AMTRAK PROPERTY SUCCESSFULLY COMPLETE THE CONTRACT ORIENTATION TRAINING. ALL CONTRACTORS MUST CARRY THEIR "AMTRAK CONTRACTOR ROADWAY WORKER PROTECTION" CARD WITH THEM AT ALL TIMES WHILE ON OR ADJACENT TO AMTRAK PROPERTY.

THE WORK ON AND ADJACENT TO AMTRAK PROPERTY SHALL CONFORM TO THE AMTRAK ENGINEERING PRACTICES EP3014.

CONCRETE NOTES:

CLASS "F" CONCRETE: CLASS "F" CONCRETE SHALL BE USED FOR KEEPER BLOCKS AND ~~CONCRETE BEARING PADS.~~ COMPLETE RECONSTRUCTION OF CONCRETE BEARING PADS. 1

CLASS "S" CONCRETE: CLASS "S" CONCRETE SHALL BE USED FOR PATCHING SUBSTRUCTURE COMPONENTS.

DECK REPAIRS: SURFACE REPAIRS TO THE DECK UNDERSIDE SHALL BE PERFORMED IN ACCORDANCE WITH THE SPECIAL PROVISION "CLEAN AND COAT EXPOSED REINFORCING STEEL". FULL DEPTH PATCHING AT DECK ENDS/JOINTS (AS REQUIRED) AS DIRECTED BY THE ENGINEER SHALL BE PERFORMED IN ACCORDANCE WITH THE SPECIAL PROVISION "FULL DEPTH PATCH (HIGH EARLY STRENGTH CONCRETE)". PARTIAL DEPTH PATCHING AT DECK ENDS/JOINTS (AS REQUIRED) AS DIRECTED BY THE ENGINEER SHALL BE PERFORMED IN ACCORDANCE WITH THE SPECIAL PROVISION "PARTIAL DEPTH PATCH".

JOINT SEAL: SEE SPECIAL PROVISIONS.

EXPOSED EDGES: EXPOSED EDGES OF CONCRETE SHALL BE BEVELED 1" X 1" UNLESS DIMENSIONED OTHERWISE.

CONCRETE COVER: ALL REINFORCEMENT SHALL HAVE TWO INCHES COVER UNLESS DIMENSIONED OTHERWISE.

REINFORCEMENT: ALL REINFORCEMENT SHALL BE ASTM A615 GRADE 60.

CONSTRUCTION JOINTS: CONSTRUCTION JOINTS, OTHER THAN THOSE SHOWN ON THE PLANS, WILL NOT BE PERMITTED WITHOUT THE PRIOR APPROVAL OF THE ENGINEER.

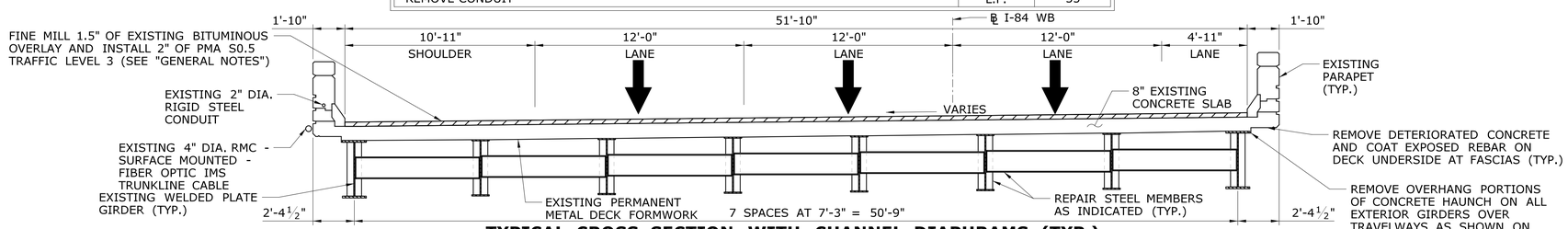

TYPICAL CROSS SECTION WITH CHANNEL DIAPHRAMS (TYP.)

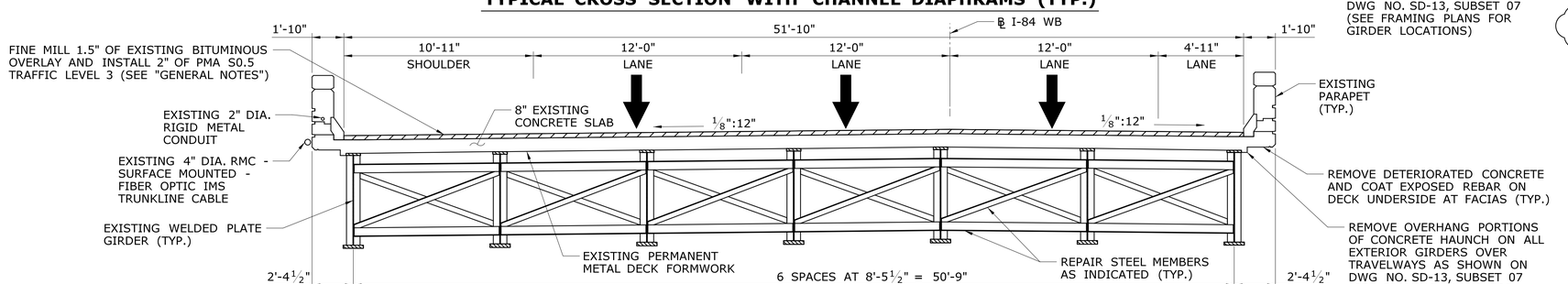

TYPICAL CROSS SECTION WITH CROSS FRAME DIAPHRAMS (TYP.)

TYPICAL CROSS SECTIONS

SCALE: ¼" = 1'-0"

ADDENDUM NO. 2

REV.	DATE	REVISION DESCRIPTION	SHEET NO.
1	10/20/17	CLASS "F" CONCRETE NOTE ADJUSTMENT	06.03.A2

THE INFORMATION, INCLUDING ESTIMATED QUANTITIES OF WORK, SHOWN ON THESE SHEETS IS BASED ON LIMITED INVESTIGATIONS BY THE STATE AND IS IN NO WAY WARRANTED TO INDICATE THE CONDITIONS OF ACTUAL QUANTITIES OF WORK WHICH WILL BE REQUIRED.

Plotted Date: 10/31/2017

DESIGNER/DRAFTER: **M. HABEK**
CHECKED BY: **S. DRECHSLER**
SCALE AS NOTED

STATE OF CONNECTICUT
DEPARTMENT OF TRANSPORTATION

Filename: ...\SB_MSH_Br03368_063_705_SECTION.dgn

SIGNATURE/BLOCK:
STATE OF CONNECTICUT · STEVEN J. DRECHSLER · No. 23441 · LICENSED PROFESSIONAL ENGINEER
Alfred Benesch & Company
90 National Drive
Glastonbury, CT

PROJECT TITLE:
REHABILITATION OF BRIDGE NOS. 03367 & 03368

TOWN: **HARTFORD**

DRAWING TITLE:
SECTIONS AND NOTES
BRIDGE NO. 03368

PROJECT NO. **063-705**
DRAWING NO. **S2-03**
SHEET NO. **06.03.A2**

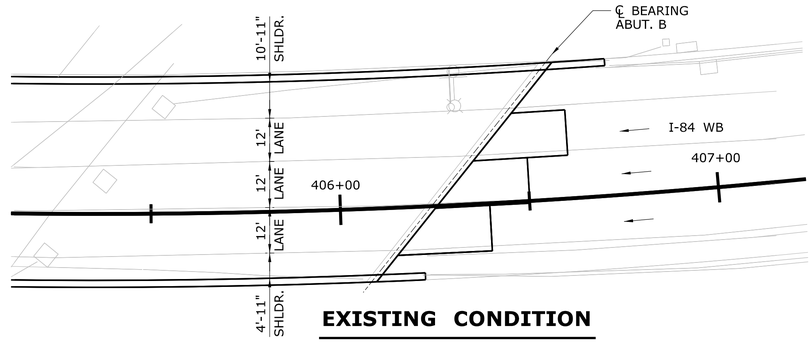

EXISTING CONDITION

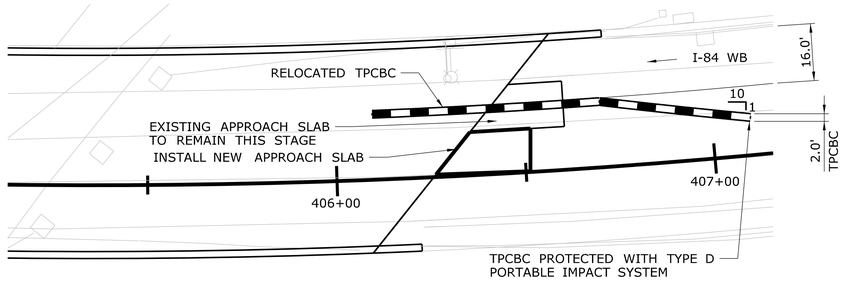

STAGE 1B

I-84 WB (1 LANE TO REMAIN IN SERVICE)
SUNDAY 12 AM TO 8 AM (8 HOURS)

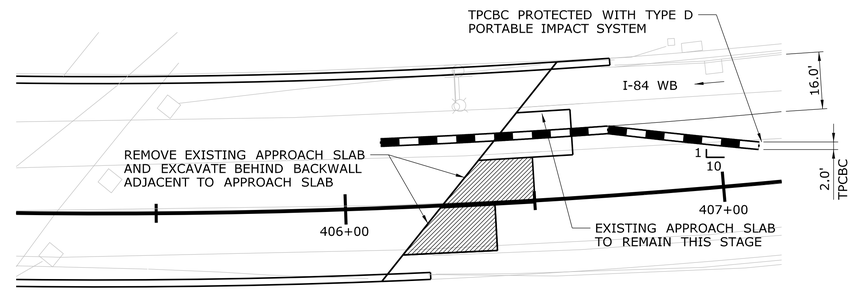

STAGE 1A

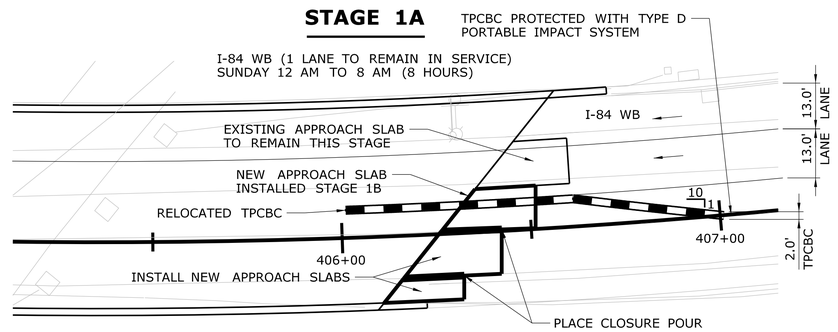

STAGE 2

I-84 WB (2 LANES REMAIN IN SERVICE)
FRIDAY 9 PM TO SATURDAY 9 AM (12 HOURS)

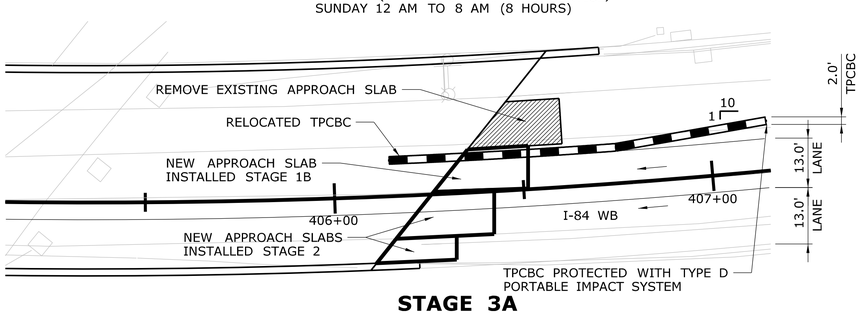

STAGE 3A

I-84 WB (2 LANES REMAIN IN SERVICE)
SATURDAY 9 PM TO SUNDAY 10 AM (13 HOURS)

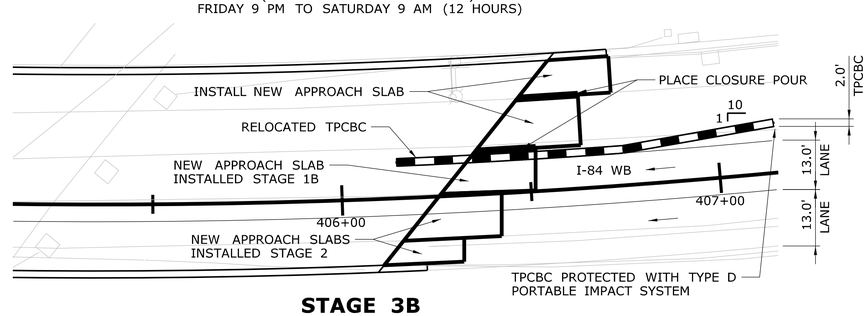

STAGE 3B

I-84 WB (2 LANES REMAIN IN SERVICE)
FRIDAY 9 PM TO SATURDAY 9 AM (12 HOURS) OR
SATURDAY 9 PM TO SUNDAY 10 AM (13 HOURS)

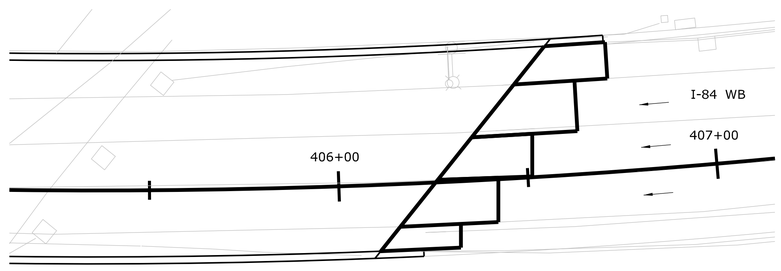

FINAL CONDITION

STAGE 1 NOTES

STAGE 1A SUNDAY MORNING (NIGHT 1, WEEKEND 1)

1. PLACE TEMPORARY PRECAST CONCRETE BARRIER CURB (TPCBC)
2. SAWCUT EXISTING PAVEMENT AND APPROACH SLAB
3. REMOVE EXISTING APPROACH SLAB
4. EXCAVATE BEHIND BACKWALL IN SHOULDER TO VERIFY IF APPROACH SLAB SEAT EXTENDS INTO SHOULDERS PER AS-BUILT DRAWINGS
5. BACKFILL EXCAVATION AND INSTALL TEMPORARY PAVEMENT
6. REMOVE TPCBC

STAGE 1B SUNDAY MORNING (NIGHT 2, WEEKEND 2)

1. PLACE TPCBC
2. EXCAVATE TO EXPOSE BACK OF BACKWALL
3. REPAIR CONCRETE SEAT, AS NECESSARY, AND INSTALL CLOSED CELL ELASTOMER
4. DRILL AND GROUT ANCHOR BARS IN CONCRETE SEATS
5. INSTALL PRECAST APPROACH CONCRETE SLAB IN CENTER LANE ONLY
6. FILL POCKETS WITH HIGH EARLY STRENGTH CONCRETE
7. POUR FLOWABLE FILL TO FILL VOIDS BELOW APPROACH SLAB
8. INSTALL TEMPORARY PAVEMENT
9. REMOVE TPCBC

STAGE 2 NOTES

FRIDAY TO SATURDAY (NIGHT 3, WEEKEND 3)

1. PLACE TPCBC
2. EXCAVATE TO EXPOSE BACK OF BACKWALL
3. REPAIR CONCRETE SEAT, AS NECESSARY, AND INSTALL CLOSED CELL ELASTOMER
4. DRILL AND GROUT ANCHOR BARS IN CONCRETE SEAT
5. INSTALL PRECAST APPROACH CONCRETE SLAB IN LEFT SHOULDER AND LEFT LANE
6. FILL POCKETS WITH HIGH EARLY STRENGTH CONCRETE
7. PLACE CLOSURE POURS BETWEEN APPROACH SLABS
8. POUR FLOWABLE FILL TO FILL VOIDS BELOW APPROACH SLAB
9. INSTALL TEMPORARY PAVEMENT
10. REMOVE TPCBC

STAGE 3 NOTES

STAGE 3A SATURDAY TO SUNDAY (NIGHT 4, WEEKEND 3)

1. PLACE TPCBC
2. SAWCUT EXISTING PAVEMENT AND APPROACH SLAB
3. REMOVE EXISTING APPROACH SLAB
4. EXCAVATE BEHIND BACKWALL IN SHOULDER TO VERIFY IF APPROACH SLAB SEAT EXTENDS INTO SHOULDERS PER AS-BUILT DRAWINGS
5. BACKFILL EXCAVATION AND INSTALL TEMPORARY PAVEMENT
6. REMOVE TPCBC

STAGE 3B FRIDAY TO SATURDAY (NIGHT 5, WEEKEND 4)

1. PLACE TPCBC
2. EXCAVATE TO EXPOSE BACK OF BACKWALL
3. REPAIR CONCRETE SEAT, AS NECESSARY AND INSTALL CLOSED CELL ELASTOMER
4. DRILL AND GROUT ANCHOR BARS IN CONCRETE SEAT
5. INSTALL PRECAST APPROACH CONCRETE SLAB IN RIGHT SHOULDER AND RIGHT LANE
6. FILL POCKETS WITH HIGH EARLY STRENGTH CONCRETE
7. PLACE CLOSURE POURS BETWEEN APPROACH SLABS
8. POUR FLOWABLE FILL TO FILL VOIDS BELOW APPROACH SLAB
9. INSTALL TEMPORARY PAVEMENT
10. REMOVE TPCBC

NOTES

1. FINAL INSTALLATION OF WATERPROOFING MEMBRANE AND WEARING SURFACE WILL BE COMPLETED WITH THE REMAINING PORTIONS OF THE BRIDGE PER THE LIMITATIONS OF OPERATIONS CHART LISTED IN THE PROSECUTION AND PROGRESS SPECIFICATION.
2. FOR PROPOSED APPROACH SLAB DETAILS SEE DWG. S2-34.
3. TEMPORARY PRECAST CONCRETE BARRIER CURB (TPCBC) (STRUCTURE) SHALL BE ANCHORED ONTO BRIDGE DECK AND APPROACH SLAB. OFF OF BRIDGE UTILIZE HIGHWAY ITEM TEMPORARY PRECAST CONCRETE BARRIER CURB.
4. TPCBC SHALL BE USED IN CONJUNCTION WITH THE STANDARD TRAFFIC CONTROL PLANS LISTED IN THE SPECIAL PROVISION "MAINTENANCE AND PROTECTION OF TRAFFIC".

NEW SHEET ADDED BY ADDENDUM NO. 2

REV.	DATE	REVISION DESCRIPTION	SHEET NO.

THE INFORMATION, INCLUDING ESTIMATED QUANTITIES OF WORK, SHOWN ON THESE SHEETS IS BASED ON LIMITED INVESTIGATIONS BY THE STATE AND IS IN NO WAY WARRANTED TO INDICATE THE CONDITIONS OF ACTUAL QUANTITIES OF WORK WHICH WILL BE REQUIRED.

Plotted Date: $DATE$

DESIGNER/DRAFTER: R.MEARS
CHECKED BY: S. DRECHSLER
SCALE: 1" = 20'

STATE OF CONNECTICUT
DEPARTMENT OF TRANSPORTATION

Filename: $FILEA$

SIGNATURE/BLOCK:
STATE OF CONNECTICUT REGISTERED PROFESSIONAL ENGINEER NO. 23441 LICENSED
Alfred Benesch & Company
90 National Drive
Glastonbury, CT

PROJECT TITLE:
REHABILITATION OF BRIDGE NOS. 03367 & 03368

TOWN: **HARTFORD**

DRAWING TITLE:
APPROACH SLAB STAGING
BRIDGE NO. 03368

PROJECT NO. 063-705
DRAWING NO. S2-33
SHEET NO. 06.33.A2

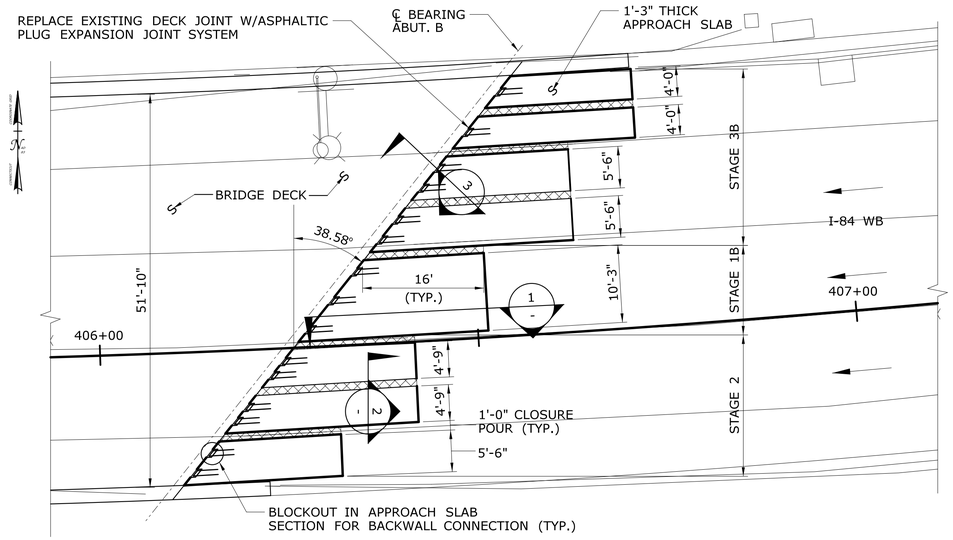

APPROACH SLAB PLAN

SCALE: 1" = 10'-0"

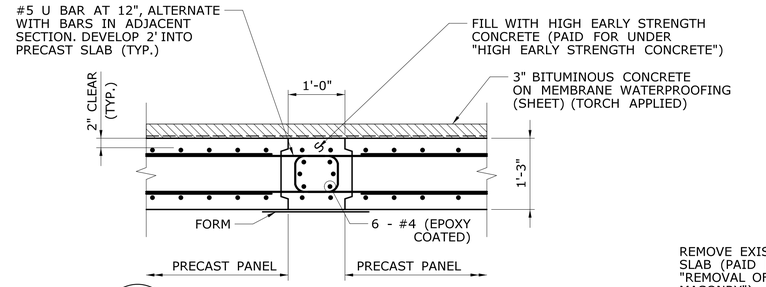

2 - APPROACH SLAB CLOSURE POUR DETAIL

SCALE: 3/4" = 1'-0"

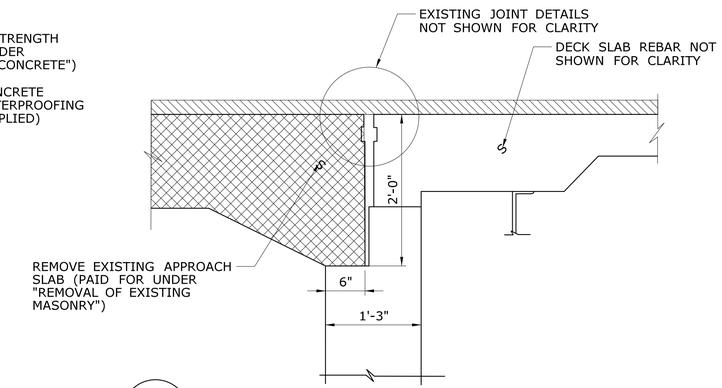

3 - BACKWALL SECTION (EXISTING)

SCALE: 1" = 1'-0"

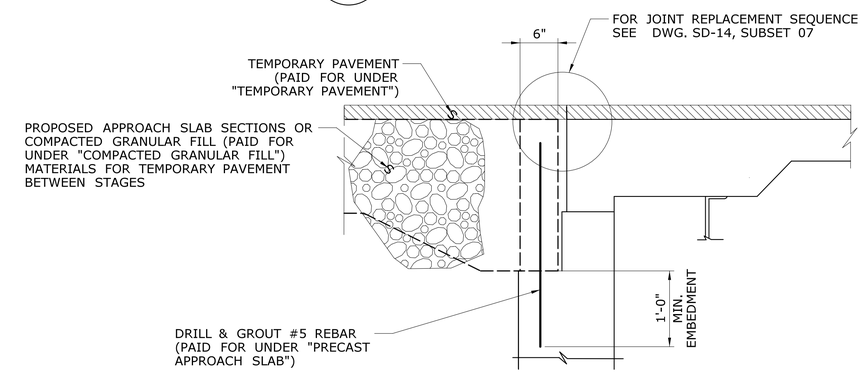

3 - BACKWALL SECTION (DURING STAGES)

SCALE: 1" = 1'-0"

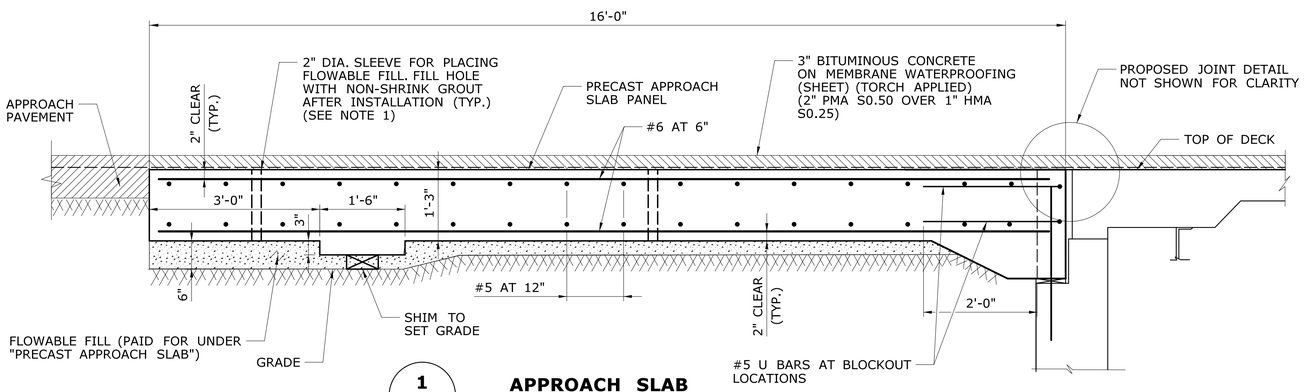

1 - APPROACH SLAB (LONGITUDINAL SECTION)

SCALE: 3/4" = 1'-0"

NOTE:
CONTRACTOR SHALL DETERMINE SPACING OF OPENINGS IN ORDER TO ENSURE THE VOID BELOW THE APPROACH SLAB IS COMPLETELY FILLED.

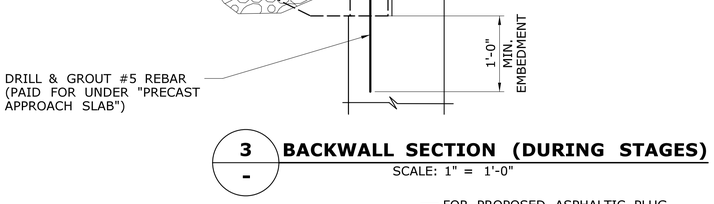

3 - BACKWALL SECTION (PROPOSED)

SCALE: 1" = 1'-0"

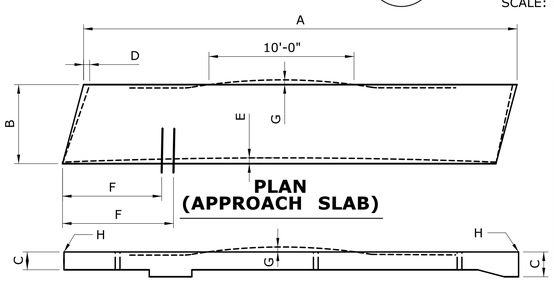

PLAN (APPROACH SLAB)

LONGITUDINAL SECTION

PRECAST TOLERANCES

NOT TO SCALE

APPROACH SLAB TOLERANCES

A	LENGTH	±1/4"
B	WIDTH (OVERALL)	±1/4"
C	DEPTH (OVERALL)	±1/4"
D	VARIATION FROM SPECIFIED PLAN END SQUARENESS OR SKEW	±1/2"
E	SWEEP OVER MEMBER LENGTH	±1/2"
F	LOCATION OF PROJECTING REINFORCING MEASURED FROM A COMMON REFERENCE POINT	±1/2"
G	LOCAL SMOOTHNESS OF ANY SURFACE (IN 10 FEET)	±1/8"
H	ERECTION ELEVATION TOLERANCE	±1/4"

NOTE:
1. CONTRACTOR SHALL FIELD VERIFY DIMENSIONS PRIOR TO FABRICATION.
2. THE DESIGN FOR THE PRECAST APPROACH SLAB IN STAGE 1B ASSUMES THE USE OF GROVE GMK5275 CRANE BY MANITOWAC.
3. THE CONTRACTOR SHALL SUBMIT A CRANE FOR ENGINEER APPROVAL PER "PRECAST APPROACH SLAB" SPECIFICATION.

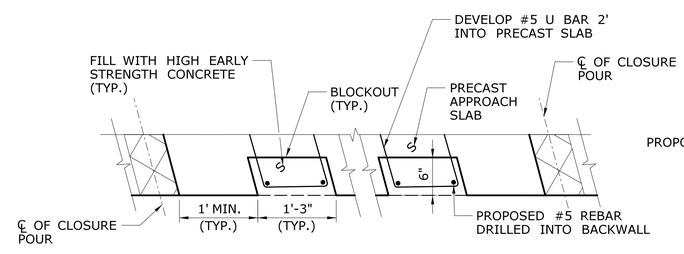

PARTIAL PLAN VIEW OF PRECAST APP. SLAB ATTACHMENT TO BACKWALL

NOT TO SCALE

NEW SHEET ADDED BY ADDENDUM NO. 2

REV.	DATE	REVISION DESCRIPTION	SHEET NO.

THE INFORMATION, INCLUDING ESTIMATED QUANTITIES OF WORK, SHOWN ON THESE SHEETS IS BASED ON LIMITED INVESTIGATIONS BY THE STATE AND IS IN NO WAY WARRANTED TO INDICATE THE CONDITIONS OF ACTUAL QUANTITIES OF WORK WHICH WILL BE REQUIRED.

Plotted Date: 10/31/2017

DESIGNER/DRAFTER: S. DAS
CHECKED BY: S. DRECHSLER
SCALE AS NOTED

STATE OF CONNECTICUT
DEPARTMENT OF TRANSPORTATION

Filename: ..\SB_MSH_Br03368_063_705_ABUT B-Approach Slab.dgn

SIGNATURE/BLOCK: Alfred Benesch & Company, 90 National Drive, Glastonbury, CT

PROJECT TITLE: REHABILITATION OF BRIDGE NOS. 03367 & 03368

TOWN: HARTFORD

DRAWING TITLE: APPROACH SLAB DETAILS BRIDGE 03368

PROJECT NO. 063-705
DRAWING NO. S2-34
SHEET NO. 06.34.A2

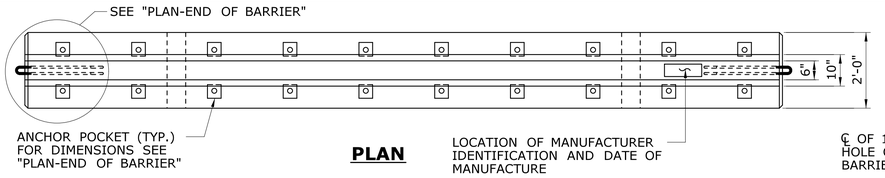

PLAN

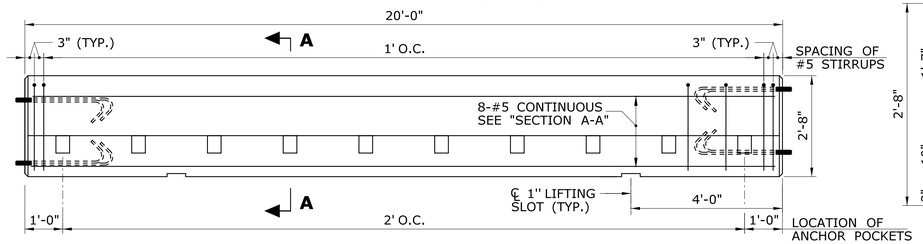

ELEVATION
PRECAST BARRIER UNIT (STRUCTURE)
Scale: ½"=1'-0"

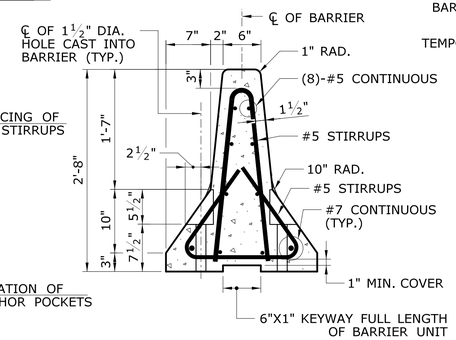

SECTION A-A
Scale: 1"=1'-0"

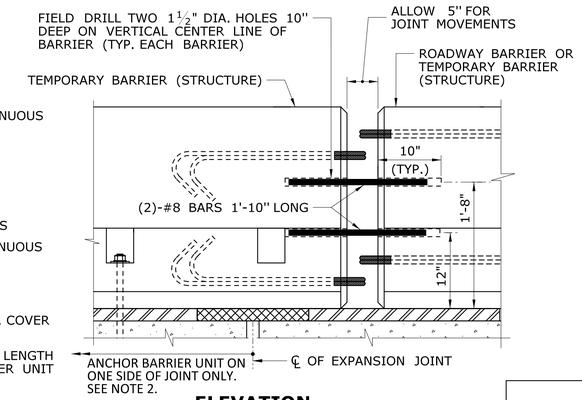

ELEVATION
BARRIER CONNECTION DETAILS
AT EXPANSION JOINTS (CASE II SHOWN)
Scale: 1"=1'-0"

NOTES

1. THE TEMPORARY BARRIER SHOWN ON THIS SHEET SHALL BE ANCHORED ONTO BRIDGE DECKS (SEE "TEMPORARY ANCHORAGE SYSTEM") WHEN IT IS USED TO PROTECT A VERTICAL DROP-OFF. THE TEMPORARY ANCHORAGE SYSTEM SHALL CONFORM TO THE FOLLOWING:

   A. PRESTRESSED DECK UNITS: THREADED INSERTS SHALL BE USED FOR SECURING TEMPORARY BARRIER (STRUCTURE) TO PRESTRESSED DECK UNITS. THE THREADED INSERTS SHALL BE CAST INTO THE DECK UNITS DURING FABRICATION AND SHALL BE LOCATED AS REQUIRED TO ACCOMMODATE THE STAGE CONSTRUCTION. SEE SPECIAL PROVISIONS FOR ADDITIONAL INFORMATION.

   B. CHEMICAL ANCHORING: THIS CONSISTS OF DRILLING HOLES IN NEW OR EXISTING CONCRETE, PLACING THREADED ANCHORS IN THE HOLES, AND SECURING THE ANCHORS WITH A PRE-APPROVED CHEMICAL ANCHOR MATERIAL WHICH CONFORMS TO M.03.01-15 OF THE STANDARD SPECIFICATIONS. HOLE DIAMETER SHALL BE DETERMINED BY THE MANUFACTURER OF THE CHEMICAL ANCHORING MATERIAL.

   C. THROUGH-BOLTING: THIS CONSISTS OF DRILLING THROUGH DECK SLABS AND SECURING REMOVABLE ANCHORS ON THE UNDERSIDE WITH PLATE WASHERS AND NUTS. THROUGH-BOLTING IS NOT PERMITTED ON NEW CONSTRUCTION OR PRESTRESSED CONCRETE. MAXIMUM HOLE SIZE IN SLAB = 1½".

2. NUMBER OF ANCHORS: ON THE TRAFFIC SIDE OF A TYPICAL BARRIER, ANCHORS SHALL BE INSTALLED IN ALL POCKETS. AT BARRIER UNITS WHICH STRADDLE BRIDGE EXPANSION JOINTS THE ANCHOR AND CONNECTION DETAILS SHALL CONFORM TO TABLE "A".

TABLE "A": BARRIER UNITS AT EXP. JOINTS			
CASE	SPAN LENGTH CONTRIBUTING TO MOVEMENT AT THE EXPANSION JOINT.	METHOD OF END CONNECTION TO ABUTTING BARRIER UNIT. (WHERE MOVEMENT WILL OCCUR)	ANCHOR REQUIREMENTS FOR THE BARRIER UNIT WHICH STRADDLES THE BRIDGE JOINT
I.	UP TO 100'	USE 1" CONNECTION ROD BUT DO NOT OVER TIGHTEN THE NUTS AND ALLOW ROOM FOR EXPANSION AROUND THE ROD AND LOOPS.	ON ONE SIDE OF THE JOINT ONLY, INSTALL AS MANY ANCHORS AS POSSIBLE ON THE TRAFFIC SIDE OF THE BARRIER. ON THE OTHER SIDE OF THE JOINT DO NOT INSTALL ANCHORS.
II.	100' TO 400'	FIELD DRILL HOLES IN ENDS OF BOTH UNITS AND CONNECT WITH 2-#8 BARS. FOR DETAILS SEE "BARRIER CONNECTION DETAILS".	ON ONE SIDE OF THE JOINT ONLY, INSTALL A TOTAL OF 10 ANCHORS. FILL THE POCKETS ON THE TRAFFIC SIDE BEFORE FILLING THE POCKETS ON THE DROP-OFF SIDE. IF THIS CANNOT BE ACHIEVED SEE III BELOW.
III.	OVER 400' AND BARRIER LAYOUTS WHICH DO NOT SATISFY II.	TO BE DESIGNED BY CONTRACTOR AND REVIEWED BY ENGINEER. COST OF DESIGNING AND FURNISHING SPECIAL BARRIER UNITS OR ATTACHMENTS PAID FOR UNDER "TPCBC (STRUCTURE)".	TO BE DESIGNED BY CONTRACTOR AND REVIEWED BY ENGINEER. COST OF DESIGNING AND FURNISHING SPECIAL BARRIER UNITS OR ATTACHMENTS PAID FOR UNDER "TPCBC (STRUCTURE)".

3. THE WORK DONE ON THIS SHEET, WITH THE EXCEPTION OF THE DELINEATORS, SHALL BE PAID FOR UNDER THE ITEM "TEMPORARY PRECAST CONCRETE BARRIER CURB (STRUCTURE)".

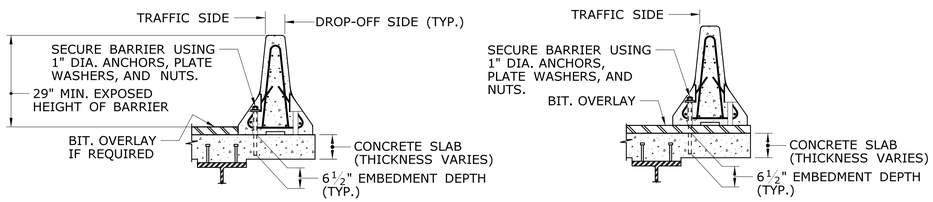

BARRIER ON CONCRETE | **BARRIER ON BIT. OVERLAY**

CHEMICAL ANCHORING OPTION
(SEE NOTE 1B)

NOTES:
1) FOR ANCHORING INTO DECK UNITS SEE NOTE 1A.
2) EXISTING REINFORCING BARS IN SLAB NOT DRAWN FOR CLARITY. AVOID DAMAGING THE REINFORCING BARS IN ALL NEWLY CONSTRUCTED SLABS.

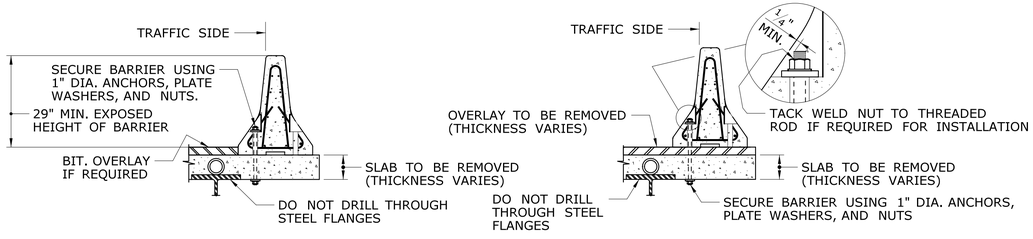

BARRIER ON CONCRETE | **BARRIER ON BIT. OVERLAY**

THRU-BOLTING OPTION
(SEE NOTE 1C)

TEMPORARY ANCHORAGE SYSTEM
Scale: ½"=1'-0"

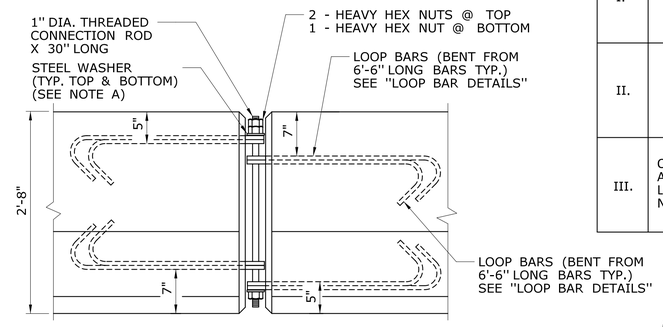

ELEVATION
BARRIER CONNECTION DETAILS
Scale: 1"=1'-0"

NOTES FOR CONNECTION ROD DETAILS
(SEE "ELEVATION-BARRIER CONNECTION DETAILS")

A. PLAIN CIRCULAR STEEL WASHERS SHALL BE MANUFACTURED WITH THE FOLLOWING DIMENSIONS:
   OUTSIDE DIAMETER = $2\frac{3}{4}$"($+\frac{1}{4}$", -0")
   INSIDE DIAMETER = $1\frac{1}{4}$" ($+/-\frac{1}{16}$")
   THICKNESS = $\frac{3}{16}$"

B. THE NUTS ON THE CONNECTION ROD SHALL BE TURNED UNTIL THE BOTTOM WASHER IS DRAWN UP AGAINST THE LOOP BAR. THE LOOP BARS SHALL NOT BE BENT DUE TO THE TIGHTENING PROCESS.

C. FOR EASE OF REMOVAL THE THREADS ON THE CONNECTION RODS AND NUTS SHALL BE WAXED.

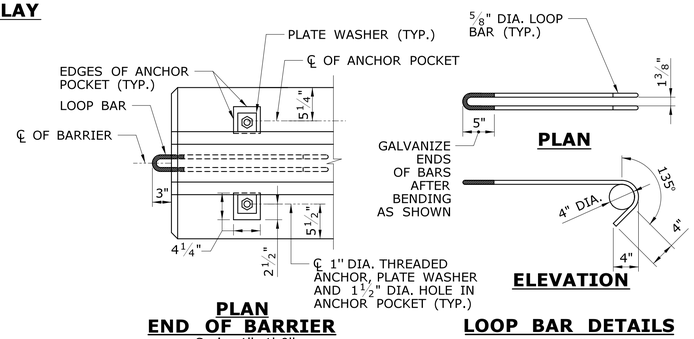

PLAN
END OF BARRIER
Scale: 1"=1'-0"

LOOP BAR DETAILS
Scale: 1"=1'-0"

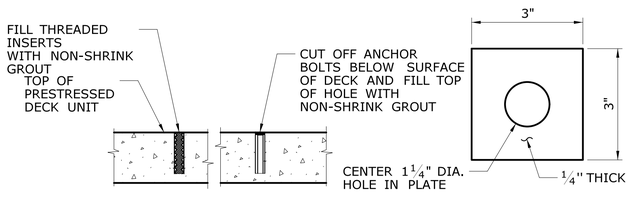

FILLING OF ANCHOR HOLES
Scale: 1"=1'-0"

PLATE WASHER
NOT TO SCALE

NEW SHEET ADDED BY ADDENDUM NO. 2

REV.	DATE	REVISION DESCRIPTION	SHEET NO.

THE INFORMATION, INCLUDING ESTIMATED QUANTITIES OF WORK, SHOWN ON THESE SHEETS IS BASED ON LIMITED INVESTIGATIONS BY THE STATE AND IS IN NO WAY WARRANTED TO INDICATE THE CONDITIONS OF ACTUAL QUANTITIES OF WORK WHICH WILL BE REQUIRED.

Plotted Date: 10/31/2017

DESIGNER/DRAFTER: CTDOT
CHECKED BY: CTDOT
SCALE AS NOTED

STATE OF CONNECTICUT
DEPARTMENT OF TRANSPORTATION

Filename: ...\SB_MSH_DETAILS_063_708_TPCBC.dgn

SIGNATURE/BLOCK:
STATE OF CONNECTICUT REGISTERED PROFESSIONAL ENGINEER NO. 23441
Alfred Benesch & Company
90 National Drive
Glastonbury, CT

PROJECT TITLE:
REHABILITATION OF BRIDGE NOS. 03367 & 03368

TOWN: HARTFORD

DRAWING TITLE:
TEMPORARY PRECAST CONCRETE BARRIER CURB

PROJECT NO. 063-705
DRAWING NO. S2-35
SHEET NO. 06.35.A2