03 - STRUCTURES
INDEX OF DRAWINGS

DRAWING NUMBER	DRAWING TITLE	DRAWING NUMBER	DRAWING TITLE
S-01	SUBSET COVER SHEET - INDEX OF DRAWINGS - 1	S-21	GENERAL PLAN - BRIDGE NO. 00468
S-02	SUBSET COVER SHEET - INDEX OF DRAWINGS - 2	S-22	TYPICAL SECTIONS - BRIDGE NO. 00468
S-03	SUBSTRUCTURE REPAIR DETAILS - 1	S-23	ABUTMENT NO. 1 - BRIDGE NO. 00468
S-04	SUBSTRUCTURE REPAIR DETAILS - 2	S-24	ABUTMENT NO. 2 - BRIDGE NO. 00468
S-05	SUBSTRUCTURE REPAIR DETAILS - 3	S-25	PIER - BRIDGE NO. 00468
S-06	SUBSTRUCTURE REPAIR DETAILS - 4	S-26	PAD REPAIRS - BRIDGE NO. 00468
S-07	DECK REHABILITATION PATCH DETAILS - 1	S-27	DRAINAGE REPAIRS - BRIDGE NO. 00468
S-08	DECK REHABILITATION PATCH DETAILS - 2	S-28	FRAMING PLAN - BRIDGE NO. 00468
S-09	CONCRETE REPAIR DETAILS	S-29	PAINTING DETAILS - BRIDGE NO. 00468
S-10	GENERAL JOINT NOTES	S-30	DECK PLAN - BRIDGE NO. 00468
S-11	ASPHALTIC PLUG EXP. JOINT DETAILS - 1	S-31	SIDEWALK REPAIRS - BRIDGE NO. 00468
S-12	ASPHALTIC PLUG EXP. JOINT DETAILS - 2	S-32	DECK END DETAILS - 1 - BRIDGE NO. 00468
S-13	ASPHALTIC PLUG EXP. JOINT DETAILS - 3	S-33	DECK END DETAILS - 2 - BRIDGE NO. 00468
S-14	ASPHALTIC PLUG EXP. JOINT DETAILS - 4	S-34	DECK END DETAILS - 3 - BRIDGE NO. 00468
S-15	ASPHALTIC PLUG EXP. JOINT DETAILS - 5	S-35	MISCELLANEOUS - BRIDGE NO. 00468
S-16	ASPHALTIC PLUG EXP. JOINT DETAILS - 6	S-36	TEMP. PLATE DETAIL - BRIDGE NO. 00468
S-17	STEEL REPAIR DETAILS - 1	S-37	METAL BRIDGE RAIL - BRIDGE NO. 00468
S-18	STEEL REPAIR DETAILS - 2	S-38	GENERAL PLAN - BRIDGE NO. 01154
S-19	STEEL REPAIR DETAILS - 3	S-39	TYPICAL SECTIONS - BRIDGE NO. 01154
S-20	JACKING DETAILS	S-40	BEARING PAD REPAIRS - BRIDGE NO. 01154

DESIGNED BY:
CLOSE, JENSEN AND MILLER, PC

STATE OF CONNECTICUT
JOHN H. MILLER
NO. 4142
LICENSED
PROFESSIONAL ENGINEER

Close, Jensen and Miller, P.C.
1137 Silas Deane Highway
Wethersfield, CT 06109

Digitally signed by John Miller, P.E.
Date: 2017.08.08 12:52:11-04'00'

REV.	DATE	REVISION DESCRIPTION	SHEET NO.

THE INFORMATION, INCLUDING ESTIMATED QUANTITIES OF WORK, SHOWN ON THESE SHEETS IS BASED ON LIMITED INVESTIGATIONS BY THE STATE AND IS IN NO WAY WARRANTED TO INDICATE THE CONDITIONS OF ACTUAL QUANTITIES OF WORK WHICH WILL BE REQUIRED.

Plotted Date: 8/8/2017

DESIGNER/DRAFTER: D.C./S.C.
CHECKED BY: J.H.M. II

STATE OF CONNECTICUT
DEPARTMENT OF TRANSPORTATION

Filename: ..\SB_MSH_0_174_402_S_01_INDEX_SHEET_1.dgn

SIGNATURE/BLOCK:
STATE OF CONNECTICUT JOHN H. MILLER NO. 4142 LICENSED PROFESSIONAL ENGINEER
Close, Jensen and Miller, P.C.
1137 Silas Deane Highway
Wethersfield, CT 06109

PROJECT TITLE:
BEAM END REPAIR AND BEARING REPLACEMENT IN DISTRICT 4

TOWN: **VARIOUS**

DRAWING TITLE: **SUBSET COVER SHEET INDEX OF DRAWINGS-1**

PROJECT NO. **174-402**
DRAWING NO. **S-01**
SHEET NO. **03.01**

03 - STRUCTURES
INDEX OF DRAWINGS

DRAWING NUMBER	DRAWING TITLE	DRAWING NUMBER	DRAWING TITLE
S-41	FRAMING PLAN - BRIDGE NO. 01154		
S-42	STEEL REPAIRS - 1 - BRIDGE NO. 01154		
S-43	PAINTING DETAILS - 1 - BRIDGE NO. 01154		
S-44	PAINTING DETAILS - 2 - BRIDGE NO. 01154		
S-45	PAINTING DETAILS - 3 - BRIDGE NO. 01154		
S-46	DECK PLAN - BRIDGE NO. 01154		
S-47	DECK PLAN GRID - 1 -BRIDGE NO. 01154		
S-48	DECK PLAN GRID - 2 -BRIDGE NO. 01154		
S-49	DECK END REPAIRS - BRIDGE NO. 01154		
S-50	MISCELLANEOUS - BRIDGE NO. 01154		
S-51	METAL BRIDGE RAIL - BRIDGE NO. 01154		
S-52	GENERAL PLAN - BRIDGE NO. 01161		
S-53	TYPICAL SECTIONS - BRIDGE NO. 01161		
S-54	FRAMING PLAN - BRIDGE NO. 01161		
S-55	STEEL REPAIRS - 1 - BRIDGE NO. 01161		
S-56	PAINTING DETAILS - 1 - BRIDGE NO. 01161		
S-57	PAINTING DETAILS - 2 - BRIDGE NO. 01161		
S-58	PAINTING DETAILS - 3 - BRIDGE NO. 01161		
S-59	PAINTING DETAILS - 4 - BRIDGE NO. 01161		

SUBSTRUCTURE REPAIR NOTES

1. THE SUBSTRUCTURE DETERIORATION LOCATION AND EXTENT AND REPAIR DIMENSIONS SHOWN ON THE PLANS ARE APPROXIMATE AND ARE BASED ON LIMITED FIELD OBSERVATIONS AND BRIDGE SAFETY INSPECTION REPORTS. THE INFORMATION IS INTENDED TO BE USED AS A GUIDE AND DOES NOT NECESSARILY REFLECT THE CURRENT CONDITION OF THE STRUCTURE. THE EXACT LOCATION AND LIMITS OF DETERIORATED CONCRETE TO BE REPAIRED SHALL BE DETERMINED BY THE ENGINEER DURING CONSTRUCTION.

2. THE CONTRACTOR SHALL PROVIDE SAFE ACCESS TO THE ABUTMENTS AND PIERS FOR THE ENGINEER TO DELINEATE AND REVIEW THE REPAIR WORK. THE COST OF PROVIDING ACCESS SHALL BE INCLUDED IN THE COST OF APPROPRIATE REPAIR ITEMS.

3. THE CONTRACTOR SHALL NOT PERFORM ANY REPAIR WORK WITHOUT PRIOR APPROVAL FROM THE ENGINEER.

4. IF, AFTER CONCRETE REMOVAL, THE REINFORCING STEEL HAS AT LEAST ONE HALF OF ITS SURFACE AREA EXPOSED, THE CONCRETE SHALL BE FURTHER REMOVED TO A DEPTH OF 1" BEHIND THE REINFORCING STEEL.

5. IF, DURING REMOVAL OF DETERIORATED CONCRETE, THE CONTRACTOR DAMAGES EXISTING REINFORCEMENT TO THE EXTENT REQUIRING REPLACEMENT, ANY ADDITIONAL CONCRETE REMOVAL AND REPLACEMENT WITH PATCHING MATERIAL SHALL BE AT THE CONTRACTOR'S EXPENSE.

6. THE CONTRACTOR SHALL NOT REMOVE CONCRETE EXCEPT IN THE PRESENCE OF THE ENGINEER OR HIS APPOINTED REPRESENTATIVE. IF THE AREA REMOVED EXCEEDS 20 SQUARE FEET, OR MORE THAN 25% OF COLUMN CROSS SECTIONAL PERIMETER, OR IF THE REMOVAL DEPTH EXCEEDS MORE THAN $1\frac{1}{2}$" BEHIND THE MAIN REINFORCING BARS, THE CONTRACTOR SHALL CEASE REMOVAL OPERATIONS AND NOTIFY THE ENGINEER IMMEDIATELY. THE ENGINEER SHALL DETERMINE IF THE REMOVAL OPERATIONS REDUCE STRUCTURAL CAPACITY OF THE ELEMENT.

7. IN AREAS WHERE EXTENSIVE DETERIORATION EXISTS ON THE UNDERSIDE OF THE CANTILEVERED PORTION OF PIER CAPS, THE AMOUNT OF DETERIORATED CONCRETE REMOVED AND PATCHED AT ONE TIME SHALL BE LIMITED TO A 2 SQUARE FOOT AREA MAX. AREAS CLOSEST TO THE PIER COLUMN SHALL BE REPAIRED FIRST. SUBSEQUENT PATCHING SHALL PROCEED OUTWARD TOWARD THE FREE END OF THE PIER CAP. WORK CAN BE MOVED TO THE NEXT STRIP ONLY WHEN THE CONCRETE ON THE REPAIRED SECTION HAS OBTAINED ITS DESIGNED STRENGTH. IF THE DEPTH OF THE DETERIORATED CONCRETE EXCEEDS 5", CONTRACTOR SHALL STOP REMOVING CONCRETE AND NOTIFY THE ENGINEER. CONTRACTOR SHALL NOT WORK ON ADJACENT SECTIONS OF THE COLUMN OR PIER CAP AT ONE TIME. SEE SPECIAL PROVISIONS FOR "CLASS "S" CONCRETE". SEQUENCING OF PATCH AREA IS TO BE APPROVED BY THE ENGINEER.

8. NEW CONCRETE PATCHES SHALL MATCH SHAPE OF EXISTING CONCRETE SURFACES. REPAIR CONFIGURATIONS SHOULD BE KEPT AS SIMPLE AS POSSIBLE, PREFERABLY WITH SQUARE CORNERS. COLOR OF NEW PATCH CONCRETE SHALL MATCH COLOR OF THE ADJACENT SURFACES AS CLOSELY AS POSSIBLE.

9. THE EXISTING STRUCTURE INFORMATION, INCLUDING DIMENSIONS SHOWN ON THESE DRAWINGS, IS BASED ON ORIGINAL DESIGN DRAWINGS AND SUBSEQUENT REPAIR DRAWINGS AND NOT GUARANTEED

10. SPALLS, HOLLOW, DETERIORATED AND SCALE AREAS SHALL BE REPAIRED IN ACCORDANCE WITH "VARIABLE DEPTH PATCH REPAIR DETAIL" OR "CLASS 'S' CONCRETE REPAIR DETAIL" SHOWN ON DWG. NOS. S-04 AND S-05.

REFERENCES:

1. SEE DWG. NO. S-04 FOR SUBSTRUCTURE REPAIR DETAILS.
2. SEE DWG. NO. S-06 FOR EMBEDDED GALVANIC ANODE DETAILS.
3. SEE DWG. NOS. S-23, S-24, AND S-25 FOR ABUTMENT, PIER, AND WINGWALL REPAIR LOCATIONS.

CONCRETE DETERIORATION LEGEND

- CRACK (HAIRLINE UNLESS DIMENSIONED OTHERWISE) (H.L.C.)
- SPALL AREA WITH EXPOSED REINFORCING (S.A. W/ EXP. REBAR)
- SPALL AREA (S.A.)
- HOLLOW AREA (H.A.)
- SHALLOW REBAR (SH. A.)
- HONEY COMB AREA (H.C.A.)
- SCALE AREA (SC. A.)
- MAP CRACKS (MPCR)
- E EFFLORESCENCE (EFFLO.)

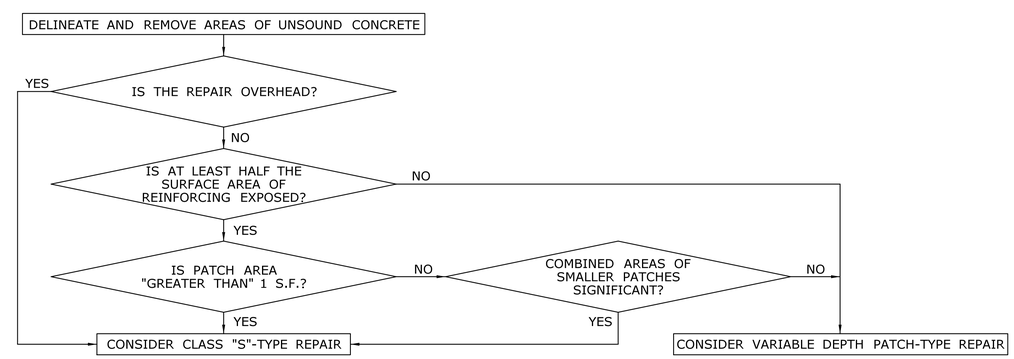

FLOWCHART TO DETERMINE TYPE OF CONCRETE REPAIR

REV.	DATE	REVISION DESCRIPTION	SHEET NO.

THE INFORMATION, INCLUDING ESTIMATED QUANTITIES OF WORK, SHOWN ON THESE SHEETS IS BASED ON LIMITED INVESTIGATIONS BY THE STATE AND IS IN NO WAY WARRANTED TO INDICATE THE CONDITIONS OF ACTUAL QUANTITIES OF WORK WHICH WILL BE REQUIRED.

Plotted Date: 8/8/2017

DESIGNER/DRAFTER: D.C./S.C.
CHECKED BY: J.H.M. II

STATE OF CONNECTICUT
DEPARTMENT OF TRANSPORTATION

Filename: ...\SB..MSH..0..174..402..S..03..SUBRPR-1.dgn

SIGNATURE/BLOCK:
Close, Jensen and Miller, P.C.
1137 Silas Deane Highway
Wethersfield, CT 06109

PROJECT TITLE: BEAM END REPAIR AND BEARING REPLACEMENT IN DISTRICT 4

TOWN: VARIOUS

DRAWING TITLE: SUBSTRUCTURE REPAIR DETAILS - 1

PROJECT NO. 174-402
DRAWING NO. S-03
SHEET NO. 03.03

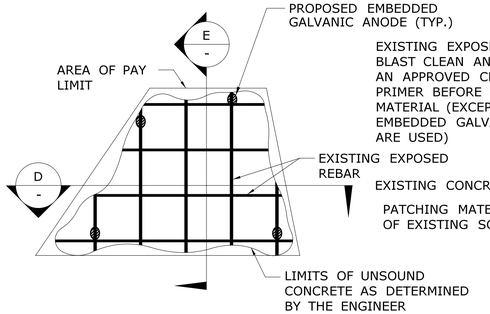

ELEVATION

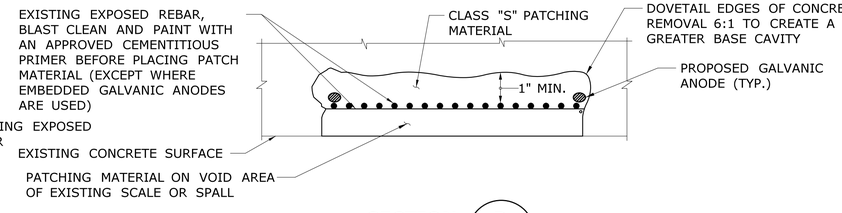

SECTION D / -

NOTE

AFTER REMOVAL OF DETERIORATED CONCRETE, IF EXISTING REINFORCING IS NOT EXPOSED, DEMOLISH SOUND CONCRETE MINIMUM 1" BEYOND EXISTING REINFORCING.

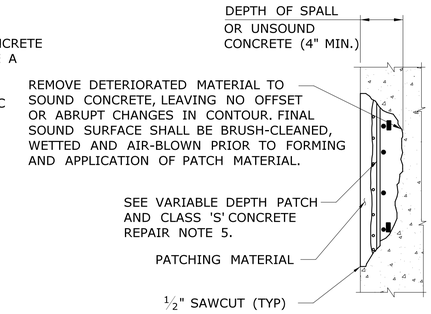

SECTION E / -

CLASS 'S' CONCRETE REPAIR DETAIL - WITHOUT BUILD-OUT

N.T.S.

CLASS 'S' CONCRETE REPAIR PROCEDURE

1. CLASS 'S' CONCRETE REPAIR DETAIL APPLIES TO DETERIORATED AREAS OF REINFORCED CONCRETE WHERE MORE THAN HALF THE REINFORCING IS EXPOSED AND THE AREA IS GREATER THAN 1 SQUARE FOOT.
2. THE LIMITS OF THE REPAIRS SHALL BE SAWCUT ALONG NEAT LINES WHERE PRACTICAL TO A DEPTH OF ½" TO PRODUCE A CLEAN EDGE. SEE SPECIAL PROVISIONS.
3. REMOVE DETERIORATED MATERIAL TO SOUND CONCRETE LEAVING NO OFFSET OR ABRUPT CHANGES IN CONTOUR.
4. CLEAN EXISTING REINFORCING STEEL AND CONCRETE (NEWLY EXPOSED), SEE SPECIFICATIONS. MISSING OR DETERIORATED REINFORCING STEEL SHALL BE REPLACED AND SPLICED AS SHOWN IN DETAIL OR AS DIRECTED BY THE ENGINEER. COST OF NEW REINFORCING STEEL AND SPLICING TO BE PAID UNDER THE COST FOR PATCHING MATERIAL.
5. INSTALL EMBEDDED GALVANIC ANODES AFTER BARS ARE CLEANED AND PRIOR TO APPLYING PATCHING MATERIAL.
6. FORM AND PATCH SURFACE.
7. A MINIMUM OF 72 HOURS SHALL ELAPSE BETWEEN PLACING OF CONCRETE AND START OF NEXT ADJACENT PATCH.
8. ALL NEW EXPOSED CONCRETE SURFACES WITHIN AREA TO BE REPAIRED SHALL BE RUBBED TO PRODUCE A SMOOTH FINISH.
9. ANODES TO BE INSTALLED IN ALL PATCHES. ANODES SHALL BE PAID FOR AS "EMBEDDED GALVANIC ANODES" AND SHALL BE INSTALLED PER THE REQUIREMENTS OF THE SPECIAL PROVISIONS. MAXIMUM ANODE SPACING SHALL BE 20" ON CENTER.

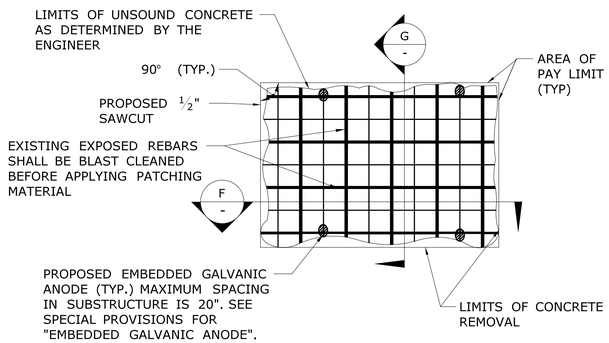

ELEVATION

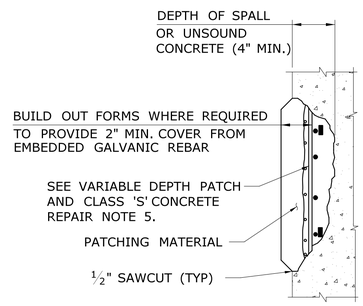

SECTION G / -

REFERENCES:

1. SEE DWG. NO. S-03 FOR SUBSTRUCTURE REPAIR NOTES.
2. SEE DWG. NO. S-06 FOR EMBEDDED GALVANIC ANODE DETAILS.

VARIABLE DEPTH PATCH AND CLASS 'S' CONCRETE REPAIR NOTES

1. ALL WORK SHOWN ON THIS DRAWING SHALL BE PERFORMED WHERE DIRECTED BY THE ENGINEER.
2. CLASS 'S' CONCRETE REPAIRS SHALL BE PAID UNDER ITEM "CLASS "S" CONCRETE." VARIABLE DEPTH PATCH REPAIRS SHALL BE PAID UNDER ITEM "VARIABLE DEPTH PATCH". SEE SPECIAL PROVISIONS.
3. SURFACE PREPARATION, PROPORTIONING AND MIXING OF MATERIALS, APPLICATION OF MATERIALS AND REPAIR PROCEDURES SHALL BE IN ACCORDANCE WITH THE MANUFACTURER'S RECOMMENDATIONS.
4. NEW CONCRETE PATCHES SHALL MATCH SHAPE OF EXISTING CONCRETE SURFACES. COLOR OF NEW PATCH CONCRETE SHALL MATCH COLOR OF THE ADJACENT SURFACES AS CLOSELY AS POSSIBLE.
5. EXPOSED REINFORCING BARS SHALL BE BLAST CLEANED AND COATED WITH AN APPROVED CEMENTITIOUS PRIMER (EXCEPT WHERE GALVANIC ANODES ARE UTILIZED), BEFORE APPLYING THE PATCHING MATERIAL. COST OF PRIMER SHALL BE INCLUDED IN THE COST OF THE PATCHING MATERIAL ITEM.
6. SPLICED REINFORCING BARS SHALL BE COATED WITH AN APPROVED CEMENTITIOUS PRIMER, BEFORE APPLYING PATCHING MATERIAL. COST OF PRIMER SHALL BE INCLUDED IN THE COST OF THE PATCHING MATERIAL.
7. THE REMOVAL OF DETERIORATED CONCRETE SHALL PROCEED AS DIRECTED BY THE ENGINEER. IF THE REMOVAL OF DETERIORATED CONCRETE BECOMES EXCESSIVE, THE REMOVAL WORK SHALL BE STOPPED AT THE LOCATION AND THE ENGINEER NOTIFIED IMMEDIATELY. COST OF REMOVAL OF DETERIORATED CONCRETE AND SURFACE PREPARATION OF THE REPAIR AREA SHALL BE INCLUDED IN THE APPROPRIATE PAY ITEM OF THE PATCHING MATERIAL.
8. THE CONTRACTOR SHALL NOT REMOVE CONCRETE EXCEPT IN THE PRESENCE OF THE ENGINEER OR HIS APPOINTED REPRESENTATIVE. IF THE AREA REMOVED EXCEEDS THE AREA SHOWN ON THE PLANS BY 25% OR IF THE REMOVAL DEPTH EXTENDS MORE THAN 1½" BEHIND THE MAIN REINFORCING BARS, THE CONTRACTOR SHALL CEASE REMOVAL OPERATIONS AND NOTIFY THE ENGINEER IMMEDIATELY. THE ENGINEER SHALL DETERMINE IF THE REMOVAL OPERATIONS REDUCE THE STRUCTURAL CAPACITY OF THE ELEMENT.
9. AREAS DISTURBED BY CONSTRUCTION SHALL BE RESTORED TO THEIR ORIGINAL CONDITION UNLESS OTHERWISE NOTED OR AS ORDERED BY ENGINEER.
10. REPAIR DETAILS APPLY TO SPALLED, SCALED, AND HOLLOW AREAS IN ABUTMENTS AND PIERS WHERE REQUIRED AND NOTED ON DRAWINGS, AND AS ORDERED BY ENGINEER.
11. VARIABLE DEPTH PATCH REPAIR TO BE USED FOR ALL UNREINFORCED CONCRETE REPAIR AREAS OR AREAS WHERE NO REINFORCING IS EXPOSED. VARIABLE DEPTH PATCH REPAIR SHALL USE CEMENTITIOUS MORTAR.
12. MECHANICAL COUPLER TO BE USED WHERE REQUIRED LAP LENGTH IS NOT AVAILABLE.

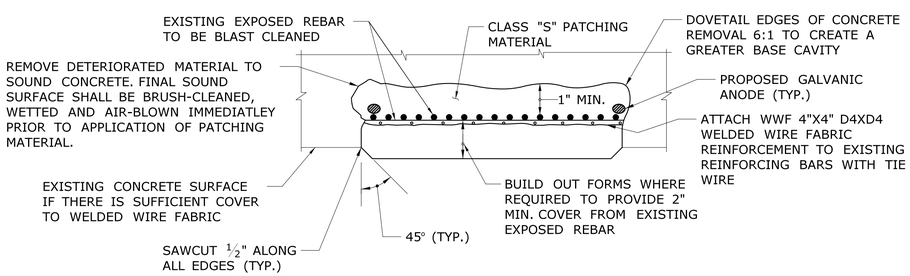

SECTION F / -

CLASS 'S' CONCRETE REPAIR DETAIL - WITH BUILD-OUT

N.T.S.

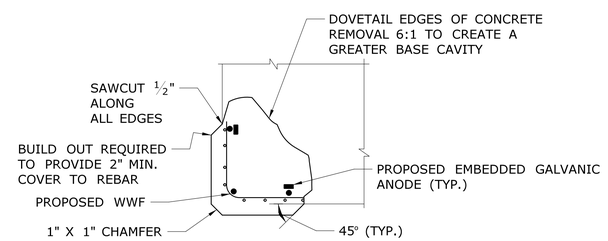

CORNER PATCH DETAIL

TYPICAL DETAIL APPLICABLE FOR COLUMN CORNERS, OVERHEAD CORNERS, AND TOP EDGE OF PIER CAPS. WORK WITH "SUBSTRUCTURE CONCRETE CLASS 'S' CONCRETE REPAIR PATCH" DETAILS AND PROCEDURE NOTES ON THIS SHEET.

REV.	DATE	REVISION DESCRIPTION	SHEET NO.

THE INFORMATION, INCLUDING ESTIMATED QUANTITIES OF WORK, SHOWN ON THESE SHEETS IS BASED ON LIMITED INVESTIGATIONS BY THE STATE AND IS IN NO WAY WARRANTED TO INDICATE THE CONDITIONS OF ACTUAL QUANTITIES OF WORK WHICH WILL BE REQUIRED.

Plotted Date: 8/8/2017

DESIGNER/DRAFTER: D.C./S.C.
CHECKED BY: J.H.M. II
SCALE AS NOTED

STATE OF CONNECTICUT
DEPARTMENT OF TRANSPORTATION

Filename: ...\SB_MSH_0_174_402_S_04_SUBRPR-2.dgn

SIGNATURE/BLOCK:
Close, Jensen and Miller, P.C.
1137 Silas Deane Highway
Wethersfield, CT 06109

PROJECT TITLE: BEAM END REPAIR AND BEARING REPLACEMENT IN DISTRICT 4

TOWN: VARIOUS

DRAWING TITLE: SUBSTRUCTURE REPAIR DETAILS - 2

PROJECT NO. 174-402
DRAWING NO. S-04
SHEET NO. 03.04

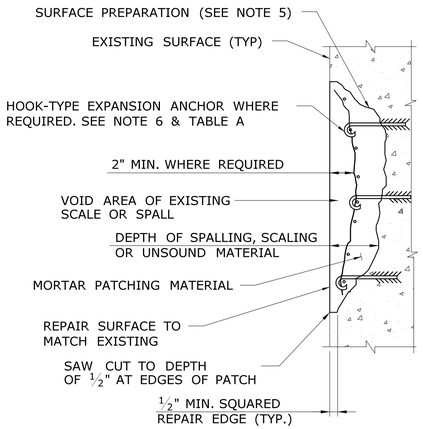

TABLE A	
SIZE AND SPACING OF HOOK-TYPE BOLTS	
THICKNESS OF PATCH MAT'L	SIZE AND SPACING
4" ±	1/2" DIA. AT 24" ± CTRS.
5" ±	1/2" DIA. AT 22" ± CTRS.
6" ±	1/2" DIA. AT 20" ± CTRS.

VARIABLE DEPTH REPAIR DETAIL

N.T.S.

VARIABLE DEPTH PATCH REPAIR PROCEDURE

1. SHALLOW REPAIR DETAIL APPLIES TO DETERIORATED AREAS WHERE LESS THAN HALF THE CIRCUMFERENCE OF THE EXISTING REINFORCING IS EXPOSED. THESE AREAS SHALL BE REPAIRED WITH VARIABLE DEPTH PATCH.
2. REPAIR DEPTH SHALL BE 3/8" (MIN.) OR GREATER. REPAIR DEPTHS LESS THAN 3/8" NEED NOT BE REPAIRED.
3. FOR AREAS WHERE THE CONCRETE REPAIR EXCEEDS 4" IN DEPTH, A SINGLE LAYER OF WIRE MESH SHALL BE USED TO REINFORCE EACH 2" THICKNESS OF PATCHING MATERIAL. THE COST OF WELDED WIRE FABRIC SHALL BE INCLUDED IN THE COST OF PATCHING MATERIAL.
4. THE PERIMETER OF EACH DETERIORATED AREA SHALL BE SQUARED-OFF BY SAW CUTTING.
5. SURFACE PREPARATION
   A. REMOVE LOOSE AND DETERIORATED CONCRETE, INCLUDING DIRT, OIL, GREASE AND ALL BOND-INHIBITING MATERIALS FROM SURFACE, LEAVING NO OFFSET OR ABRUPT CHANGES IN CONTOUR. SURFACE PREPARATION SHALL BE DONE BY SCABBLER, CHISELING, WIRE BRUSHING OR OTHER APPROPRIATE MECHANICAL MEANS.
   B. ROUGHEN CONTACT SURFACE WITH A MINIMUM PROFILE OF APPROXIMATELY 1/16" FOR BONDING WITH PATCHING MATERIAL.
   C. SATURATE WITH CLEAN WATER PRIOR TO APPLYING MORTAR. SUBSTRATE SHOULD BE SATURATED SURFACE DRY (SSD) WITH NO STANDING WATER DURING APPLICATION OF PATCHING MORTAR.
6. HOOK-TYPE EXPANSION ANCHOR BOLTS SHALL BE MECHANICALLY GALVANIZED IN ACCORDANCE WITH ASTM B695, CLASS 50, TYPE 1. COST OF HOOK-TYPE BOLTS, INCLUDING MATERIAL AND INSTALLATION, SHALL BE INCLUDED IN THE COST OF PATCHING MATERIAL.
7. NEW CONCRETE SHALL MATCH SHAPE AND COLOR OF EXISTING CONCRETE SURFACE AS CLOSELY AS POSSIBLE.

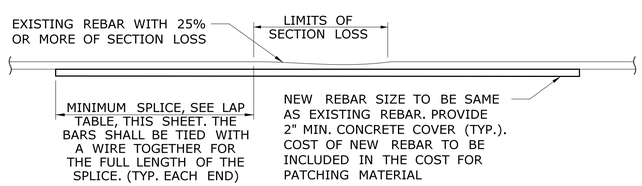

LAPPED TIED SPLICE BAR

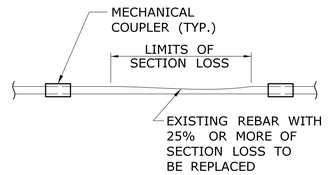

MECHANICAL SPLICE BAR

REINFORCEMENT SPLICE DETAIL

N.T.S.

REFERENCES:

1. SEE DWG. NO. S-03 FOR SUBSTRUCTURE REPAIR NOTES.
2. SEE DWG. NO. S-06 FOR EMBEDDED GALVANIC ANODE DETAILS.

REINFORCING BAR SPLICE LENGTH TABLE		
	BAR SIZE	LAP LENGTH
REINFORCEMENT SPACING @ ≥ 6" O.C.**	#4	1'-10"
	#5	2'-3"
	#6	2'-9"
	#7	3'-3"
	#8	3'-8"

**FOR BARS SPACED "LESS THAN" 6" O.C. MULTIPLY TABLE VALUES BY 1.25

NOTES

1. MECHANICAL SPLICERS ARE AN ACCEPTABLE ALTERNATE IF APPROVED BY THE ENGINEER.

REV.	DATE	REVISION DESCRIPTION	SHEET NO.

THE INFORMATION, INCLUDING ESTIMATED QUANTITIES OF WORK, SHOWN ON THESE SHEETS IS BASED ON LIMITED INVESTIGATIONS BY THE STATE AND IS IN NO WAY WARRANTED TO INDICATE THE CONDITIONS OF ACTUAL QUANTITIES OF WORK WHICH WILL BE REQUIRED.

Plotted Date: 8/8/2017

DESIGNER/DRAFTER: D.C./S.C.
CHECKED BY: J.H.M. II
SCALE AS NOTED

STATE OF CONNECTICUT
DEPARTMENT OF TRANSPORTATION

Filename: ...\SB..MSH..0..174..402..S..05..SUBRPR-3.dgn

SIGNATURE/BLOCK:
Close, Jensen and Miller, P.C.
1137 Silas Deane Highway
Wethersfield, CT 06109

PROJECT TITLE: BEAM END REPAIR AND BEARING REPLACEMENT IN DISTRICT 4

TOWN: VARIOUS

DRAWING TITLE: SUBSTRUCTURE REPAIR DETAILS - 3

PROJECT NO. 174-402
DRAWING NO. S-05
SHEET NO. 03.05

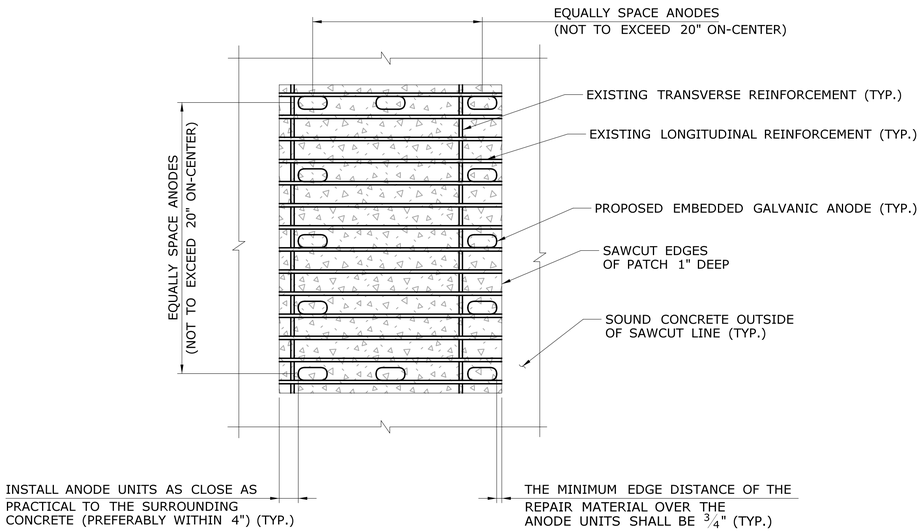

ANODE PLACEMENT - LARGE RECTANGULAR TYPE PATCH

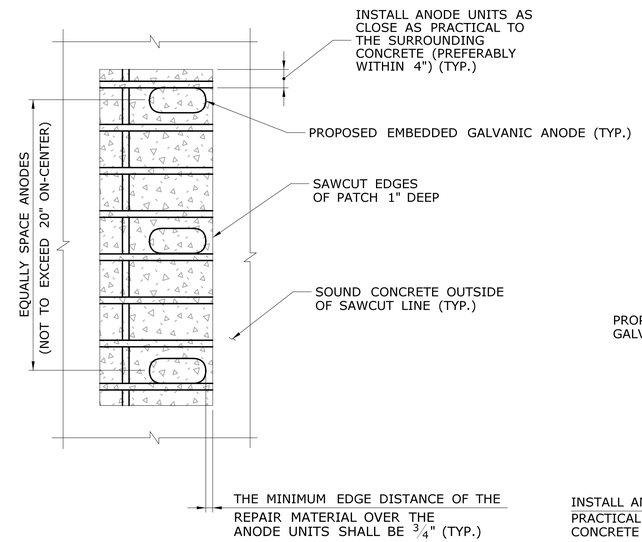

ANODE PLACEMENT - NARROW TYPE PATCH

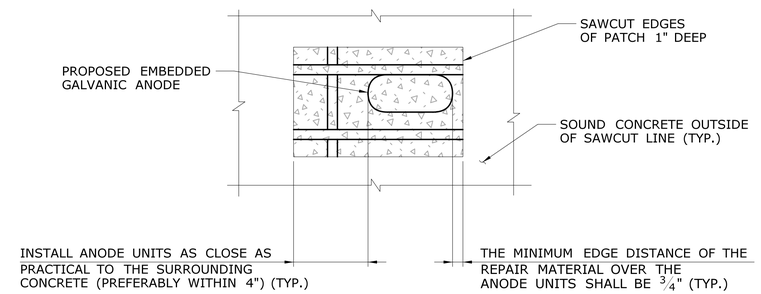

ANODE PLACEMENT - SMALL PATCH

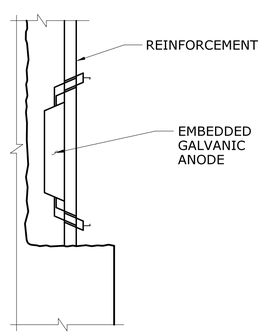

DETAIL - ANODES IN CONCRETE REPAIRS

NOT TO SCALE

INSTALLATION OF EMBEDDED GALVANIC ANODES

NOT TO SCALE

REFERENCES:

1. SEE DWG. NO. S-03 FOR SUBSTRUCTURE REPAIR NOTES
2. SEE DWG. NOS. S-04 AND S-05 FOR SUBSTRUCTURE REPAIR DETAILS.

EMBEDDED GALVANIC ANODE NOTES:

1. ANODES ARE TO BE INSTALLED FOR "CLASS 'S' CONCRETE" REPAIRS. THEIR PRIME PURPOSE IS TO PROTECT REINFORCING BARS THAT CROSS THE EDGES OF THE PATCH.
2. INSTALLATION OF ANODES SHALL BE AS DETAILED ON THIS PLAN AND PER THE RECOMMENDATIONS OF THE ANODE MANUFACTURER'S REPRESENTATIVE AND TO THE SATISFACTION OF THE ENGINEER.
3. THE EMBEDDED GALVANIC ANODES SHALL BE INSTALLED AFTER REINFORCING BARS HAVE BEEN CLEANED AND PRIOR TO APPLICATION OF PATCH MATERIAL. PATCHING MATERIAL SHALL NOT CONTAIN POZZOLANS.
4. FURNISHING AND INSTALLATION OF ANODES SHALL BE PAID FOR UNDER THE ITEM "EMBEDDED GALVANIC ANODES", SEE SPECIAL PROVISIONS.
5. PLACE ANODES SUCH THAT THEY HAVE 2" MIN. CONCRETE COVER.

REV.	DATE	REVISION DESCRIPTION	SHEET NO.

THE INFORMATION, INCLUDING ESTIMATED QUANTITIES OF WORK, SHOWN ON THESE SHEETS IS BASED ON LIMITED INVESTIGATIONS BY THE STATE AND IS IN NO WAY WARRANTED TO INDICATE THE CONDITIONS OF ACTUAL QUANTITIES OF WORK WHICH WILL BE REQUIRED.

Plotted Date: 8/8/2017

DESIGNER/DRAFTER: D.C./S.C.
CHECKED BY: J.H.M. II
SCALE AS NOTED

STATE OF CONNECTICUT
DEPARTMENT OF TRANSPORTATION

Filename: ...\SB_MSH_0_174_402_S_06_SUBRPR-4.dgn

SIGNATURE/BLOCK:
Close, Jensen and Miller, P.C.
1137 Silas Deane Highway
Wethersfield, CT 06109

PROJECT TITLE:
BEAM END REPAIR AND BEARING REPLACEMENT IN DISTRICT 4

TOWN: **VARIOUS**

DRAWING TITLE: **SUBSTRUCTURE REPAIR DETAILS - 4**

PROJECT NO. 174-402
DRAWING NO. S-06
SHEET NO. 03.06

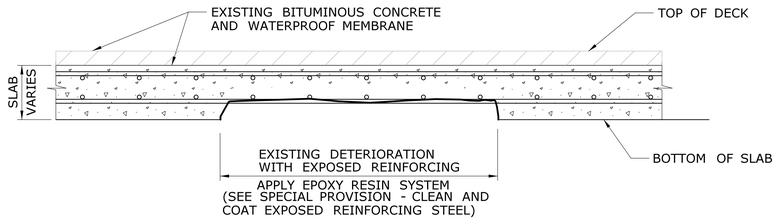

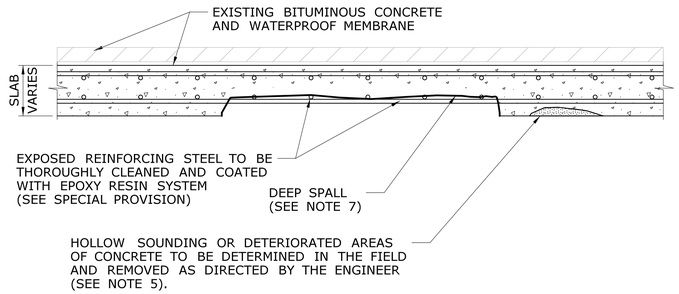

DECK UNDERSIDE REPAIRS

(CLEAN AND COAT EXPOSED REINFORCING STEEL)
N.T.S.

REFERENCES:

1. SEE DWG. NOS. S-30, S-31, AND S-46 FOR DECK REPAIR LOCATIONS.
2. SEE DWG. NO. S-07 FOR PARTIAL DEPTH PATCH.

DECK UNDERSIDE REPAIR PROCEDURE

1. REMOVE DETERIORATED S.I.P. FORMS BY MECHANICAL MEANS.
2. IF CONCRETE THAT WAS PREVIOUSLY COVERED BY S.I.P. IS DETERIORATED, THEN REMOVE THE CONCRETE TO SOUND CONCRETE TO THE LIMITS SHOWN ON THE PLANS OR AS DIRECTED BY THE ENGINEER.
3. IF THE CONCRETE DECK IS NOT COVERED BY S.I.P. FORM, THEN REMOVE DETERIORATED CONCRETE TO SOUND CONCRETE TO THE LIMITS SHOWN ON THE PLANS OR AS DIRECTED BY THE ENGINEER.
4. PRESERVE EXPOSED REINFORCING STEEL, IF ANY.
5. CLEAN THE SOUND CONCRETE SURFACE AREA AND EXPOSED REINFORCING STEEL OF ALL LOOSE OR POWDER-LIKE RUST, OIL, DUST, DIRT, LOOSE PARTICLES, AND OTHER BOND INHIBITING MATTER BY AN APPROVED METHOD.
6. COAT THE EXPOSED REINFORCING STEEL WITH EPOXY RESIN.
7. AT LOCATIONS WHERE SPALLS OR DELAMINATED CONCRETE ON THE UNDERSIDE OF THE DECK ARE DEEPER THAN HALF THE SLAB THICKNESS, REMOVE THE SLAB CONCRETE FULL DEPTH, AND REPAIR AS "FULL DEPTH PATCH (HIGH EARLY STRENGTH CONCRETE)". IF LESS THAN 50% OF THE DIAMETER OF ANY REINFORCEMENT BAR IS EXPOSED OR IF THE BAR HAS LESS THAN 1 FOOT IN LENGTH WITH MORE THAN 50% OF ITS DIAMETER EXPOSED, THE TYPICAL TREATMENT IS TO CLEAN AND COAT THE BAR. IF ANY BAR IS EXPOSED MORE THAN THOSE PARAMETERS, THEN PROPER TREATMENT IS "FULL DEPTH PATCH (HIGH EARLY STRENGTH CONCRETE)".

DECK UNDERSIDE REPAIR NOTES

1. EPOXY COATING THE DECK UNDERSIDE REINFORCEMENT SHALL BE PERFORMED IN ACCORDANCE WITH DETAILS SHOWN ON THIS SHEET AND THE SPECIAL PROVISIONS. THIS WORK SHALL BE PAID UNDER THE ITEM "CLEAN AND COAT EXPOSED REINFORCING STEEL" (SEE SPECIAL PROVISIONS).
2. ALL WORK SHALL BE CONTAINED BY A TEMPORARY DEBRIS SHIELD IN ACCORDANCE WITH THE PERMIT REQUIREMENTS CONTAINED ELSEWHERE IN THE CONTRACT DOCUMENTS. THE COST OF THIS SHALL BE INCLUDED IN THE GENERAL COST OF CONSTRUCTION.
3. THE EXISTING SLAB UNDERSIDE SHALL BE SOUNDED FOR HOLLOW AREAS OF CONCRETE TO THE SATISFACTION OF THE ENGINEER. THE CONTRACTOR SHALL PROVIDE SAFE ACCESS TO THE ENGINEER FOR DELINEATION AND INSPECTION OF THE DECK UNDERSIDE, AND THE REPAIR WORK. THE COST OF PROVIDING ACCESS FOR THE INSPECTION SHALL BE INCLUDED IN THE COST OF THE ITEM "CLEAN AND COAT EXPOSED REINFORCING STEEL" (SEE SPECIAL PROVISIONS).
4. ALL EXPOSED REINFORCING STEEL SHALL BE THOROUGHLY CLEANED TO REMOVE ANY DEBRIS OR RESIDUE BEFORE APPLYING THE EPOXY RESIN COATING (SEE SPECIAL PROVISION).
5. ANY EXPOSED REINFORCING STEEL IN THE AREAS OF POP-OUTS CAUSED BY THE REMOVAL OF DETERIORATED CONCRETE SHALL BE CLEANED AND COATED WITH EPOXY RESIN COATING.
6. THE CONTRACTOR SHALL NOT PERFORM ANY REPAIR WORK WITHOUT PRIOR APPROVAL FROM THE ENGINEER. THE REMOVAL OF DETERIORATED CONCRETE SHALL PROCEED AS DIRECTED BY THE ENGINEER.

FULL DEPTH PATCH REPAIR NOTES

1. FULL DEPTH PATCH REPAIRS SHALL BE PERFORMED IN ACCORDANCE WITH DETAIL SHOWN AND SHALL BE PAID UNDER THE ITEM "FULL DEPTH PATCH (HIGH EARLY STRENGTH CONCRETE)" SEE SPECIAL PROVISIONS. ENGINEER TO DELINEATE LIMITS OF DETERIORATION.
2. COST OF $\frac{1}{2}$" DEEP SAWCUT SHALL BE INCLUDED IN THE CONTRACT BID PRICE FOR ITEM "FULL DEPTH PATCH (HIGH EARLY STRENGTH CONCRETE)."
3. ALL BROKEN AND DAMAGED REINFORCING STEEL BARS SHALL BE REPLACED. MINIMUM LENGTH OF SPLICE SHALL BE 40 BAR DIAMETER. MECHANICAL SPLICES MAY BE USED IF AUTHORIZED BY THE ENGINEER.
4. NEW REINFORCING STEEL SHALL BE EPOXY COATED ASTM A615 GRADE 60. FURNISHING AND INSTALLING REINFORCING BARS SHALL BE PAID UNDER THE ITEM "FULL DEPTH PATCH (HIGH EARLY STRENGTH CONCRETE)."
5. COST OF ADDITIONAL CONCRETE REMOVAL REQUIRED FOR THE REPAIR OF THE REINFORCING STEEL SHALL BE PAID UNDER THE ITEM "FULL DEPTH PATCH (HIGH EARLY STRENGTH CONCRETE)."
6. THE CONTRACTOR SHALL PROVIDE NECESSARY SHIELDING TO PREVENT ANY DEBRIS FROM FALLING DURING FULL DEPTH PATCH REPAIR. THE COST OF SHIELDING SHALL BE INCLUDED IN THE COST OF THE ITEM "FULL DEPTH PATCH (HIGH EARLY STRENGTH CONCRETE)."
7. STAY-IN-PLACE FORMS AND DECK UNDERSIDE DETERIORATION AND REPAIR ESTIMATES ARE BASED ON LIMITED FIELD OBSERVATIONS AND BRIDGE SAFETY INSPECTION REPORTS. THE EXACT LOCATION AND LIMITS OF EXPOSED REINFORCEMENT AND HOLLOW AREAS OF CONCRETE IN THE DECK UNDERSIDE SHALL BE DETERMINED BY THE ENGINEER DURING CONSTRUCTION.

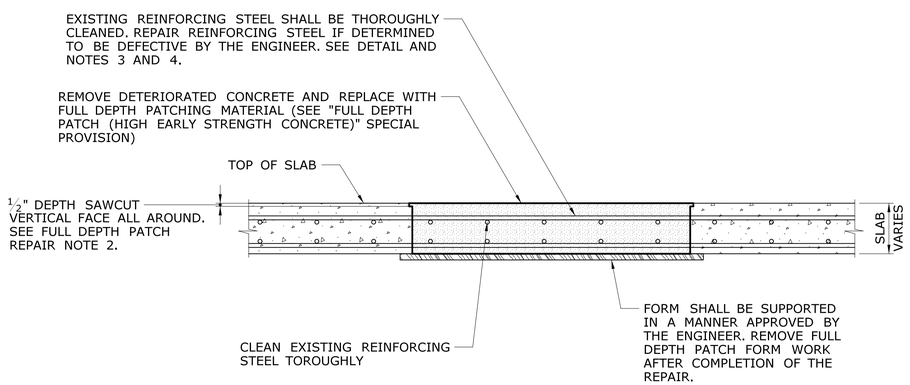

FULL DEPTH PATCH REPAIR DETAIL

N.T.S.

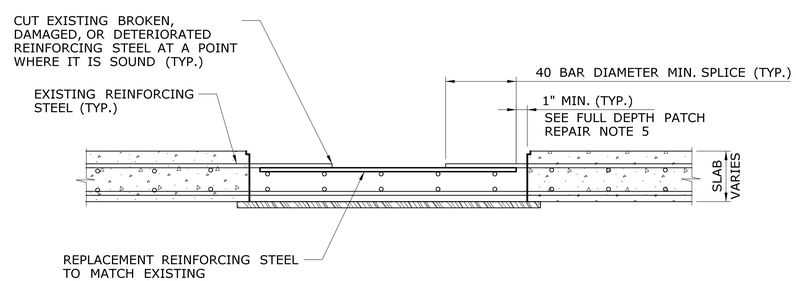

DEFECTIVE REINFORCING STEEL REPAIR DETAIL FOR FULL DEPTH PATCH

N.T.S.

NOTE

INSTALL PROTECTIVE SHIELDING UNDER SPANS OVER ROADWAYS, SIDEWALKS, PARKING LOTS, AND WATERWAYS TO PROTECT FROM POSSIBLE FALLING OF DEBRIS. THE COST OF WHICH SHALL BE INCLUDED IN THE CONCRETE REPAIR ITEMS.

REV.	DATE	REVISION DESCRIPTION	SHEET NO.

THE INFORMATION, INCLUDING ESTIMATED QUANTITIES OF WORK, SHOWN ON THESE SHEETS IS BASED ON LIMITED INVESTIGATIONS BY THE STATE AND IS IN NO WAY WARRANTED TO INDICATE THE CONDITIONS OF ACTUAL QUANTITIES OF WORK WHICH WILL BE REQUIRED.

Plotted Date: 8/8/2017

DESIGNER/DRAFTER: D.C./S.C.
CHECKED BY: J.H.M. II
SCALE AS NOTED

STATE OF CONNECTICUT
DEPARTMENT OF TRANSPORTATION

Filename: ...\SB_MSH_0_174_402_S_07_DECK-REPAIR-1.dgn

SIGNATURE/BLOCK:
Close, Jensen and Miller, P.C.
1137 Silas Deane Highway
Wethersfield, CT 06109

PROJECT TITLE: BEAM END REPAIR AND BEARING REPLACEMENT IN DISTRICT 4

TOWN: VARIOUS

DRAWING TITLE: DECK REHABILITATION PATCH DETAILS - 1

PROJECT NO. 174-402
DRAWING NO. S-07
SHEET NO. 03.07

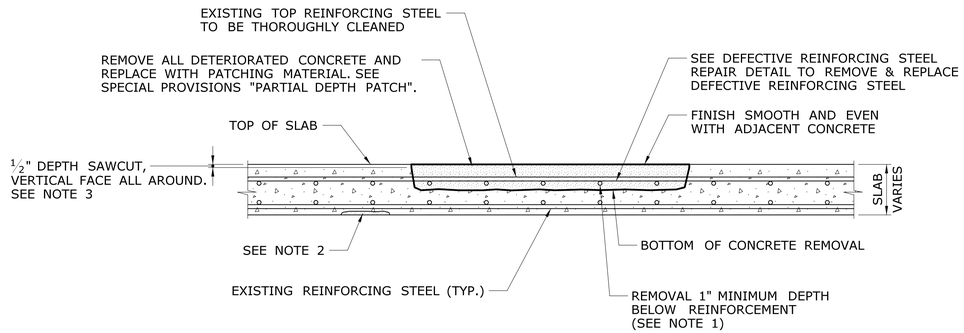

PARTIAL DEPTH PATCH REPAIR DETAIL

N.T.S.

PARTIAL DEPTH PATCH REPAIR NOTES

1. IF, AFTER CONCRETE REMOVAL, THE REINFORCING STEEL HAS AT LEAST ONE HALF OF ITS SURFACE AREA EXPOSED, THE CONCRETE SHALL BE FURTHER REMOVED TO A DEPTH OF 1" BELOW THE STEEL. THE EXPOSED REINFORCING STEEL SHALL BE THOROUGHLY CLEANED TO REMOVE ANY DEBRIS OR RESIDUE BEFORE PLACING "PARTIAL DEPTH PATCHING" MATERIAL.
2. EXPOSED REINFORCING STEEL IN THE AREAS OF POP-OUTS CAUSED BY THE REMOVAL OF DETERIORATED CONCRETE SHALL BE CLEANED & THE ENTIRE SURFACE OF THE REINFORCING SHALL BE COATED WITH AN EPOXY COATING.
3. COST OF ½" DEEP SAWCUT SHALL BE INCLUDED IN THE CONTRACT BID PRICE FOR ITEM "PARTIAL DEPTH PATCH".
4. PARTIAL DEPTH PATCH REPAIRS SHALL BE PERFORMED IN ACCORDANCE WITH DETAILS SHOWN ON THIS SHEET AND SHALL BE PAID UNDER THE ITEM "PARTIAL DEPTH PATCH" (SEE SPECIAL PROVISIONS).
5. IN AREAS WHERE REINFORCING STEEL IS ONLY PARTIALLY EXPOSED AFTER REMOVAL OF DETERIORATED CONCRETE, THE REINFORCEMENT SHALL BE COATED WITH EPOXY RESIN COMPOUND (SEE SPECIAL PROVISIONS) BEFORE PLACING "PARTIAL DEPTH PATCH" MATERIAL.
6. IF REMOVAL OF DETERIORATED CONCRETE FOR "PARTIAL DEPTH PATCH" EXCEEDS TWO-THIRDS OF THE TOTAL THICKNESS OF THE SLAB, REMOVE THE REMAINDER OF THE CONCRETE TO THE BOTTOM OF THE SLAB AND PERFORM "FULL DEPTH PATCH". FINAL PAYMENT SHALL BE MADE AS "FULL DEPTH PATCH (HIGH EARLY STRENGTH CONCRETE)" ONLY (SEE SPECIAL PROVISIONS).
7. DECK PATCHING WORK ON THE TOP SURFACE SHALL BE PERFORMED IN ACCORDANCE WITH THE SPECIAL PROVISIONS "MAINTENANCE AND PROTECTION OF TRAFFIC" AND "PROSECUTION AND PROGRESS".

NOTE:
FINAL PAVING SHALL NOT BE PERFORMED UNTIL DECK REPAIRS HAVE BEEN COMPLETED (TOP AND BOTTOM SURFACE) WITHIN A SINGLE STAGE. SEE HIGHWAY SUBSET FOR STAGE CONSTRUCTION.

DEFECTIVE REINFORCING STEEL REPAIR NOTES

1. COST OF ADDITIONAL CONCRETE REMOVAL REQUIRED FOR THE REPAIR OF THE REINFORCING STEEL SHALL BE PAID UNDER THE ITEM "PARTIAL DEPTH PATCH".
2. NEW REINFORCING STEEL SHALL BE EPOXY COATED ASTM A615 GRADE 60. FURNISHING AND INSTALLING REINFORCING BARS SHALL BE PAID UNDER THE ITEM "DEFORMED STEEL BARS - EPOXY COATED".

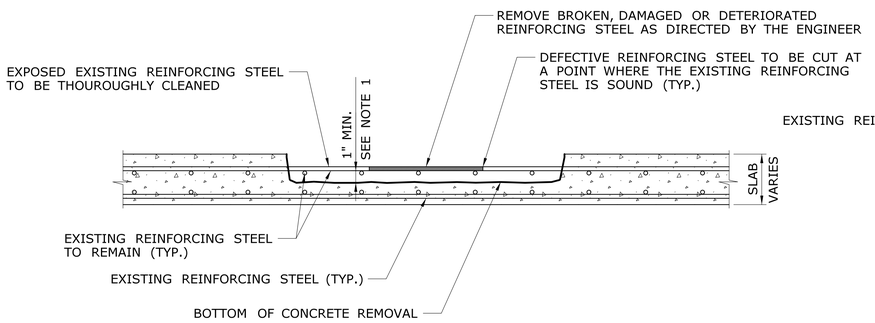

REMOVAL OF DEFECTIVE REINFORCING STEEL

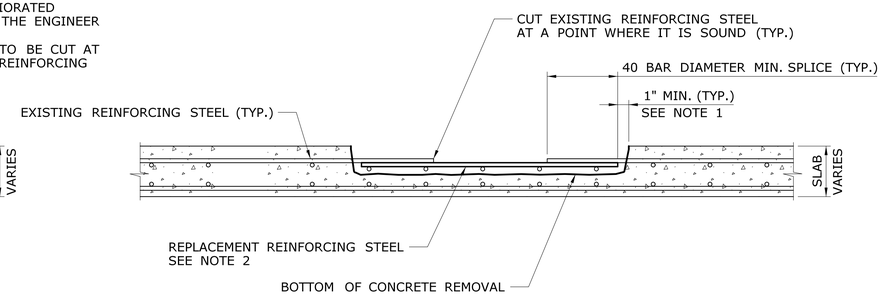

REPAIR OF DEFECTIVE REINFORCING STEEL

REFERENCES:

1. SEE DWG. NOS. S-30, S-31, AND S-46 FOR DECK REPAIR LOCATIONS.
2. SEE DWG. NO. S-06 FOR FULL DEPTH PATCH.

DEFECTIVE REINFORCING STEEL REPAIR DETAIL FOR PARTIAL DEPTH PATCH

N.T.S.

REV.	DATE	REVISION DESCRIPTION	SHEET NO.

THE INFORMATION, INCLUDING ESTIMATED QUANTITIES OF WORK, SHOWN ON THESE SHEETS IS BASED ON LIMITED INVESTIGATIONS BY THE STATE AND IS IN NO WAY WARRANTED TO INDICATE THE CONDITIONS OF ACTUAL QUANTITIES OF WORK WHICH WILL BE REQUIRED.

Plotted Date: 8/8/2017

DESIGNER/DRAFTER: D.C./S.C.
CHECKED BY: J.H.M. II
SCALE AS NOTED

STATE OF CONNECTICUT
DEPARTMENT OF TRANSPORTATION

Filename: ...\SB_MSH_0_174_402_S_08_DECK-REPAIR-2.dgn

SIGNATURE/BLOCK:
STATE OF CONNECTICUT JOHN H. MILLER JR. NO. 4142 LICENSED PROFESSIONAL ENGINEER
Close, Jensen and Miller, P.C.
1137 Silas Deane Highway
Wethersfield, CT 06109

PROJECT TITLE: BEAM END REPAIR AND BEARING REPLACEMENT IN DISTRICT 4

TOWN: VARIOUS

DRAWING TITLE: DECK REHABILITATION PATCH DETAILS - 2

PROJECT NO. 174-402
DRAWING NO. S-08
SHEET NO. 03.08

ASPHALTIC PLUG EXPANSION JOINT SYSTEM NOTES:

1. A BRIDGING PLATE SHALL BE USED TO SPAN THE GAP BETWEEN TWO DECK ENDS OR THE JOINT BETWEEN A DECK END AND A CONCRETE APPROACH SLAB.
2. DISCONTINUE THE INSTALLATION OF THE PREFORMED JOINT SEAL AND BRIDGING PLATE WHERE THE APPROACH SLAB IS DISCONTINUED (TYPICALLY IN THE ROADWAY SHOULDERS). SEE "ASPHALTIC PLUG EXPANSION JOINT SYSTEM" SPECIAL PROVISION.
3. NEW STEEL BRIDGING PLATES SHALL HAVE A MINIMUM THICKNESS OF $\frac{1}{4}$". FOR JOINT OPENINGS THAT EXCEED 3", A $\frac{3}{8}$" THICK BY 12" WIDE PLATE WILL BE REQUIRED.
4. NO BRIDGING PLATE SHALL BE USED AT THE FOLLOWING LOCATIONS:
   A. JOINT BETWEEN A DECK END AND A CONCRETE APPROACH PAVEMENT
   B. WHERE A BRIDGE DECK END MEETS A BITUMINOUS APPROACH PAVEMENT
5. SAWCUTS MADE 3' EACH SIDE OF CENTERLINE OF JOINT WILL BE PAID AS "CUT BITUMINOUS CONCRETE PAVEMENT".
6. THE REMOVAL OF ALL EXISTING JOINT SYSTEMS, HMA WEARING SURFACE, AND BITUMINOUS CONCRETE, MEMBRANE WATERPROOFING AND BOND BREAKER WITHIN THE LIMITS SHOWN TO BE INCLUDED FOR PAYMENT UNDER THE ITEM "REMOVAL OF EXISTING WEARING SURFACE".
7. INSTALLATION OF MEMBRANE WITHIN THE LIMITS SHOWN TO BE PAID UNDER THE ITEM, "MEMBRANE WATERPROOFING (WOVEN GLASS FABRIC)".
8. TACK COAT PLACED ALONG VERTICAL FACES AND ON TOP OF THE WEARING SURFACE AT THE SAWCUT TO BE PAID UNDER THE ITEM, "MATERIAL FOR TACK COAT".
9. THE FURNISHING AND PLACING OF PMA S0.375 TO BE INCLUDED FOR PAYMENT UNDER THE ITEM "PMA S0.375". THE FURNISHING AND PLACING OF HMA S0.375 TO BE INCLUDED FOR PAYMENT UNDER THE ITEM "HMA S0.375". THE FURNISHING AND PLACING OF HMA S0.25 TO BE INCLUDED FOR PAYMENT UNDER THE ITEM "HMA S0.25".
10. THE CONTRACTOR IS RESPONSIBLE FOR MEASURING THE JOINT GAP WIDTHS IN BOTH, THE BRIDGE DECKS AND THE PARAPETS IN ACCORDANCE WITH THE "PREFORMED JOINT SEAL" SPECIFICATIONS.
11. SAW-CUTTING AND REMOVAL OF PAVEMENT FOR JOINT INSTALLATION TO BE INCLUDED FOR PAYMENT UNDER THE ITEM, "ASPHALTIC PLUG EXPANSION JOINT SYSTEM".
12. ASPHALTIC PLUG EXPANSION JOINT SYSTEMS MAY BE INSTALLED ONLY WITHIN THE TEMPERATURE RANGE SPECIFIED IN THE SPECIAL PROVISION "ASPHALTIC PLUG EXPANSION JOINT SYSTEM". REFERENCE THE RANGE OF THERMAL MOVEMENT FOR THE SELECTED JOINT PRODUCT IN THE TABLE FOR "ALLOWABLE BRIDGE SUPERSTRUCTURE SURFACE TEMPERATURE RANGE" IN THE SPECIAL PROVISION.
13. ASPHALTIC PLUG JOINTS SHALL BE REPLACED FROM GUTTER LINE TO GUTTER LINE.
14. UNSOUND CONCRETE, IF ANY, AS DETERMINED BY ENGINEER IN BRIDGE DECK NEEDED TO BE REMOVED AND REPAIRED WILL BE INCLUDED FOR PAYMENT UNDER ITEM "PARTIAL DEPTH PATCH".
15. EXPLORATION OF PAVEMENT THICKNESS AND JOINT LOCATION TO BE INCLUDED IN THE GENERAL COST OF THE ITEM "REMOVAL OF EXISTING WEARING SURFACE".
16. THE REMOVAL OF JOINT SYSTEMS WHICH INVOLVES RECONSTRUCTION OF DECK ENDS WITHIN THE LIMITS SHOWN WILL BE PAID UNDER THE ITEM "RECONSTRUCT CONCRETE DECK ENDS", EXCEPT IF NOTED OTHERWISE.
17. THE CONTRACTOR SHALL SUBMIT TO THE ENGINEER, A LETTER FROM THE MANUFACTURER OF THE JOINT STATING THAT THE JOINT IS APPROPRIATE FOR USE AT EACH JOINT LOCATION AND WILL FUNCTION ADEQUATELY GIVEN THE MAXIMUM AND MINIMUM JOINT WIDTHS SPECIFIED BY THE MANUFACTURER, MAXIMUM SKEW ANGLE AND MOVEMENT RANGE AT EACH JOINT LOCATION.

REFERENCES:

1. SEE DWG. NOS. S-10 TO S-15 FOR ASPHALTIC PLUG EXPANSION JOINT SYSTEM DETAILS.
2. SEE DWG. NOS. S-34, S-49, AND S-52 FOR ASPHALTIC PLUG EXPANSION JOINT SYSTEM LOCATIONS.

TABLE A

LIFT THICKNESS (IN.)	NUMBER OF PASSES
$1\frac{1}{4}$ TO $1\frac{1}{2}$	8
GREATER THAN $1\frac{1}{2}$ TO 2	10
GREATER THAN 2 TO $2\frac{1}{2}$	12

BITUMINOUS CONCRETE PLACEMENT REQUIREMENTS FOR BRIDGE DECK JOINTS:

1. ALL THE REQUIREMENTS OF SPECIAL PROVISION SECTION 4.06 IN THE CONTRACT SHALL BE MET EXCEPT AS DESCRIBED BELOW, FOR AREAS ADJACENT TO REPAIRED JOINTS.
2. FOR BRIDGES WHERE EXISTING BITUMINOUS CONCRETE OVERLAY AND MEMBRANE WATERPROOFING IS REPLACED IN ITS ENTIRETY, SEE "GENERAL NOTES" ON DWG. NO. G-05.
3. THE FIRST COURSE OF BITUMINOUS CONCRETE MATERIAL SHALL BE PLACED ON THE MEMBRANE AT A COMPACTED THICKNESS OF EXACTLY $1\frac{1}{4}$ INCHES UNIFORMLY. IF LIFTS OF VARYING THICKNESS ARE REQUIRED, THEY SHALL BE CONTAINED IN THE INTERMEDIATE LIFTS. THE FINAL LIFT SHALL BE OF UNIFORM THICKNESS. IN LIEU OF DENSITY TESTING, THE METHODS DESCRIBED BELOW SHALL BE FOLLOWED TO ASSURE PROPER COMPACTION.
4. BITUMINOUS CONCRETE MATERIAL SHALL BE PLACED AND SPREAD IN THE PREPARED AREA WITH COMPACTION COMMENCING PRIOR TO THE MATERIAL COOLING TO A TEMPERATURE OF 260° F. WHEN ANY BITUMINOUS CONCRETE MATERIAL IS NOT ABLE TO BE PLACED BEFORE REACHING THE MINIMUM DELIVERY TEMPERATURE OF 260° F, IT SHALL BE PROPERLY DISCARDED BY THE CONTRACTOR AT NO COST TO THE STATE.
5. THE BITUMINOUS CONCRETE MATERIAL SHALL BE COMPACTED IN ALL AREAS BY RECEIVING THE MINIMUM NUMBER OF PASSES REQUIRED IN 'TABLE A' BEFORE IT COOLS TO A TEMPERATURE OF 180° F. ALL COMPACTION (COMPLETING THE MINIMUM NUMBER OF SPECIFIED PASSES) SHALL BE COMPLETED BEFORE THE BITUMINOUS CONCRETE COOLS TO A TEMPERATURE OF 180° F.
6. ALL INTERMEDIATE (NON-SURFACE) LIFTS SHALL BE COMPACTED WITH AN ASPHALT VIBRATORY PLATE COMPACTOR.
   a. THE VIBRATORY PLATE COMPACTOR SHALL MEET THE FOLLOWING REQUIREMENTS:
      i. IT SHALL BE DESIGNED TO COMPACT BITUMINOUS CONCRETE.
      ii. IT SHALL BE EQUIPPED WITH A WATER TANK.
      iii. IT SHALL GENERATE A CENTRIFUGAL FORCE OF AT LEAST 3200 POUNDS BUT NO GREATER THAN 6000 POUNDS.
      iv. IT SHALL HAVE AN OPERATING WEIGHT (WITHOUT WATER) OF AT LEAST 160 POUNDS.
      v. IT SHALL GENERATE A MINIMUM OF 4400 VIBRATIONS PER MINUTE.
      vi. ANY CORNERS OR OTHER AREAS THAT CANNOT BE REACHED BY THE VIBRATORY PLATE COMPACTOR SHALL BE COMPACTED WITH A HAND TAMPER (APPROVED FOR USE BY THE ENGINEER) A MINIMUM OF 20 TIMES (FOR ANY GIVEN AREA) BEFORE THE MATERIAL TEMPERATURE DROPS TO 180° F.
7. THE FINAL (SURFACE) LIFT SHALL BE COMPACTED WITH A DOUBLE DRUM ROLLER.
   a. THE DOUBLE DRUM ROLLER SHALL MEET THE FOLLOWING REQUIREMENTS:
      i. IT SHALL BE DESIGNED TO COMPACT BITUMINOUS CONCRETE.
      ii. IT SHALL WEIGH $3\frac{1}{2}$ TO $4\frac{1}{2}$ TONS.
8. THE CONTRACTOR MAY REQUEST TO USE ALTERNATE EQUIPMENT BY SUBMITTING A SUPPLEMENT TO THEIR QC PLAN DESCRIBING THE EQUIPMENT'S SPECIFICATIONS AND PLACEMENT PROCEDURES. THE EQUIPMENT AND PROCEDURES MUST BE APPROVED BY THE ENGINEER PRIOR TO THEIR USE.
9. IF THE ABOVE METHODS ARE NOT COMPLETED TO THE SATISFACTION OF THE ENGINEER, HE/SHE MAY REQUIRE THE DENSITY OF ANY LIFT OF $1\frac{1}{2}$ INCHES OR GREATER BE VERIFIED BY USE OF A QUALITY CONTROL NUCLEAR DENSITY GAUGE SUPPLIED BY THE CONTRACTOR. IF DENSITY VERIFICATION IS REQUIRED BY THE ENGINEER, THE VALUES MUST CONFORM TO THE REQUIREMENTS OF SPECIAL PROVISION SECTION 4.06 IN THE CONTRACT.

ASPHALTIC PLUG EXPANSION JOINT

	BR. 00468	BR. 01154	BR. 01161
ABUTMENT NO. 1			
EFFECTIVE SPAN LENGTH (FT)	67.62	60.97	69.00
THERMAL MOVEMENT RANGE (IN)	0.62	0.56	0.64
BEARING	EXP.	EXP.	EXP.
PIER 1			
EFFECTIVE SPAN LENGTH (FT)	-	103.88	107.00
THERMAL MOVEMENT RANGE (IN)	-	0.96	0.99
BEARING	FIXED	EXP.	EXP.
PIER 2			
EFFECTIVE SPAN LENGTH (FT)	-	-	107.00
THERMAL MOVEMENT RANGE (IN)	-	-	.99
BEARING	-	FIXED	EXP.
PIER 3			
EFFECTIVE SPAN LENGTH (FT)	-	116.23	32.00
THERMAL MOVEMENT RANGE (IN)	-	1.07	0.30
BEARING	-	EXP.	EXP.
ABUTMENT NO. 2			
EFFECTIVE SPAN LENGTH (FT)	67.00	31.89	-
THERMAL MOVEMENT RANGE (IN)	0.62	0.30	-
BEARING	EXP.	EXP.	FIXED

COMMON JOINT REPLACEMENT NOTES:

1. SEE INDIVIDUAL JOINT DETAILS FOR ANY ADDITIONAL NOTES SPECIFIC TO INDIVIDUAL JOINTS.
2. ANY UTILITIES BELOW THE DECK AND CONDUITS IN PARAPETS SHALL BE PROTECTED.
3. ALL SCUPPERS ADJACENT TO JOINTS SHALL BE PROTECTED.
4. JOINTS WILL NEED TO BE CONSTRUCTED IN STAGES, IF SPECIFIED. JOINT SPLICING DETAILS SHALL FOLLOW MANUFACTURER RECOMMENDATIONS.
5. TRANSVERSE REINFORCEMENT SHALL BE MADE CONTINUOUS USING DOWEL BAR SPLICERS OR ADEQUATE LAP SPLICES OF REINFORCEMENT.
6. IF AN ADEQUATE LAP SPLICE CANNOT BE DEVELOPED, CONCRETE SHALL BE REMOVED AS NECESSARY AT THE DIRECTION OF THE ENGINEER TO DEVELOP AN ADEQUATE LAP SPLICE. THE COST OF WORK SHALL BE PAID FOR UNDER THE ITEM, "RECONSTRUCT CONCRETE DECK ENDS" OR RECONSTRUCT CONCRETE DECK AND BACKWALL".
7. LONG-DURATION STAGED CONSTRUCTION IS NOT ALLOWED. CONTRACTOR SHALL SUBMIT DESIGN DETAILS AND CALCULATIONS FOR A TEMPORARY REMOVABLE STEEL BRIDGING PLATE TO FACILITATE RECONSTRUCTION OF DECK ENDS AND INSTALLATION OF JOINTS DURING OFF-PEAK HOURS AND ALLOW TRAFFIC TO UTILIZE THE ROADWAY DURING PEAK HOURS.
8. THE CONTRACTOR SHALL UNDERTAKE A SURVEY OF THE JOINT PRIOR TO START OF ANY WORK AND INFORM THE ENGINEER IMMEDIATELY IF CONDITIONS DO NOT REFLECT WHAT IS SHOWN ON THE PLANS. AS PART OF THIS SURVEY, THE CONTRACTOR IS ALSO REQUIRED TO DEVELOP A CROSS-SECTION AT THE JOINT IN ORDER TO CORRECTLY FABRICATE ANY EXTRUSIONS OR PREFABRICATED COMPONENTS ETC. THAT MAY BE REQUIRED. THE COST TO DO THE SURVEY IS INCLUDED IN THE "PREFORMED JOINT SEAL".
9. ANY DETERIORATED CONCRETE ON THE BRIDGE DECK/APPROACH SLABS SHALL BE REPAIRED UNDER THE ITEM "PARTIAL DEPTH PATCH" EXCEPT AREAS OF "RECONSTRUCTED CONCRETE DECK ENDS" OR "RECONSTRUCT CONCRETE DECK AND BACKWALL" AS DIRECTED BY THE ENGINEER.
10. ANY MODIFICATIONS TO ABUTMENT BACKWALLS SHALL BE REPAIRED UNDER THE ITEM "RECONSTRUCT CONCRETE DECK ENDS" OR "RECONSTRUCT CONCRETE DECK AND BACKWALL" AS DIRECTED BY THE ENGINEER.

SUGGESTED SEQUENCE OF WORK

STEP 1 CONTRACTOR SHALL PERFORM AN EXPLORATION AT THE GUTTER LINE (AT THE FOUR CORNERS OF EACH SPAN) AND THE CROWN (AT THE BEGINNING AND END OF THE BRIDGE). A MINIMUM OF SIX REPRESENTATIVE DEPTH MEASUREMENTS AT THESE LOCATIONS TO DETERMINE THE DEPTH OF PAVEMENT AND THE LOCATIONS OF THE DECK ENDS (CENTERLINE OF PROPOSED JOINT) BEFORE PROCEEDING TO STEP 2. ADDITIONAL MEASUREMENTS SHALL BE TAKEN IF NEEDED IN ACCORDANCE TO SPECIAL PROVISIONS OF "REMOVAL OF EXISTING WEARING SURFACE". THE CONTRACTOR SHALL ALSO MEASURE THE DECK JOINT GAP OPENING FOR SIZING THE PREFORMED JOINT SEAL. ORDERING OF THE PREFORMED JOINT SEAL REQUIRES A MINIMUM OF THREE WEEKS.

STEP 2 THE CONTRACTOR IS RESPONSIBLE FOR FILLING OUT THE APPLICATBLE PREFORMED JOINT SEAL CHECKLIST FOR EACH JOINT LOCATION. THE CHECKLIST SHALL BE FORWARDED TO THE MANUFACTURE AND BRIDGE DESIGN FOR REVIEW.

STEP 3 MILL ROADWAY AND BRIDGE PAVEMENT TO SPECIFIED DEPTHS.

STEP 4 REMOVAL OF EXISTING PAVEMENT MATERIAL, MEMBRANE WATERPROOFING, AND JOINT MATERIAL FULL DEPTH WITHIN LIMITS SHOWN. TO BE PAID FOR UNDER THE ITEM "REMOVAL OF EXISTING WEARING SURFACE".

STEP 5 INSTALL TEMPORARY BACKER ROD FLUSH WITH BRIDGE DECK AND APPROACH SLAB.

STEP 6 REPAIR DETERIORATED CONCRETE AS NEEDED TO BE PAID FOR UNDER "PARTIAL DEPTH PATCH". REFER TO DWG. NO. S-08.

STEP 7 INSTALL WATERPROOFING MEMBRANE (WOVEN GLASS FABRIC) TO THE TOP OF THE DECK, BACKWALL, AND CONCRETE SLAB WITHIN THE LIMITS SHOWN.

STEP 8 PLACE BITUMINOUS CONCRETE IN JOINT CUT-OUT (REFER TO DWG. NOS. S10 TO S-13 FOR PAVEMENT REQUIREMENTS).

STEP 9 PAVE TOP COURSE ON ROADWAY AND BRIDGE.

STEP 10 SAWCUT PAVEMENT FULL DEPTH AT 10" FROM CENTER OF JOINT (BOTH SIDES OF JOINT) AND REMOVE ALL PAVEMENT MATERIAL BETWEEN SAWCUTS TO BE PAID FOR UNDER "ASPHALTIC PLUG EXPANSION JOINT SYSTEM".

STEP 11 INSTALL PROPOSED ASPHALTIC PLUG EXPANSION JOINT SYSTEM WITH PREFORMED JOINT SEAL AND BRIDGING PLATE. LOCATOR PINS SHALL NOT BE USED TO SECURE THE BRIDGING PLATE.

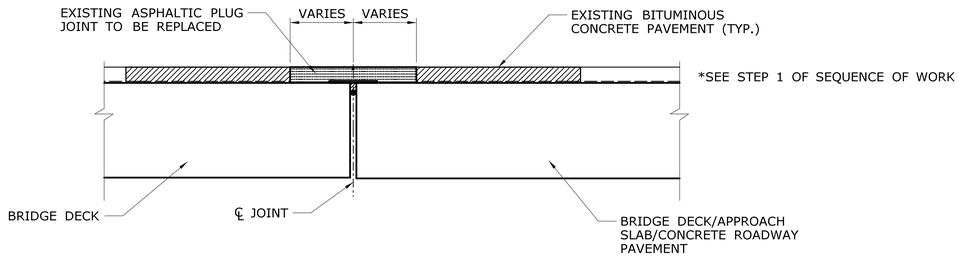

EXISTING CONDITIONS

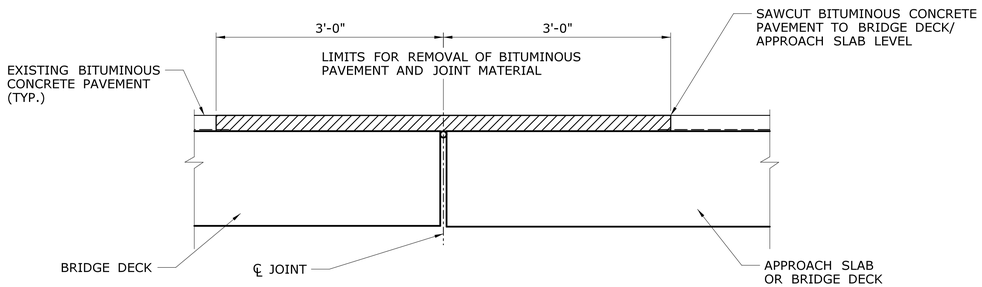

INTERMEDIATE CONDITION
JOINT AND PAVEMENT REMOVAL (STEPS 1-3)

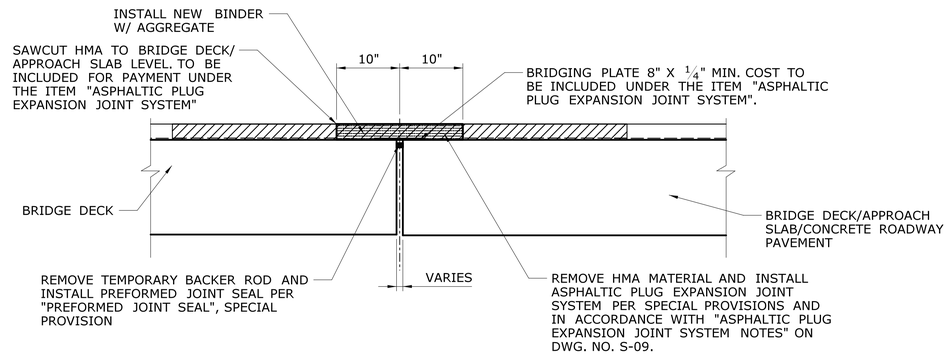

FINAL CONDITION (STEPS 7-9)

* SHOULD THE ELEVATION OF THE APROACH SLAB AND BRIDGE DECK DIFFER BY MORE THEN 1/8" DO NOT INSTALL THE BRIDGING PLATE

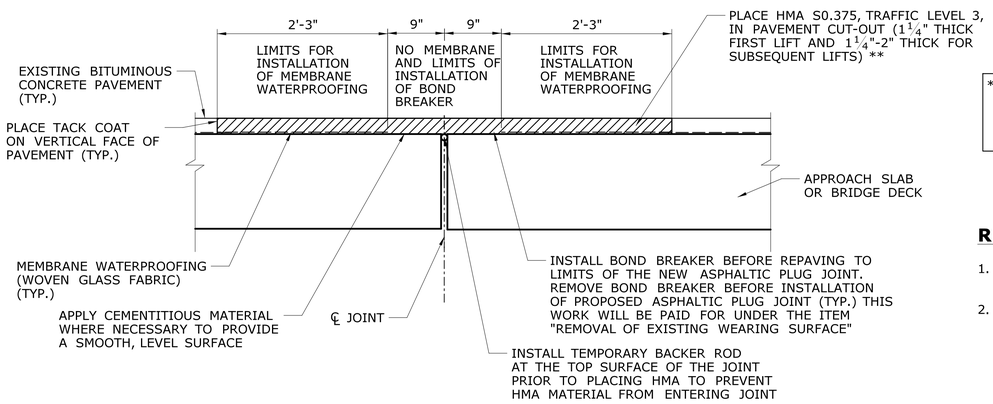

** LIFT THICKNESS TO BE ADJUSTED TO MATCH ADJACENT PAVEMENT THICKNESS. SEE STEP 6 OF SEQUENCE OF WORK

INTERMEDIATE CONDITION
PLACEMENT OF PAVEMENT IN JOINT CUTOUT (STEPS 4-6)

REFERENCES:

1. SEE DWG. NOS. S-34 AND S-52 FOR ASPHALTIC PLUG EXPANSION JOINT SYSTEM LOCATIONS.
2. SEE DWG. NO. S-09 FOR GENERAL ASPHALTIC PLUG EXPANSION JOINT NOTES.

SEQUENCE OF WORK

STEP 1: CONTRACTOR SHALL PERFORM AN EXPLORATION AT THE GUTTER LINE AT EACH END OF JOINT AND THE CROWN AT THE BEGINNING AND END OF THE BRIDGE. A MINIMUM OF SIX REPRESENTATIVE DEPTH MEASUREMENTS SHALL BE TAKEN AT THESE LOCATIONS (ADDITIONAL MEASUREMENTS SHALL BE TAKEN, IF NEEDED, IN ACCORDANCE TO SPECIAL PROVISION "REMOVAL OF EXISTING WEARING SURFACE") TO DETERMINE THE DEPTH OF PAVEMENT AND THE LOCATION OF THE DECK ENDS (CENTERLINE OF PROPOSED JOINT) BEFORE PROCEEDING TO STEP 2.

STEP 2: SAWCUT BITUMINOUS PAVEMENT ON BOTH SIDES OF EXISTING JOINT FOR PAVEMENT CUT-OUT. EACH SAWCUT LINE SHALL BE 3' FROM THE CENTERLINE OF EXISTING JOINT. SAWCUT SHALL NOT DAMAGE EXISTING DECK OR APPROACH SLAB. TO BE PAID FOR UNDER THE ITEM "CUT BITUMINOUS CONCRETE PAVEMENT".

STEP 3: REMOVE EXISTING PAVEMENT MATERIAL, MEMBRANE WATERPROOFING, AND JOINT MATERIAL WITHIN THE LIMITS SHOWN. TO BE PAID FOR UNDER THE ITEM "REMOVAL OF EXISTING WEARING SURFACE".

STEP 4: REPAIR SURFACE OF DECK AND APPROACH SLAB AS REQUIRED AND INSTALL MEMBRANE TO THE TOP OF DECK WITHIN THE LIMITS SHOWN. INSTALL BOND BREAKER BEFORE REPAVING TO THE LIMITS OF NEW ASPHALTIC PLUG JOINT. MEMBRANE WATERPROOFING TO BE PAID FOR UNDER THE ITEM "MEMBRANE WATERPROOFING (WOVEN GLASS FABRIC)". BOND BREAKER TO BE INCLUDED FOR PAYMENT UNDER THE ITEM "HMA S0.375".

STEP 5: PLACE TACK COAT ON VERTICAL EDGE OF PAVEMENT ALONG SAWCUT LINES TO BE PAID FOR UNDER THE ITEM "MATERIAL FOR TACK COAT". INSTALL TEMPORARY BACKER ROD FLUSH WITH THE BRIDGE DECK AND APPROACH SLAB, TO BE INCLUDED FOR PAYMENT UNDER THE ITEM "ASPHALTIC PLUG EXPANSION JOINT SYSTEM".

STEP 6: PLACE HMA S0.375 IN THE JOINT CUT-OUT. TO BE PAID FOR UNDER THE ITEM "HMA S0.375".

STEP 7: CUT PAVEMENT FULL DEPTH, 10" EACH SIDE OF CENTER OF JOINT, AND REMOVE ALL PAVEMENT MATERIAL AND BOND BREAKER BETWEEN SAWCUTS.

STEP 8: INSTALL PROPOSED ASPHALTIC PLUG EXPANSION JOINT SYSTEM. TO BE PAID FOR UNDER THE ITEM "ASPHALTIC PLUG EXPANSION JOINT SYSTEM".

STEP 9: PLACE TACK COAT AT CURB LINE ALONG THE LENGTH OF THE BRIDGE, BOTH SIDES.

PROPOSED ASPHALTIC PLUG EXPANSION JOINT SYSTEM WITH BRIDGING PLATE

REV.	DATE	REVISION DESCRIPTION	SHEET NO.

THE INFORMATION, INCLUDING ESTIMATED QUANTITIES OF WORK, SHOWN ON THESE SHEETS IS BASED ON LIMITED INVESTIGATIONS BY THE STATE AND IS IN NO WAY WARRANTED TO INDICATE THE CONDITIONS OF ACTUAL QUANTITIES OF WORK WHICH WILL BE REQUIRED.

Plotted Date: 8/8/2017

DESIGNER/DRAFTER: D.C./S.C.
CHECKED BY: J.H.M. II
SCALE: 1" = 1'-0"

STATE OF CONNECTICUT
DEPARTMENT OF TRANSPORTATION

Filename: ...\SB_MSH_0_174_402_S_10_JOINT_1.dgn

SIGNATURE/ BLOCK:
Close, Jensen and Miller, P.C.
1137 Silas Deane Highway
Wethersfield, CT 06109

PROJECT TITLE: BEAM END REPAIR AND BEARING REPLACEMENT IN DISTRICT 4

TOWN: VARIOUS

DRAWING TITLE: ASPHALTIC PLUG EXP. JOINT DETAILS - 1

PROJECT NO. 174-402
DRAWING NO. S-10
SHEET NO. 03.10

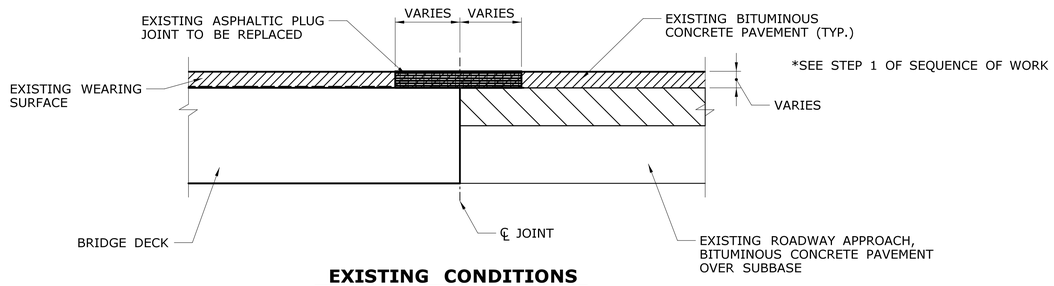

EXISTING CONDITIONS

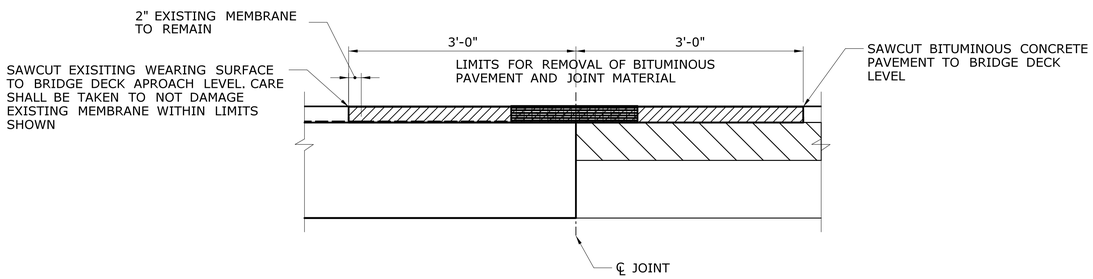

INTERMEDIATE CONDITION
JOINT AND PAVEMENT REMOVAL (STEPS 1-3)

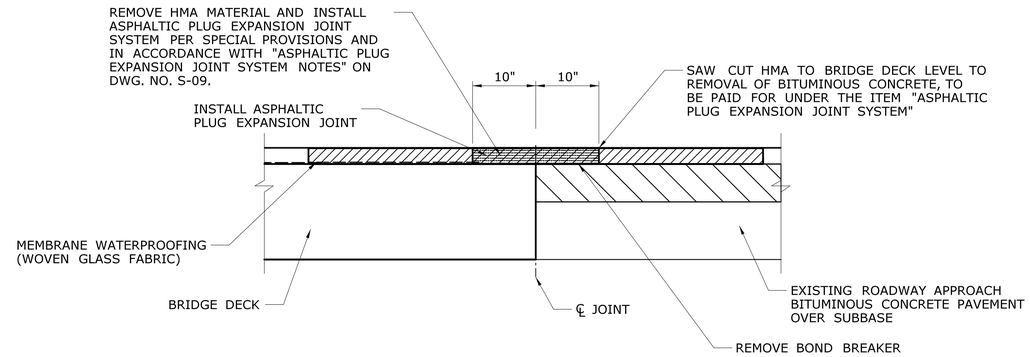

FINAL CONDITION (STEPS 7-9)

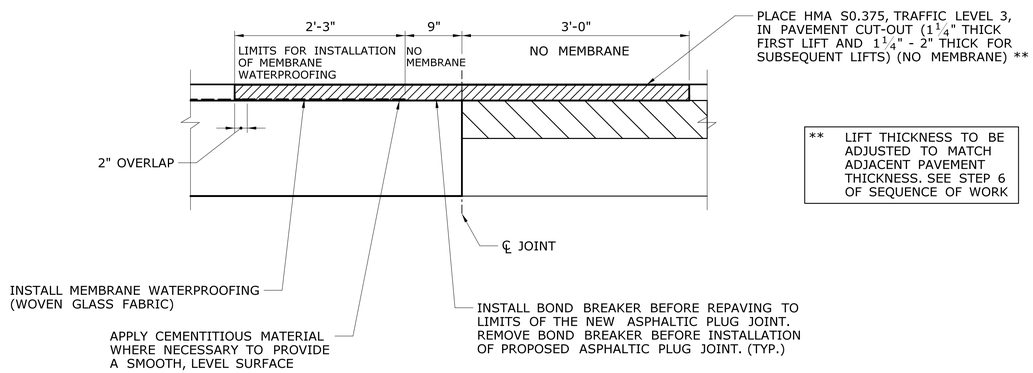

** LIFT THICKNESS TO BE ADJUSTED TO MATCH ADJACENT PAVEMENT THICKNESS. SEE STEP 6 OF SEQUENCE OF WORK

INTERMEDIATE CONDITION
PLACEMENT OF PAVEMENT IN JOINT CUTOUT (STEPS 4-6)

REFERENCES:

1. SEE DWG. NO. S-09 FOR GENERAL ASPHALTIC PLUG EXPANSION JOINT NOTES.
2. SEE DWG. NOS. S-34 AND S-52 FOR ASPHALTIC PLUG EXPANSION JOINT SYSTEM LOCATIONS.

SEQUENCE OF WORK

STEP 1: CONTRACTOR SHALL PERFORM AN EXPLORATION AT THE GUTTER LINE AT EACH END OF JOINT AND THE CROWN AT THE BEGINNING AND END OF THE BRIDGE. A MINIMUM OF SIX REPRESENTATIVE DEPTH MEASUREMENTS SHALL BE TAKEN AT THESE LOCATIONS (ADDITIONAL MEASUREMENTS SHALL BE TAKEN, IF NEEDED, IN ACCORDANCE TO SPECIAL PROVISION "REMOVAL OF EXISTING WEARING SURFACE") TO DETERMINE THE DEPTH OF PAVEMENT AND THE LOCATION OF THE DECK ENDS (CENTERLINE OF PROPOSED JOINT) BEFORE PROCEEDING TO STEP 2.

STEP 2: SAWCUT BITUMINOUS PAVEMENT ON BOTH SIDES OF EXISTING JOINT FOR PAVEMENT CUT-OUT. EACH SAWCUT LINE SHALL BE 3' FROM THE CENTERLINE OF EXISTING JOINT. SAWCUT SHALL NOT DAMAGE EXISTING DECK OR APPROACH PAVEMENT TO REMAIN. TO BE PAID FOR UNDER THE ITEM "CUT BITUMINOUS CONCRETE PAVEMENT".

STEP 3: REMOVE EXISTING PAVEMENT MATERIAL, MEMBRANE WATERPROOFING, AND JOINT MATERIAL WITHIN THE LIMITS SHOWN. TO BE PAID FOR UNDER THE ITEM "REMOVAL OF EXISTING WEARING SURFACE".

STEP 4: REPAIR SURFACE OF DECK AND APPROACH PAVEMENT AS REQUIRED AND INSTALL MEMBRANE TO THE TOP OF DECK WITHIN THE LIMITS SHOWN. INSTALL BOND BREAKER BEFORE RE-PAVING TO THE LIMITS OF NEW ASPHALTIC PLUG JOINT. MEMBRANE WATERPROOFING TO BE PAID FOR UNDER THE ITEM "MEMBRANE WATERPROOFING (WOVEN GLASS FABRIC)". BOND BREAKER TO BE INCLUDED FOR PAYMENT UNDER THE ITEM "HMA S0.375".

STEP 5: PLACE TACK COAT ON VERTICAL EDGE OF PAVEMENT ALONG SAWCUT LINES TO BE PAID FOR UNDER "MATERIAL FOR TACK COAT". INSTALL TEMPORARY BACKER ROD FLUSH WITH THE BRIDGE DECK AND APPROACH SLAB, TO BE INCLUDED FOR PAYMENT UNDER THE ITEM "ASPHALTIC PLUG EXPANSION JOINT SYSTEM".

STEP 6: PLACE HMA S0.375 IN THE JOINT CUT-OUT. TO BE PAID FOR UNDER THE ITEM "HMA S0.375".

STEP 7: CUT PAVEMENT FULL DEPTH, 10" EACH SIDE OF CENTER OF JOINT, AND REMOVE ALL PAVEMENT MATERIAL AND BOND BREAKER BETWEEN SAWCUTS.

STEP 8: INSTALL PROPOSED ASPHALTIC PLUG EXPANSION JOINT SYSTEM. TO BE PAID FOR UNDER THE ITEM "ASPHALTIC PLUG EXPANSION JOINT SYSTEM".

STEP 9: PLACE TACK COAT AT CURB LINE ALONG THE LENGTH OF THE BRIDGE, BOTH SIDES.

PROPOSED ASPHALTIC PLUG EXPANSION JOINT SYSTEM
WITHOUT BRIDGING PLATE

REV.	DATE	REVISION DESCRIPTION	SHEET NO.

THE INFORMATION, INCLUDING ESTIMATED QUANTITIES OF WORK, SHOWN ON THESE SHEETS IS BASED ON LIMITED INVESTIGATIONS BY THE STATE AND IS IN NO WAY WARRANTED TO INDICATE THE CONDITIONS OF ACTUAL QUANTITIES OF WORK WHICH WILL BE REQUIRED.

Plotted Date: 8/8/2017

DESIGNER/DRAFTER: D.C./S.C.
CHECKED BY: J.H.M. II
SCALE: 1" = 1'-0"

STATE OF CONNECTICUT
DEPARTMENT OF TRANSPORTATION

Filename: ...\SB_MSH_0_174_402_S_11_JOINT_2.dgn

SIGNATURE/BLOCK:
Close, Jensen and Miller, P.C.
1137 Silas Deane Highway
Wethersfield, CT 06109

PROJECT TITLE: BEAM END REPAIR AND BEARING REPLACEMENT IN DISTRICT 4

TOWN: VARIOUS

DRAWING TITLE: ASPHALTIC PLUG EXP. JOINT DETAIL - 2

PROJECT NO. 174-402
DRAWING NO. S-11
SHEET NO. 03.11

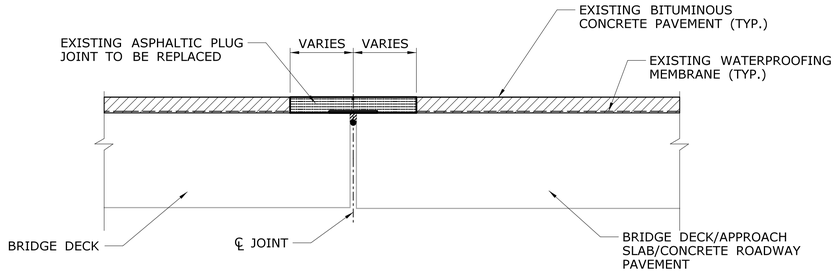

EXISTING CONDITIONS

SCALE: 1" = 1'-0"

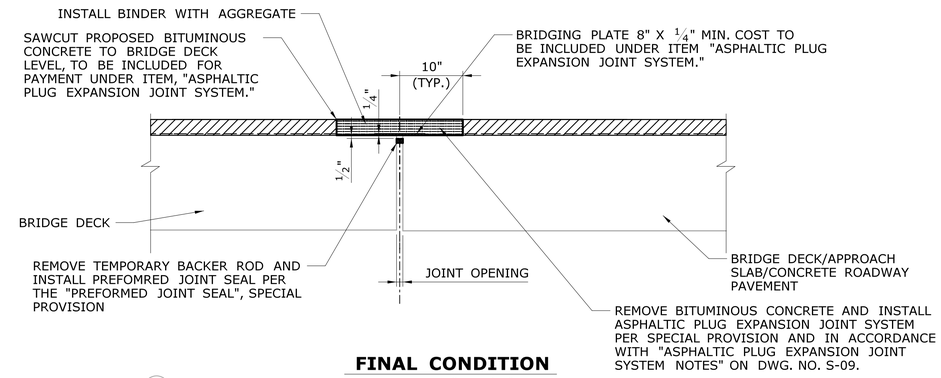

FINAL CONDITION

SCALE: 1" = 1'-0"

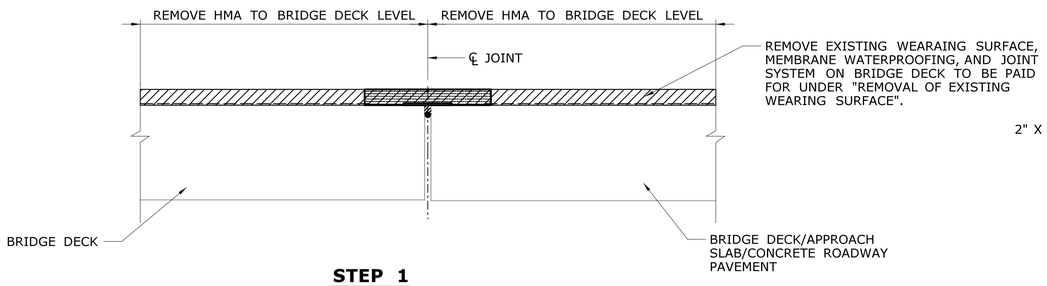

STEP 1

SCALE: 1" = 1'-0"

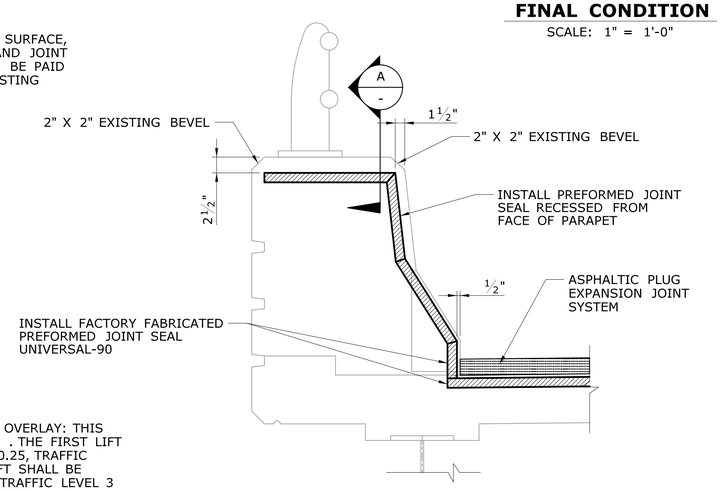

JOINT TREATMENT AT PARAPET

SCALE: 1" = 1'-0"

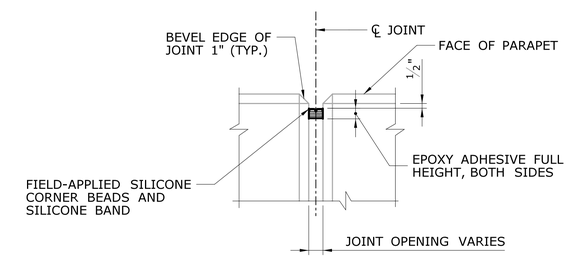

SECTION A -

SCALE: 1 1/2" = 1'-0"

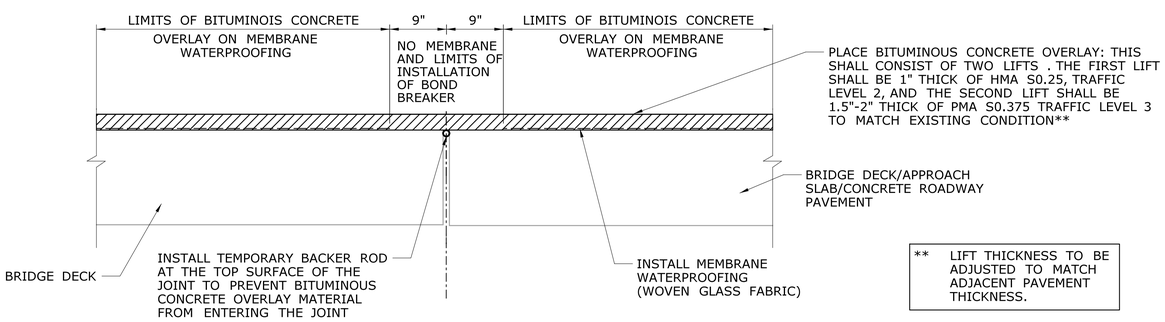

** LIFT THICKNESS TO BE ADJUSTED TO MATCH ADJACENT PAVEMENT THICKNESS.

STEP 2

SCALE: 1" = 1'-0"

JOINT REPLACEMENT NOTES:

1. SEE DWG. NO. S-09 FOR ASPHALTIC PLUG EXPANSION JOINT SYSTEM NOTES AND REPAIR PROCEDURE.
2. WORK FOR REPLACING EXISTING ASPHALTIC PLUG EXPANSION JOINT SYSTEM WITH NEW ASPHALTIC PLUG EXPANSION JOINT SYSTEM SHALL BE PAID FOR UNDER ITEM "ASPHALTIC PLUG EXPANSION JOINT SYSTEM."
3. AN EXISTING BACKER ROD AND JOINT SEALANT SHALL BE COMPLETELY REMOVED PRIOR TO INSTALLING NEW JOINT SEAL.
4. SURFACE OF CONCRETE ALONG JOINT SHALL BE CLEANED BY SANDBLASTING. SURFACE TO WHICH EPOXY ADHESIVE WILL ADHERE SHALL BE FREE OF DUST AND LOOSE OR DETERIORATED CONCRETE BEFORE INSTALLING PREFORMED JOINT SEAL.
5. COST OF SEALING PARAPET JOINTS TO BE INCLUDED FOR PAYMENT UNDER THE ITEM "PREFORMED JOINT SEAL".

REFERENCES:

1. SEE DWG. NO. S-49 FOR ASPHALTIC PLUG EXPANSION JOINT SYSTEM LOCATIONS.
2. SEE DWG. NO. S-09 FOR GENERAL ASPHALTIC PLUG EXPANSION JOINT NOTES.
3. SEE DWG. NO. S-09 FOR SUGESTED SEQUENCE OF WORK FOR ASPHALTIC PLUG WITH EMSEAL JOINT.

PROPOSED ASPHALTIC PLUG EXPANSION JOINT SYSTEM FOR BRIDGES WITH FULL PAVEMENT RECONSTRUCTION

REV.	DATE	REVISION DESCRIPTION	SHEET NO.

THE INFORMATION, INCLUDING ESTIMATED QUANTITIES OF WORK, SHOWN ON THESE SHEETS IS BASED ON LIMITED INVESTIGATIONS BY THE STATE AND IS IN NO WAY WARRANTED TO INDICATE THE CONDITIONS OF ACTUAL QUANTITIES OF WORK WHICH WILL BE REQUIRED.

Plotted Date: 8/8/2017

DESIGNER/DRAFTER: D.C./S.C.
CHECKED BY: J.H.M. II
SCALE AS NOTED

STATE OF CONNECTICUT
DEPARTMENT OF TRANSPORTATION

Filename: ...\SB_MSH_0_174_402_S_12_JOINT_3.dgn

SIGNATURE/BLOCK:
Close, Jensen and Miller, P.C.
1137 Silas Deane Highway
Wethersfield, CT 06109

PROJECT TITLE: BEAM END REPAIR AND BEARING REPLACEMENT IN DISTRICT 4

TOWN: VARIOUS

DRAWING TITLE: ASPHALTIC PLUG EXP. JOINT DETAILS - 3

PROJECT NO. 174-402
DRAWING NO. S-12
SHEET NO. 03.12

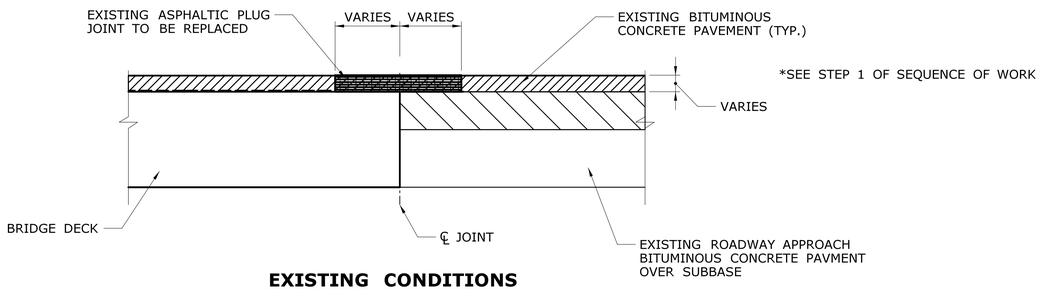

EXISTING CONDITIONS

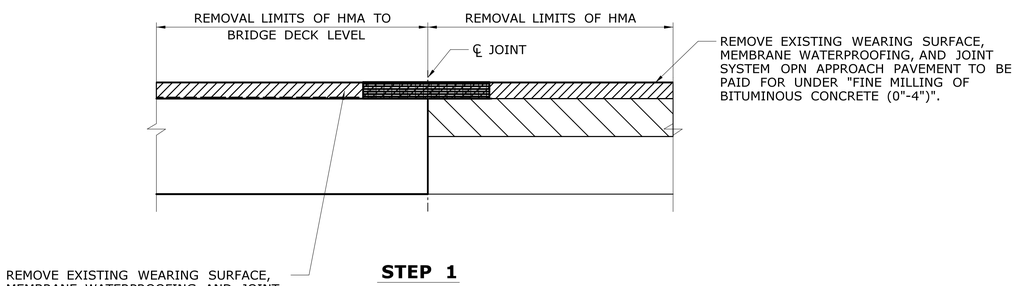

STEP 1

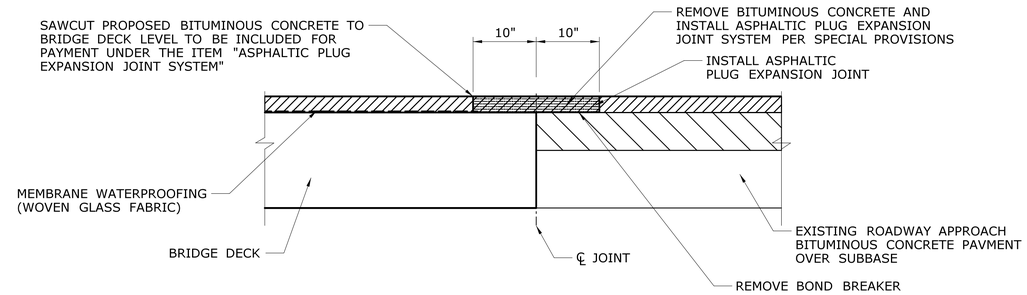

FINAL CONDITION

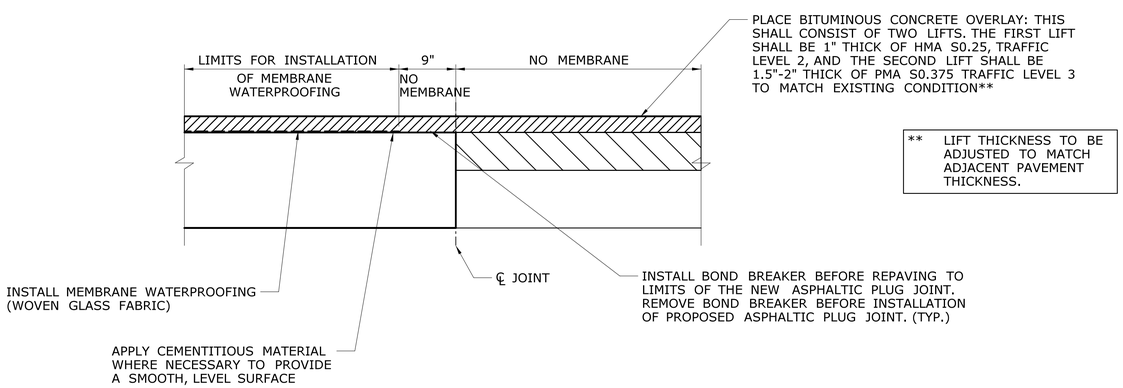

** LIFT THICKNESS TO BE ADJUSTED TO MATCH ADJACENT PAVEMENT THICKNESS.

STEP 2

REFERENCES:

1. SEE DWG. NO. S-09 FOR GENERAL ASPHALTIC PLUG EXPANSION JOINT NOTES.
2. SEE DWG. NO. S-49 FOR ASPHALTIC PLUG EXPANSION JOINT SYSTEM LOCATIONS.

JOINT REPLACEMENT NOTES:

1. SEE DWG. NO. S-09 FOR ASPHALTIC PLUG EXPANSION JOINT SYSTEM NOTES AND REPAIR PROCEDURE.
2. WORK FOR REPLACING EXISTING ASPHALTIC PLUG EXPANSION JOINT SYSTEM WITH NEW ASPHALTIC PLUG EXPANSION JOINT SYSTEM SHALL BE PAID FOR UNDER ITEM "ASPHALTIC PLUG EXPANSION JOINT SYSTEM."
3. AN EXISTING BACKER ROD AND JOINT SEALANT SHALL BE COMPLETE REMOVED PRIOR TO INSTALLING NEW JOINT SEAL.
4. BOND BREAKER TO BE INCLUDED FOR PAYMENT UNDER THE ITEM "HMA S0.25".

PROPOSED ASPHALTIC PLUG EXPANSION JOINT SYSTEM FOR BRIDGES WITH FULL PAVEMENT RECONSTRUCTION

REV.	DATE	REVISION DESCRIPTION	SHEET NO.

THE INFORMATION, INCLUDING ESTIMATED QUANTITIES OF WORK, SHOWN ON THESE SHEETS IS BASED ON LIMITED INVESTIGATIONS BY THE STATE AND IS IN NO WAY WARRANTED TO INDICATE THE CONDITIONS OF ACTUAL QUANTITIES OF WORK WHICH WILL BE REQUIRED.

Plotted Date: 8/8/2017

DESIGNER/DRAFTER: D.C./S.C.
CHECKED BY: J.H.M. II
SCALE: 1" = 1'-0"

STATE OF CONNECTICUT
DEPARTMENT OF TRANSPORTATION

Filename: ...\SB_MSH_0_174_402_S_13_JOINT_4.dgn

SIGNATURE/BLOCK:
Close, Jensen and Miller, P.C.
1137 Silas Deane Highway
Wethersfield, CT 06109

PROJECT TITLE: BEAM END REPAIR AND BEARING REPLACEMENT IN DISTRICT 4

TOWN: VARIOUS

DRAWING TITLE: ASPHALTIC PLUG EXP. JOINT DETAIL - 4

PROJECT NO. 174-402
DRAWING NO. S-13
SHEET NO. 03.13

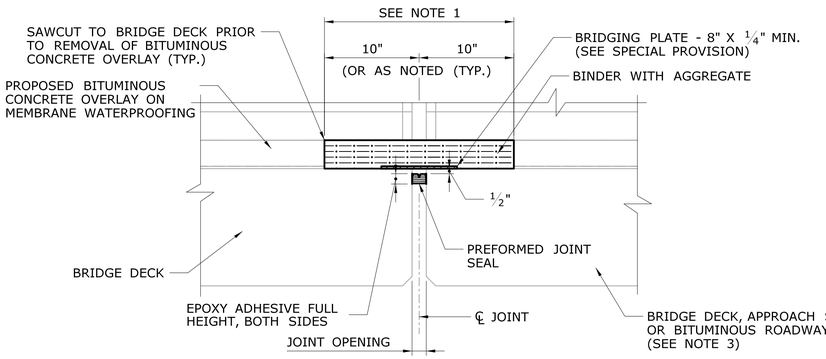

A
-
SECTION
SCALE: 1 1/2" = 1'-0"

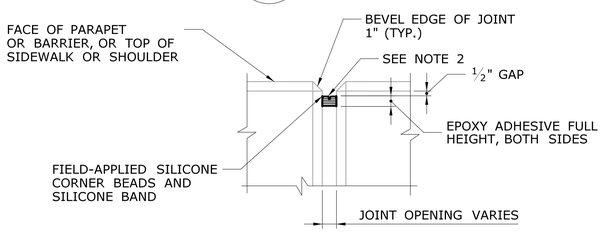

B
-
SECTION
SCALE: 1 1/2" = 1'-0"

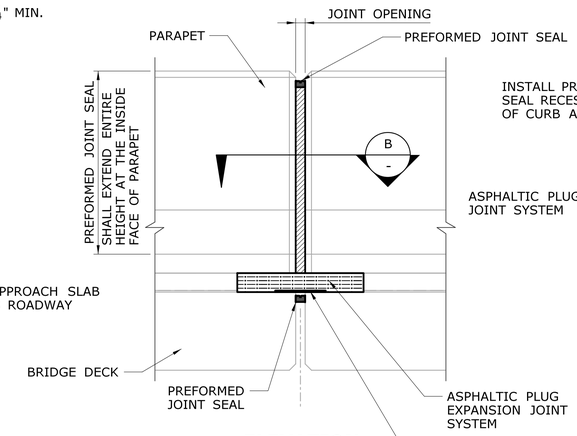

ELEVATION
SCALE: 1" = 1'-0"

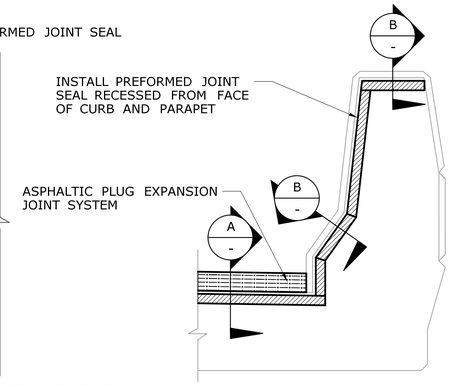

SECTION AT PARAPET
SCALE: 1" = 1'-0"

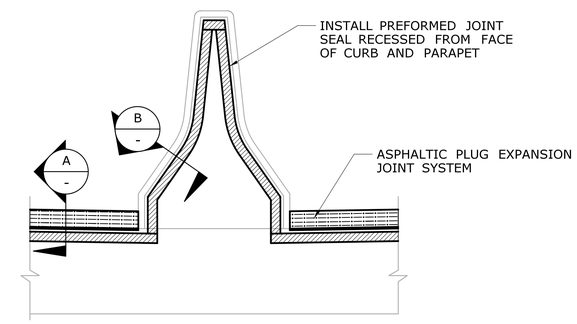

SECTION AT MEDIAN
SCALE: 1" = 1'-0"

* SHOULD THE ELEVATION OF THE APPROACH SLAB AND BRIDGE DECK DIFFER BY MORE THAN 1/8", DO NOT INSTALL THE BRIDGING PLATE

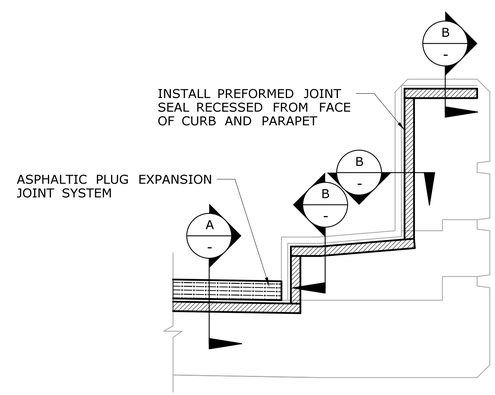

SECTION AT SAFETYWALK
SCALE: 1" = 1'-0"

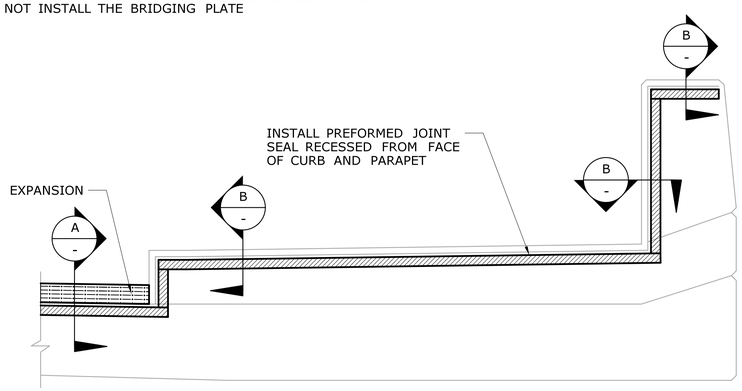

SECTION AT SIDEWALK
SCALE: 1" = 1'-0"

NOTES:

1. REMOVE EXISTING HMA OVERLAY, MEMBRANE WATERPROOFING, AND JOINT MATERIAL. REPLACE WITH ASPHALTIC PLUG EXPANSION JOINT SYSTEM, TO BE PAID FOR UNDER THE ITEM "ASPHALTIC PLUG EXPANSION JOINT SYSTEM".
2. PRIOR TO INSTALLING THE PREFORMED JOINT SEAL, REMOVE ANY EXISTING BACKER ROD AND ALL SEALANT AND CLEAN JOINT SIDES BY SANDBLASTING. DUST SHALL BE REMOVED BY THE METHOD APPROVED BY THE ENGINEER. THIS WORK SHALL BE INCLUDED FOR PAYMENT UNDER THE ITEM "PREFORMED JOINT SEAL".
3. WHERE THE BRIDGE DECK ABUTS A BITUMINOUS ROADWAY, OR SHOULDER, BRIDGING PLATES SHALL NOT BE INSTALLED (SEE SPECIAL PROVISION "ASPHALTIC PLUG EXPANSION JOINT SYSTEM").
4. AT LOCATIONS AS NEEDED, SEAL THE JOINT BETWEEN THE PARAPET AND CURB OR WINGWALL AS SHOWN ON THE PLANS IN ACCORDANCE WITH SILICONE JOINT SEALANT RECESSED FROM FACE OF PARAPET DETAIL. THIS WORK SHALL BE INCLUDED FOR PAYMENT UNDER THE ITEM "ASPHALTIC PLUG EXPANSION JOINT SYSTEM.

REFERENCES:

1. SEE DWG. NOS. S-34, S-49 AND S-52 FOR ASPHALTIC PLUG EXPANSION JOINT SYSTEM LOCATIONS.
2. SEE DWG. NO. S-09 FOR GENERAL ASPHALTIC PLUG EXPANSION JOINT NOTES.
3. SEE DWG. NOS. S-10 TO S-13 FOR ASPHALTIC PLUG EXPANSION JOINT SYSTEM CROSS SECTIONS.
4. SEE DWG NO. S-09 FOR SUGGESTED SEQUENCE OF WORK (STEPS 1 TO 11) FOR PREFORMED JOINT SEAL.

ASPHALTIC PLUG EXPANSION JOINT SYSTEM

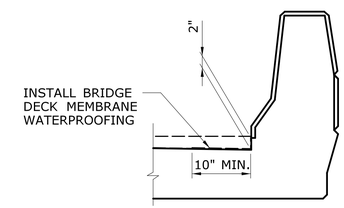

LIMITS OF NEW MEMBRANE WATERPROOFING
NOT TO SCALE

REV.	DATE	REVISION DESCRIPTION	SHEET NO.

THE INFORMATION, INCLUDING ESTIMATED QUANTITIES OF WORK, SHOWN ON THESE SHEETS IS BASED ON LIMITED INVESTIGATIONS BY THE STATE AND IS IN NO WAY WARRANTED TO INDICATE THE CONDITIONS OF ACTUAL QUANTITIES OF WORK WHICH WILL BE REQUIRED.

Plotted Date: 8/8/2017

DESIGNER/DRAFTER: D.C./S.C.
CHECKED BY: J.H.M. II
SCALE AS NOTED

STATE OF CONNECTICUT
DEPARTMENT OF TRANSPORTATION

Filename: ...\SB_MSH_0_174_402_S_14_JOINT_5.dgn

SIGNATURE/BLOCK:
Close, Jensen and Miller, P.C.
1137 Silas Deane Highway
Wethersfield, CT 06109

PROJECT TITLE:
BEAM END REPAIR AND BEARING REPLACEMENT IN DISTRICT 4

TOWN: **VARIOUS**

DRAWING TITLE: **ASPHALTIC PLUG EXP. JOINT DETAILS - 5**

PROJECT NO. 174-402
DRAWING NO. S-14
SHEET NO. 03.14

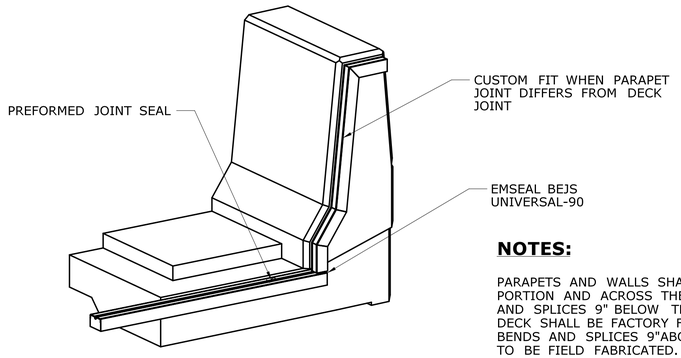

ISOMETRIC VIEW

NOTES:

PARAPETS AND WALLS SHALL BE SEALED FOR THE ENTIRE VERTICAL PORTION AND ACROSS THE TOP WITH THE SEALING ELEMENT - BENDS AND SPLICES 9" BELOW THE CURBLINE AND THE TRANSITION INTO THE DECK SHALL BE FACTORY FABRICATED. ROADWAY SPICES AS WELL AS BENDS AND SPLICES 9"ABOVE THE CURBLINE AND HIGHER IS ALLOWED TO BE FIELD FABRICATED.

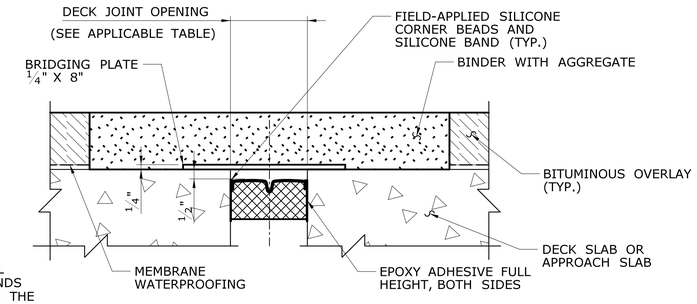

SECTION A
SCALE: 3" = 1'-0"

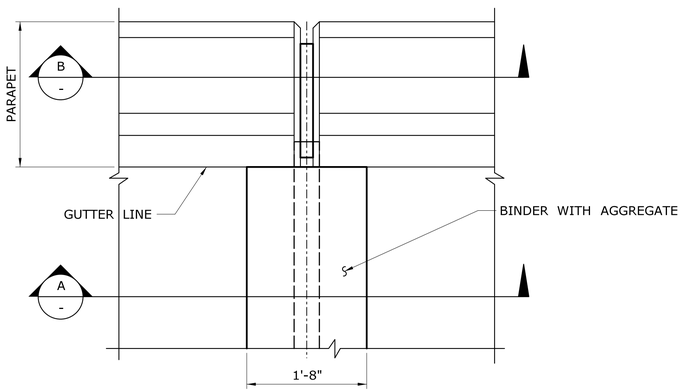

PLAN

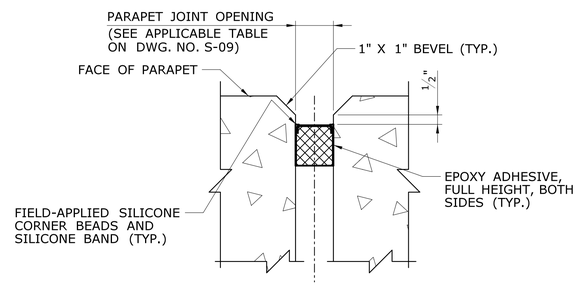

SECTION B
SCALE: 3" = 1'-0"

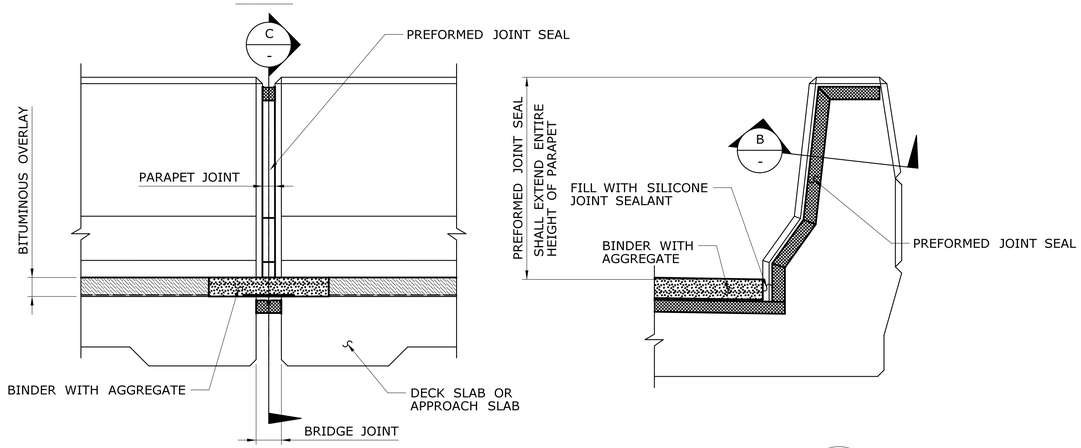

ELEVATION

SECTION C

REFERENCE:

1. SEE DWG. NO. S-09 FOR SUGGESTED SEQUENCE OF WORK.
2. SEE DWG. NO. S-09 FOR ASPHALTIC PLUG EXPANSION JOINT NOTES.

NOTES:

1. PRIOR TO INSTALLING THE SILICONE SEALANT, CLEAN JOINT SIDES BY SANDBLASTING. DUST SHALL BE REMOVED BY THE METHOD APPROVED BY THE ENGINEER. THIS WORK SHALL BE PAID FOR UNDER THE ITEM "PREFORMED JOINT SEAL".
2. THE CONTRACTOR IS RESPONSIBLE FOR MEASURING THE JOINT GAP WIDTHS IN BOTH, THE BRIDGE DECKS AND THE PARAPETS, IN ACCORDANCE WITH THE "PREFORMED JOINT SEAL" SPECIFICATIONS. THE MEASUREMENTS SHOULD ALSO INCLUDE THE MINIMUM AND MAXIMUM BRIDGE DECK JOINT WIDTH ALONG THE JOINT TO DETERMINE THE APPROXIMATE SIZE JOINT SEAL. THE CONTRACTOR SHALL SELECT A PROPERLY-SIZED JOINT BASED ON THE MEASUREMENTS AND THERMAL MOVEMENT RANGE. HE SHALL SUBMIT THIS WITH CATALOGUE CUTS AND A "QUALITY CONTROL PLAN" TO THE DESIGN ENGINEER FOR REVIEW. THE DESIGN ENGINEER SHALL RECEIVE THE JOINT GAP WIDTH MEASUREMENT AND "QUALITY CONTROL PLAN" AT LEASE 30 DAYS PRIOR TO START OF WORK.
3. WORK THIS SHEET WITH THE DECK END REPAIR DETAILS SHOWN ON SHEETS S-32 TO S-34 AND S-50.
4. JOINT SEAL AND INSTALLATION PAID FOR AS "PREFORMED JOINT SEAL".

JOINT TREATMENT AT EXPANSION JOINTS
SCALE: 1" = 1'-0"

REV.	DATE	REVISION DESCRIPTION	SHEET NO.

THE INFORMATION, INCLUDING ESTIMATED QUANTITIES OF WORK, SHOWN ON THESE SHEETS IS BASED ON LIMITED INVESTIGATIONS BY THE STATE AND IS IN NO WAY WARRANTED TO INDICATE THE CONDITIONS OF ACTUAL QUANTITIES OF WORK WHICH WILL BE REQUIRED.

Plotted Date: 8/8/2017

DESIGNER/DRAFTER: D.C./S.C.
CHECKED BY: J.H.M. II
SCALE AS NOTED

STATE OF CONNECTICUT
DEPARTMENT OF TRANSPORTATION

Filename: ..\SB_MSH_0_174_402_S_15_JOINT_6.dgn

SIGNATURE/ BLOCK:
Close, Jensen and Miller, P.C.
1137 Silas Deane Highway
Wethersfield, CT 06109

PROJECT TITLE:
BEAM END REPAIR AND BEARING REPLACEMENT IN DISTRICT 4

TOWN: **VARIOUS**

DRAWING TITLE: **ASPHALTIC PLUG EXP. JOINT DETAILS - 6**

PROJECT NO. 174-402
DRAWING NO. S-15
SHEET NO. 03.15

REPAIR AND DETAILING:

1. KNOWN OR SUSPECTED DETERIORATED STEEL AREAS ARE DELINEATED IN THESE PLANS. THESE AREAS ARE BASED UPON CTDOT INSPECTION REPORT FINDINGS. THERE MAY BE ADDITIONAL DETERIORATED AREAS. THE CONTRACTOR AND ENGINEER ARE TO PERFORM A THOROUGH EVALUATION OF ALL BRIDGE STEEL. THE DEFINITION OF DETERIORATED AREAS IS OBVIOUS PERFORATIONS, AND SECTION LOSS. ANY DETERIORATED PORTIONS OF THE GIRDER AND/OR ATTACHEMENTS SHALL BE REPAIRED IN ACCORDANCE WITH THE FOLLOWING CRITERIA AS STATED IN NOTE 2 BELOW AND AS ORDERED BY THE ENGINEER

2. DETERIORATION WHICH REQUIRE REPAIR IS DEFINED AS:
   A. FLANGES - REPAIR AREAS WITH THICKNESS LOSS > 10% IN THE MIDDLE 0.8L (0.4L FROM CENTER OF SPAN). AREAS WITHE LESS THAN 10% SECTION LOSS WILL NOT BE REPAIRED.
   B. WEBS - REPAIR AREAS WITH THICKNESS LOSS > 10% IN THE END
   C. STIFFENERS - REPAIR AREAS WITH THICKNESS LOSS > 20% IN THE END
   D. END DIAPHRAGMS - REPAIR AREAS WITH THICKNESS LOSS > 10%
   E. INTERMEDIATE DIAPHRAGMS - REPAIR AREAS WITH THICKNESS LOSS > 20%

3. SHOP DRAWINGS OF EACH INDIVIDUAL REPAIR ARE TO BE SUBMITTED AND MUST INCLUDE FIELD SKETCHES AND PHOTOGRAPHS WITH; DETERIORATION AREA MEASUREMENTS AND REMAINING THICKNESS MEASUREMENTS, NEW SHAPE DIMENSIONING AND POSITIONING, AND WELDING OR BOLTING. EXISTING WELDS ARE TO BE FIELD MEASURED SO THAT THE REPAIR SHAPES ACCOMMODATE THEM. THE SHOP DRAWINGS ARE TO INCLUDE THE TYPE OF PRIMER TO BE SHOP APPLIED TO THE NEW STEEL SHAPES.

4. ALL INSPECTION, DETAILING AND SHOP DRAWING DEVELOPMENT, CLEANING, CAULK, STEEL SHAPES, NUTS, BOLTS, WASHERS, WELD MATERIALS, PRIME COAT PAINTING OF NEW STEEL, AND LABOR AND EQUIPMENT NECESSARY FOR THESE STEEL REPAIRS ARE TO BE INCLUDED IN THE COST OF "STRUCTURAL STEEL REPAIRS (SITE NO. X)".

5. ALL NEW STRUCTURAL STEEL (LOW ALLOY) SHALL CONFORM TO AASHTO M270, GRADE 50 T2.

6. THICKNESS OF THE NEW PLATE, EXCEPT SEALING PLATE, SHALL NOT BE LESS THAN THE THICKNESS OF THE ACTUAL STEEL COMPONENT BEING REPAIRED.

7. WELDING DETAILS, PROCEDURES, AND TESTING METHODS SHALL CONFORM TO AASHTO/AWSD1.5M/D1.5: 2015 BRIDGE WELDING CODE.

8. MULTIPLE PASS WELDS INSPECTED BY THE MAGNETIC PARTICLE METHOD SHALL HAVE EACH PASS OR LAYER INSPECTED AND APPROVED PRIOR TO PROCEEDING TO THE NEXT PASS OR LAYER.

9. ALL BOLTED CONNECTIONS SHALL BE MADE WITH $^{7}/_{8}$" DIAMETER HIGH STRENGTH BOLTS CONFORMING TO ASTM A490 TYPE 1, NUTS SHALL CONFORM TO ASTM A563, GRADE DH3 AND WASHERS SHALL CONFORM TO ASTM F436, TYPE 1. HOLES FOR BOLTS ARE TO BE $^{15}/_{16}$" DIAMETER.

10. BOLTED CONNECTIONS SHALL BE CONSIDERED SLIP CRITICAL WITH CLASS B FAYING SURFACES. THE FAYING SURFACES SHALL BE FREE OF LOOSE SCALE (EXCEPT TIGHT MILL SCALE), BURRS, DIRT AND OTHER FOREIGN MATERIAL.

11. THE STRUCTURAL STEEL FABRICATOR SHALL BE CERTIFIED UNDER THE AISC QUALITY CONTROL PROGRAM AS "CATEGORY SBr - SIMPLE STEEL BRIDGE STRUCTURES".

COORDINATION AND SEQUENCING:

1. STEEL REPAIR IS TO BE COORDINATED WITH PAINTING. STEEL PAINTING IS TO CONFORM TO THE FOLLOWS:
   A. BEAM ENDS, DIAPHRAGMS, STIFFENERS AND ADJACENT STEEL ARE TO BE PAINTED IN ACCORDANCE WITH ITEM #06034XXA - ABRASIVE BLAST CLEANING AND FIELD PAINTING OF BEAM ENDS (SITE NO. X).
   B. BRIDGES TO BE COMPLETELY PAINTED ARE TO BE PAINTED IN ACCORDANCE WITH ITEM #06039XXA - ABRASIVE BLAST CLEANING AND FIELD PAINTING OF STRUCTURE (SITE NO. X).
   C. ALL OTHER LOCALIZED STEEL REPAIR AREAS OUTSIDE THE LIMITS OF THESE DESIGNATED AREAS ARE TO BE PAINTED IN ACCORDANCE WITH ITEM #0603729A - LOCALIZED PAINT REMOVAL AND FIELD PAINTING OF EXISTING STEEL.

   THE FINAL PAINT COAT(S) OF STEEL REPAIR WITHIN THE LIMITS OF THE ITEMS ABOVE WILL BE PAID FOR UNDER THOSE RESPECTIVE ITEMS. PRIME COAT PAINTING OF REPAIR STEEL SHAPES IS TO BE INCLUDED IN THE COST OF "STRUCTURAL STEEL REPAIRS (SITE NO. X)".

2. AREAS TO BE REPAIRED ARE TO BE FIELD INSPECTED AND DELINEATED BY THE CONTRACTOR AND ENGINEER AS A COOPERATIVE EFFORT. ACCESS TO THE AREAS TO BE INSPECTED IS TO BE SUPPLIED BY THE CONTRACTOR. THE DETERIORATED AREAS MAY REQUIRE HAND TOOL CLEANING (CHIPPING HAMMERS, WIRE BRUSHES, SCRAPERS, ETC...) TO PROPERLY ASSESS AND DELINEATE THE EXTENT OF DETERIORATION. THE COST OF ACCESS AND PRELIMINARY CLEANING IS TO BE INCLUDED IN THE COST OF THE STEEL REPAIR ITEMS.

3. ERECTION OF THE CONTAINMENT PLATFORM/SCAFFOLDING UNDER THE BRIDGE SHALL BE PERFORMED AND PAID FOR BASED ON REQUIREMENTS FOR EACH SPECIFIED ITEM.

4. THE REPAIRS ARE TO BE DETAILED BY THE CONTRACTOR AND SUBMITTED AS SHOP DRAWINGS WITH THE INFORMATION SPECIFIED ABOVE. THE SHOP DRAWINGS ARE TO INCLUDE THE TYPE OF PRIMER TO BE SHOP APPLIED TO THE NEW STEEL SHAPES. THE PRIMER MUST BE ONE OF THE APPROVED SYSTEMS OF THE PAINTING SPECIFICATIONS. NEW REPAIR STEEL SHAPES ARE TO BE FABRICATED AND SHIPPED WITH THE PRIME COAT APPLIED. THE AREAS TO BE WELDED MAY BE MASKED AND UNPAINTED OR PAINTED WITH FIELD REMOVAL OF THE PRIME COAT OCCURRING PRIOR TO WELDING.

5. FOLLOWING COMPLETION OF ABRASIVE BLAST CLEANING OPERATIONS, THE CONTRACTOR SHALL PROCEED WITH INSTALLATION OF THE NEW STRUCTURAL STEEL SHAPES.

6. FOR BOLTED CONNECTIONS, THE SLIP-CRITICAL PRIME COAT MUST BE APPLIED TO THE BASE STEEL PRIOR TO INSTALLATION OF THE REPAIR STEEL SHAPES. ALL NEW STRUCTURAL REPAIR CONNECTION PLATES SHALL BE SHOP DRILLED AND USED AS TEMPLATES FOR DRILLING IN EXISTING BASE STEEL.

7. FOR WELDED CONNECTIONS, THE PRIME COAT MUST BE APPLIED TO THE BASE STEEL, EXCEPT THE WELDING AREA WHICH SHOULD BE MASKED OFF PRIOR TO WELDING OF THE REPAIR STEEL TO EXISTING STEEL.

8. PRIME COATING AREAS DAMAGED BY WELDING ARE TO BE CLEANED AND RECOATED WITH PRIMER. THE COST OF THE CLEANING AND RECOAT WORK IS TO BE INCLUDED IN THE COST OF THE APPLICABLE PAINTING ITEM.

9. FLASH RUSTING OR RE-RUSTING OF THE SURFACE IS UNACCEPTABLE AND REQUIRES ADDITIONAL BLAST CLEANING PRIOR TO PAINTING WHICH WILL NOT BE MEASURED FOR PAYMENT. CLEANED SURFACES SHALL BE ACCEPTED BY THE ENGINEER BEFORE ANY PAINTING. THE PRIME COAT SHALL BE APPLIED TO THE STEEL BEFORE THE END OF THE DAY THAT PREPARATION WAS PERFORMED AND BEFORE THE FORMATION OF ANY FLASH RUSTING OR RE-RUSTING OF THE STEEL.

10. AFTER THE NEW SHAPES ARE IN PLACE, COMPLETELY PRIMER COATED AND ACCEPTED, THE NEW PLATES SHALL BE COATED WITH THE SAME PAINT SYSTEM USED FOR THE EXISTING STEEL. THE CONTRACTOR IS TO ADHERE TO ALL INTER-COAT TIMES PRESCRIBED BY THE PAINT MANUFACTURER AND SCHEDULE THE REPAIR TRADES AND PAINTING TRADES ACCORDINGLY.

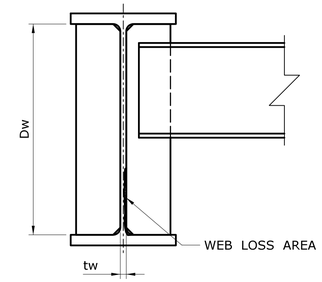

Aw = Dw X tw

IF $\frac{\text{WEB LOSS AREA}}{\text{Aw}}$ > 10%, REPAIR WEB

SECTION - BEAM END

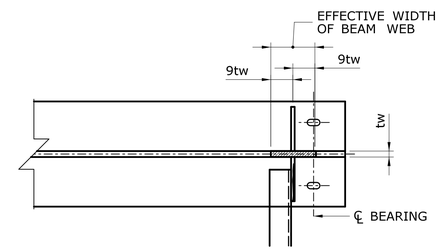

IF $\frac{\text{WEB LOSS AREA}}{\text{EFFECTIVE WEB AREA}}$ > 10%, REPAIR WEB

PLAN - BEAM END

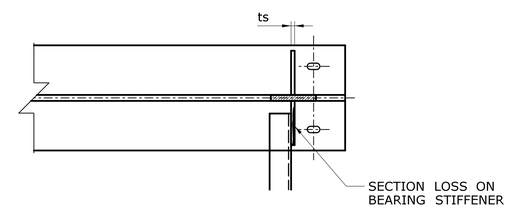

IF $\frac{\text{BEARING STIFFENER LOSS}}{\text{BEARING STIFFENER AREA}}$ > 20%, REPAIR STIFFENER

PLAN - BEARING STIFFENER

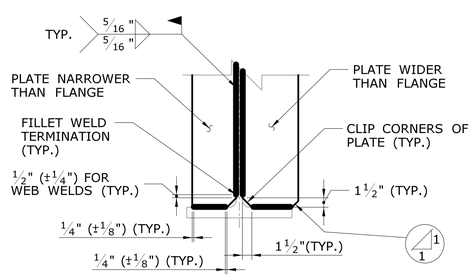

TYPICAL SECTION - ROLLED BEAMS

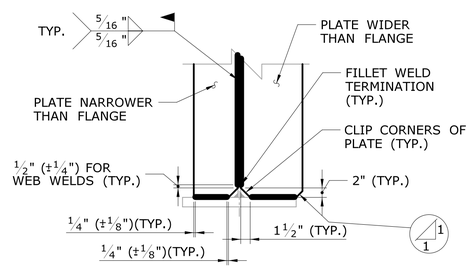

TYPICAL SECTION - PLATE GIRDERS

WELD TERMINATION DETAIL FOR CONNECTION PLATES AND BEARING STIFFENERS

DETAILS ARE SHOWN FOR BOTTOM FLANGE, TOP FLANGE IS SIMILAR.

REFERENCES:

1. SEE DWG. NOS. S-17 TO S-19 FOR STEEL REPAIR DETAILS.
2. SEE DWG. NOS. S-28, S-41, AND S-54 FOR STEEL REPAIR LOCATIONS.

REV.	DATE	REVISION DESCRIPTION	SHEET NO.

THE INFORMATION, INCLUDING ESTIMATED QUANTITIES OF WORK, SHOWN ON THESE SHEETS IS BASED ON LIMITED INVESTIGATIONS BY THE STATE AND IS IN NO WAY WARRANTED TO INDICATE THE CONDITIONS OF ACTUAL QUANTITIES OF WORK WHICH WILL BE REQUIRED.

Plotted Date: 8/8/2017

DESIGNER/DRAFTER: D.C./S.C.
CHECKED BY: J.H.M. II
SCALE: 1" = 1'-0"

STATE OF CONNECTICUT
DEPARTMENT OF TRANSPORTATION

Filename: ...\SB..MSH..0..174..402..S..16..STEEL..REPAIR..NOTES.dgn

SIGNATURE/BLOCK:
STATE OF CONNECTICUT JOHN H. MILLER III LICENSED PROFESSIONAL ENGINEER NO. 4142
Close, Jensen and Miller, P.C.
1137 Silas Deane Highway
Wethersfield, CT 06109

PROJECT TITLE: BEAM END REPAIR AND BEARING REPLACEMENT IN DISTRICT 4

TOWN: VARIOUS

DRAWING TITLE: GENERAL STEEL REPAIR NOTES

PROJECT NO. 174-402
DRAWING NO. S-16
SHEET NO. 03.16

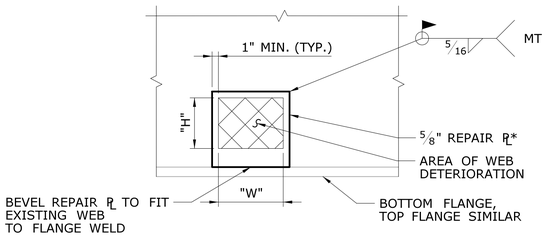

WEB REPAIR

SCALE: 1" = 1'-0"

W1

* 5/8" MIN. BUT NO LESS THAN THE THICKNESS OF THE ACTUAL EXISTING COMPONENT BEING REPAIRED

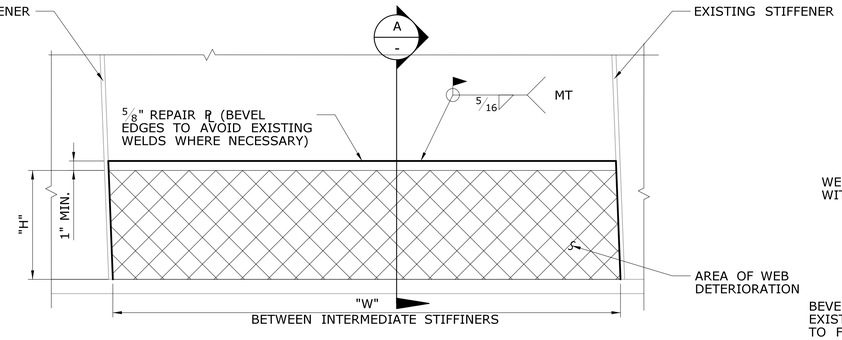

WEB REPAIR BETWEEN STIFFENERS

SCALE: 1 1/2" = 1'-0"

W2

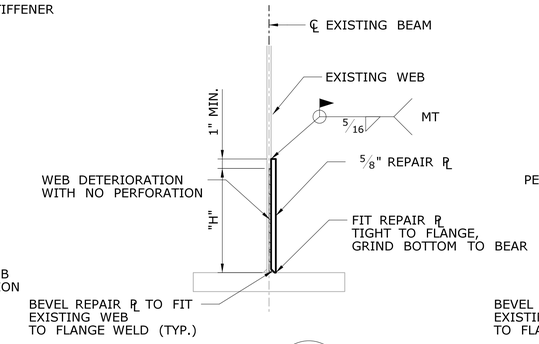

SECTION A -

SCALE: 1 1/2" = 1'-0"

WITHOUT PERFORATION

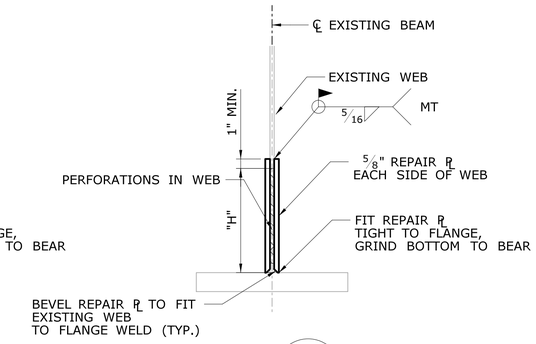

SECTION A -

SCALE: 1 1/2" = 1'-0"

WITH PERFORATION

"H" = VERTICAL LIMITS OF DETERIORATION (VARIES)
"W" = WIDTH OF DETERIORATION (VARIES)

= AREA LIMITS OF DETERIORATION

REFERENCES:

1. SEE DWG. NO. S-16 GENERAL FOR STEEL NOTES.
2. SEE DWG. NOS. S-28, S-41 AND S-54 FOR STEEL REPAIR LOCATIONS.

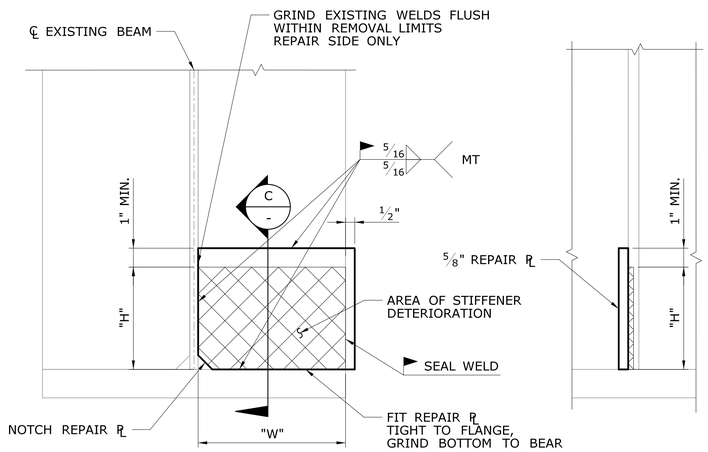

STIFFENER REPAIR

S1

SECTION C -

STIFFENER REPAIR DETAILS

SCALE: 3" = 1'-0"

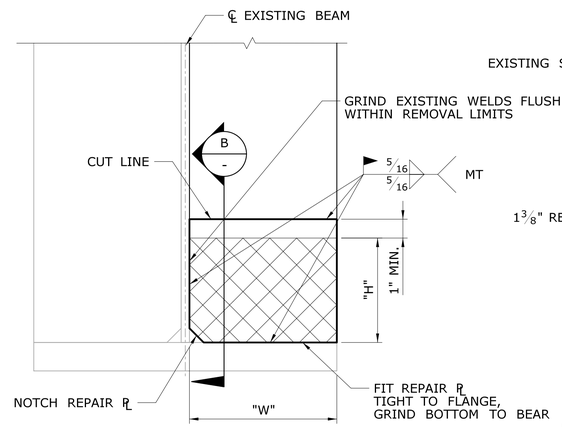

STIFFENER REPAIR

S2

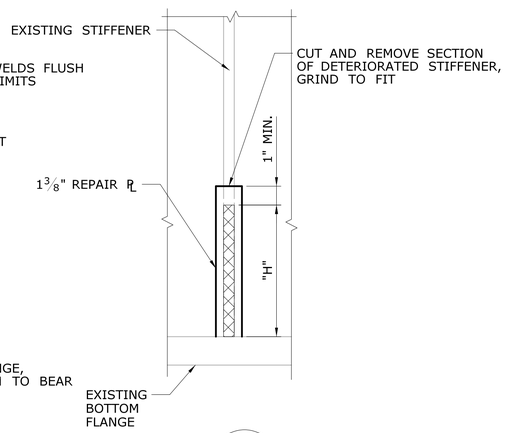

SECTION B -

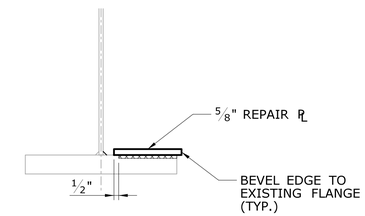

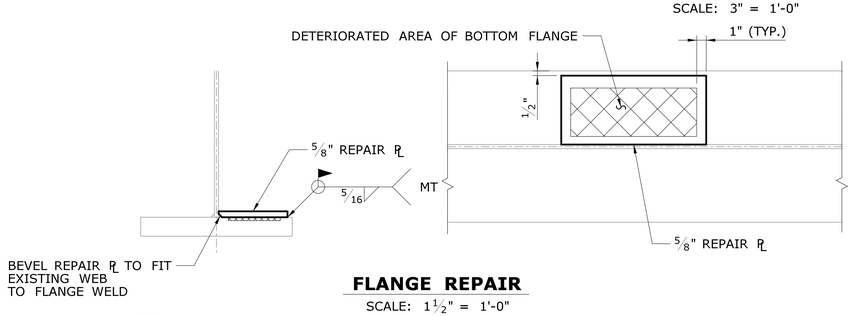

FLANGE REPAIR

SCALE: 1 1/2" = 1'-0"

F1 **(BOTTOM FLANGE SHOWN, TOP FLANGE SIMILAR)**

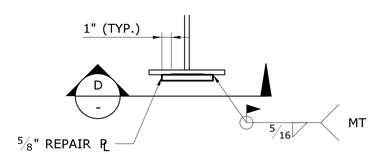

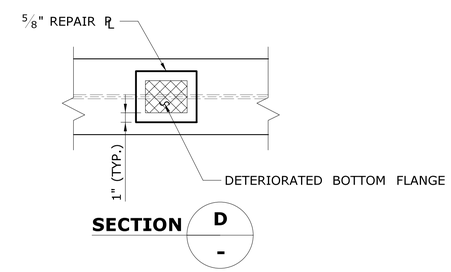

SECTION D -

BOTTOM FLANGE REPAIR

SCALE: 1 1/2" = 1'-0"

F2

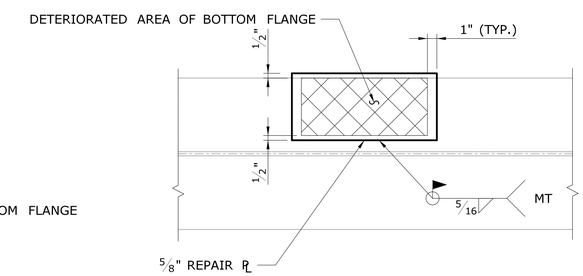

FLANGE REPAIR

SCALE: 1 1/2" = 1'-0"

F3 **(BOTTOM FLANGE SHOWN, TOP FLANGE SIMILAR)**

WELDED STEEL REPAIR DETAILS

REV.	DATE	REVISION DESCRIPTION	SHEET NO.

THE INFORMATION, INCLUDING ESTIMATED QUANTITIES OF WORK, SHOWN ON THESE SHEETS IS BASED ON LIMITED INVESTIGATIONS BY THE STATE AND IS IN NO WAY WARRANTED TO INDICATE THE CONDITIONS OF ACTUAL QUANTITIES OF WORK WHICH WILL BE REQUIRED.

Plotted Date: 8/8/2017

DESIGNER/DRAFTER: D.C./S.C.
CHECKED BY: J.H.M. II
SCALE AS NOTED

STATE OF CONNECTICUT
DEPARTMENT OF TRANSPORTATION

Filename: ...\SB_MSH_0_174_402_S_17_STEEL_REPAIR_1.dgn

SIGNATURE/BLOCK:
Close, Jensen and Miller, P.C.
1137 Silas Deane Highway
Wethersfield, CT 06109

PROJECT TITLE:
BEAM END REPAIR AND BEARING REPLACEMENT IN DISTRICT 4

TOWN: **VARIOUS**

DRAWING TITLE: **STEEL REPAIR DETAILS - 1**

PROJECT NO. 174-402
DRAWING NO. S-17
SHEET NO. 03.17

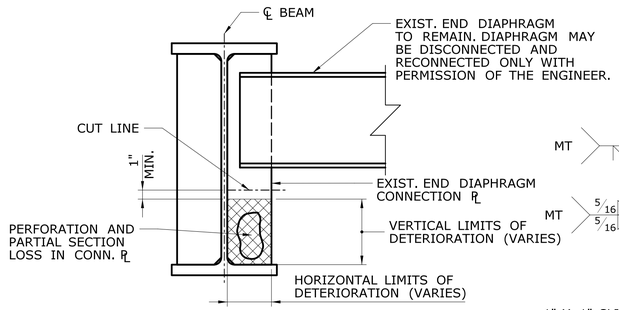

EXISTING CONDITION - CROSS SECTION

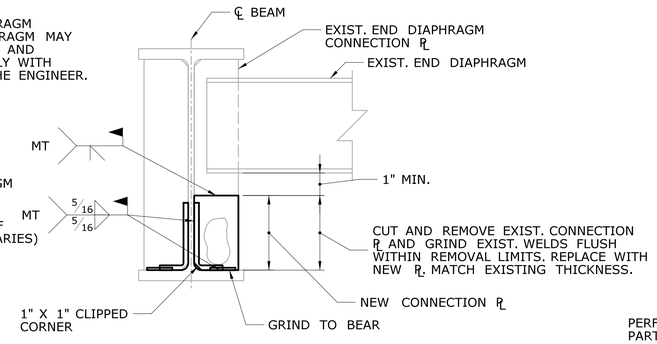

PROPOSED REPAIR - CROSS SECTION

END DIAPHRAGM CONNECTION PLATE OR BEARING STIFFENER REPAIR

SCALE: 1" = 1'-0"

S3

"H" = VERTICAL LIMITS OF DETERIORATION (VARIES)
"W" = WIDTH OF DETERIORATION (VARIES)

= AREA LIMITS OF DETERIORATION

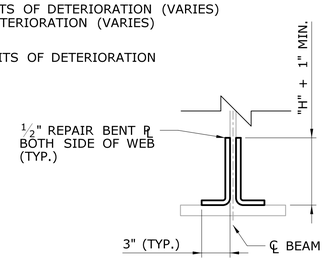

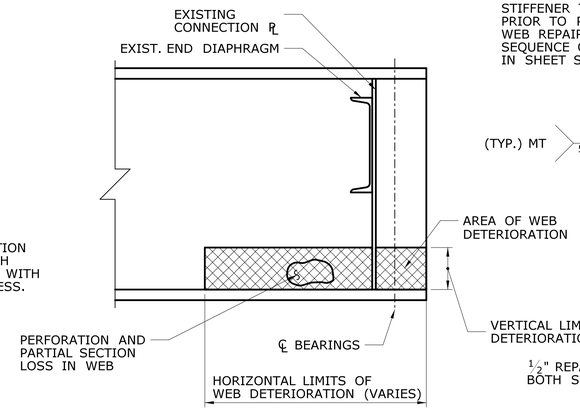

EXISTING CONDITION - ELEVATION

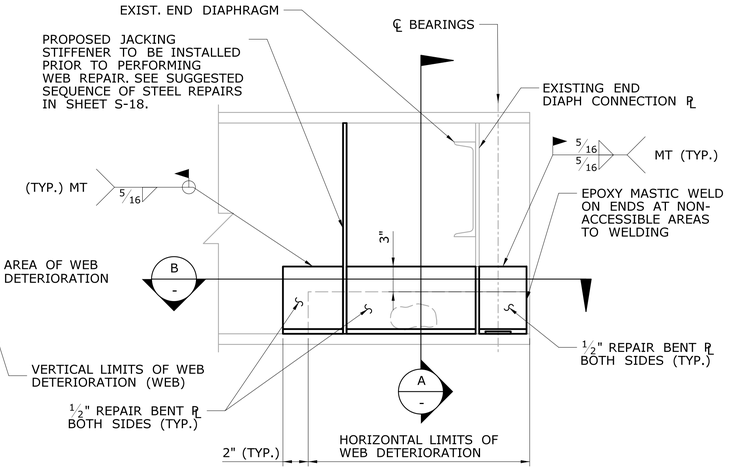

PROPOSED REPAIR - ELEVATION

WEB REPAIR AT BEARING

SCALE: 1" = 1'-0"

W3

NOTES:

1. THE BEAM END SHALL BE SLIGHTLY JACKED UP TO RELIEVE THE REACTION LOAD WHILE PERFORMING THE WEB AND BEARING STIFFENER REPAIR WORK, THE COST OF JACKING SYSTEM SHALL BE PAID FOR UNDER THE ITEM "JACKING EXISTING BEAMS" WHERE APPLICABLE.
2. THE COST OF REMOVING DETERIORATED STEEL, DISCONNECT AND RECONNECT EXISTING CROSS FRAME, FURNISHING AND INSTALLING NEW STEEL SHALL BE PAID FOR UNDER THE ITEM "STRUCTURAL STEEL REPAIRS (SITE NO. X)."

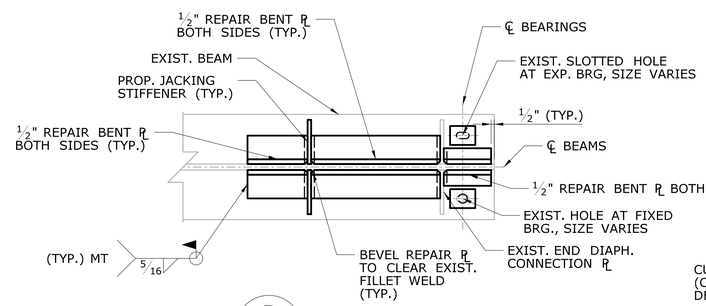

B - SECTION

SCALE: 1" = 1'-0"

REFERENCES:

1. SEE DWG. NO. S-16 GENERAL FOR STEEL NOTES.
2. SEE DWG. NOS. S-28, S-41 AND S-54 FOR STEEL REPAIR LOCATIONS.

A - SECTION

SCALE: 1 1/2" = 1'-0"

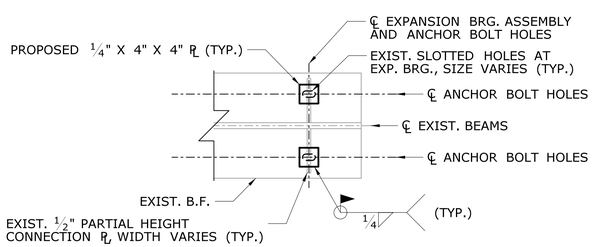

ANCHOR BOLT HOLE COVER PLATE

SCALE: 1" = 1'-0"

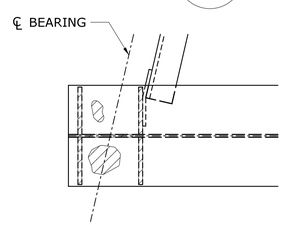

C - SECTION

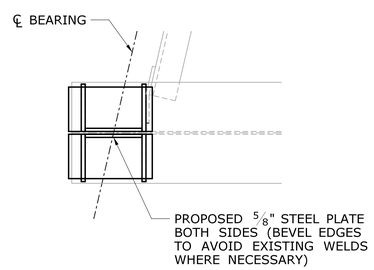

D - SECTION

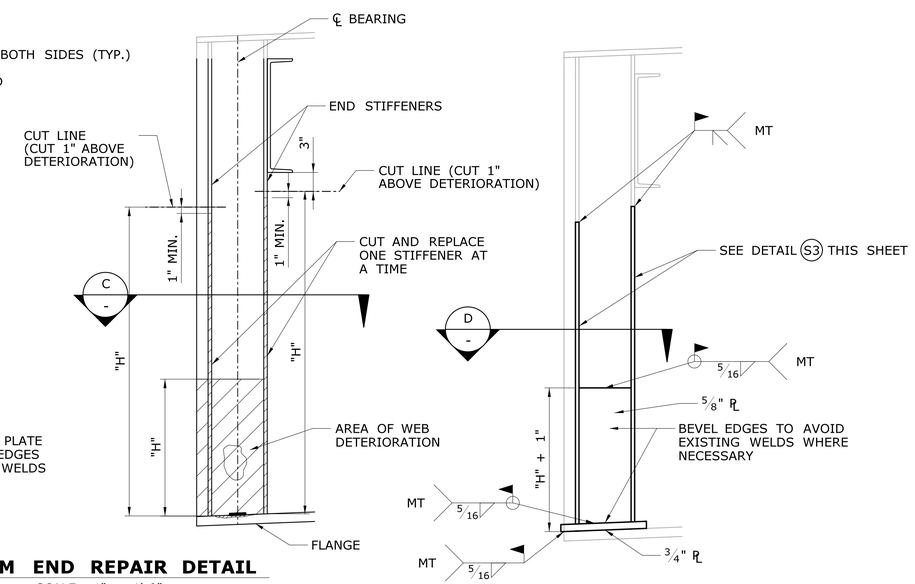

BEAM END REPAIR DETAIL

SCALE: 1" = 1'-0"

S4

REV.	DATE	REVISION DESCRIPTION	SHEET NO.

THE INFORMATION, INCLUDING ESTIMATED QUANTITIES OF WORK, SHOWN ON THESE SHEETS IS BASED ON LIMITED INVESTIGATIONS BY THE STATE AND IS IN NO WAY WARRANTED TO INDICATE THE CONDITIONS OF ACTUAL QUANTITIES OF WORK WHICH WILL BE REQUIRED.

Plotted Date: 8/8/2017

DESIGNER/DRAFTER: D.C./S.C.
CHECKED BY: J.H.M. II
SCALE AS NOTED

STATE OF CONNECTICUT
DEPARTMENT OF TRANSPORTATION

Filename: ...\SB_MSH_0_174_402_S_18_STEEL_REPAIR_2.dgn

SIGNATURE/BLOCK:
Close, Jensen and Miller, P.C.
1137 Silas Deane Highway
Wethersfield, CT 06109

PROJECT TITLE:
BEAM END REPAIR AND BEARING REPLACEMENT IN DISTRICT 4

TOWN: **VARIOUS**

DRAWING TITLE: **STEEL REPAIR DETAILS - 2**

PROJECT NO. 174-402
DRAWING NO. S-18
SHEET NO. 03.18

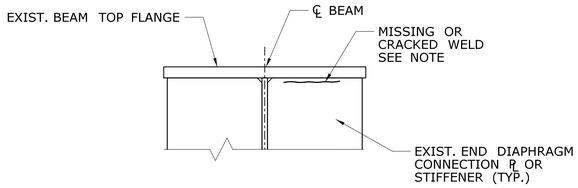

EXISTING CONDITION

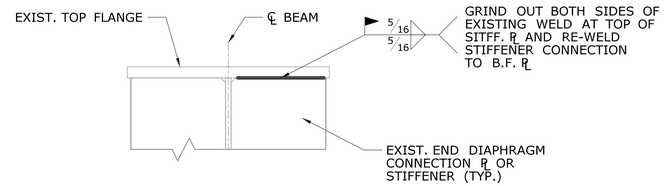

PROPOSED REPAIR

END DIAPHRAGM CONNECTION PLATE TOP FLANGE WELD REPAIR

SCALE: 3" = 1'-0"

C1

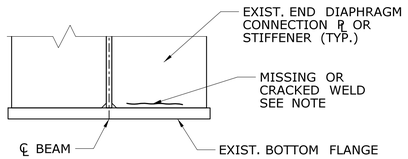

EXISTING CONDITION

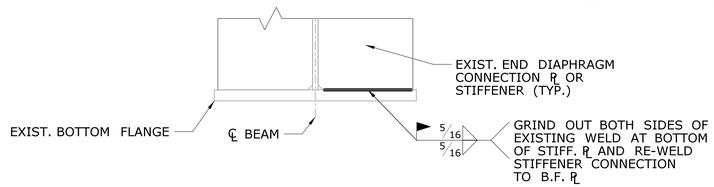

PROPOSED REPAIR

END DIAPHRAGM CONNECTION PLATE BOTTOM FLANGE WELD REPAIR

SCALE: 3" = 1'-0"

C2

NOTE:

EXISTING CRACK WELDS ARE TO BE REMOVED AND BASE METAL MAGNETIC PARTICLE TESTED FOR CRACKS PRIOR TO REWELDING. PAINTING REQUIRED IF NOT WITHIN PAINTING LIMITS AND TO BE PAID UNDER THE ITEM "LOCALIZED PAINT REMOVAL AND FIELD PAINTING OF EXISTING STEEL."

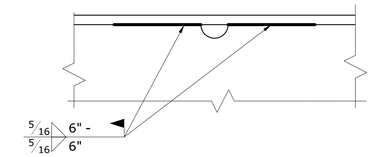

WELD REPAIR AT COPE HOLE

SCALE: 3" = 1'-0"

C4

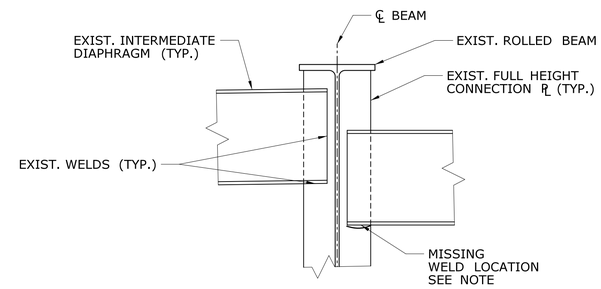

EXISTING CONDITION

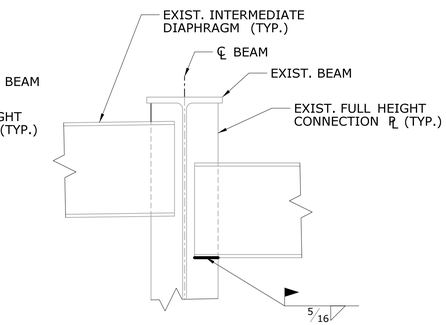

PROPOSED REPAIR

INTERMEDIATE DIAPHRAGM TO CONNECTION PLATE HORIZONTAL WELD REPAIR

SCALE: 1½" = 1'-0"

C5

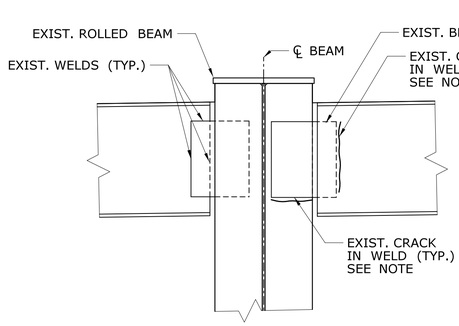

EXISTING CONDITION

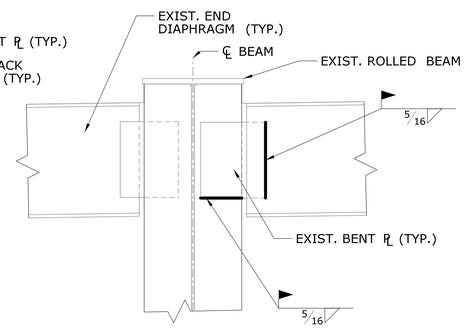

PROPOSED REPAIR

END DIAPHRAGM TO BENT PLATE WELD REPAIR

SCALE: 1½" = 1'-0"

C3

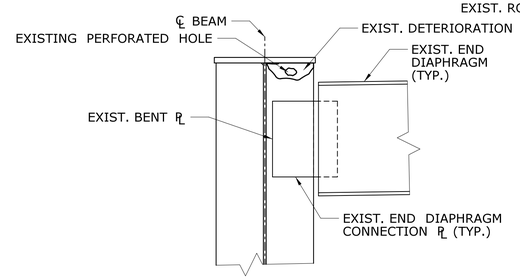

EXISTING CONDITION

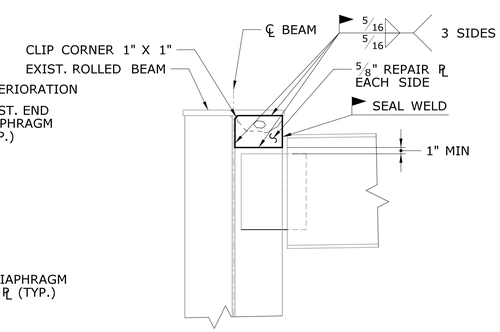

PROPOSED REPAIR

END DIAPHRAGM TOP OF CONNECTION PLATE REPAIR

SCALE: 1½" = 1'-0"

C6

NOTE:

FOR NOTES AND SEQUENCE OF CONSTRUCTION SEE DWG. NO. 15.

REFERENCES:

1. SEE DWG. NO. S-16 FOR GENERAL STEEL REPAIR NOTES.
2. SEE DWG. NOS. S-28, S-41 AND S-54 FOR STEEL REPAIR LOCATIONS.

REV.	DATE	REVISION DESCRIPTION	SHEET NO.

THE INFORMATION, INCLUDING ESTIMATED QUANTITIES OF WORK, SHOWN ON THESE SHEETS IS BASED ON LIMITED INVESTIGATIONS BY THE STATE AND IS IN NO WAY WARRANTED TO INDICATE THE CONDITIONS OF ACTUAL QUANTITIES OF WORK WHICH WILL BE REQUIRED.

Plotted Date: 8/8/2017

DESIGNER/DRAFTER: D.C./S.C.

CHECKED BY: J.H.M. II

SCALE AS NOTED

STATE OF CONNECTICUT
DEPARTMENT OF TRANSPORTATION

Filename: ...\SB_MSH_0_174_402_S_19_STEEL_REPAIR_3.dgn

SIGNATURE/BLOCK:

Close, Jensen and Miller, P.C.
1137 Silas Deane Highway
Wethersfield, CT 06109

PROJECT TITLE:

BEAM END REPAIR AND BEARING REPLACEMENT IN DISTRICT 4

TOWN: **VARIOUS**

DRAWING TITLE: **STEEL REPAIR DETAILS - 3**

PROJECT NO. **174-402**

DRAWING NO. **S-19**

SHEET NO. **03.19**

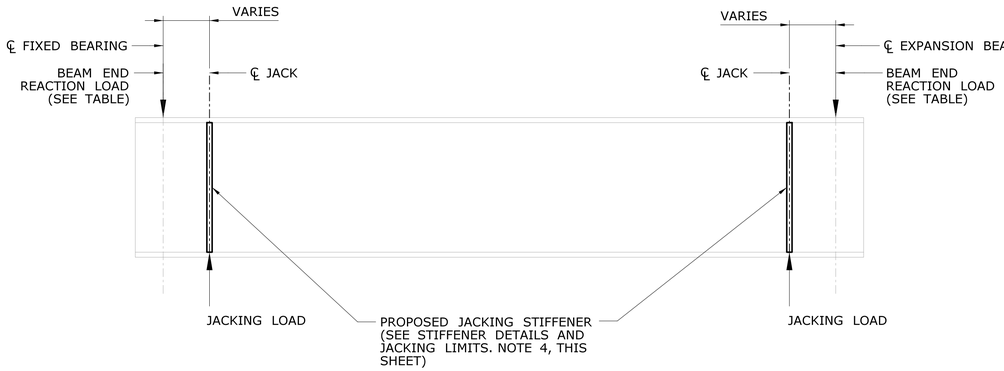

BEAM JACKING LOAD DETAIL

NOT TO SCALE

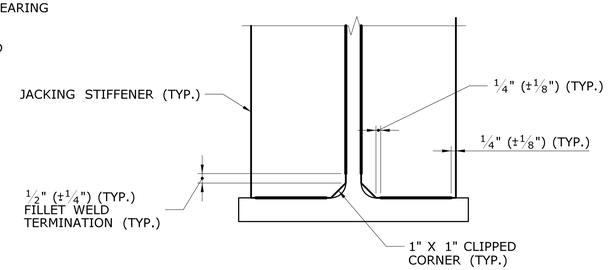

WELD TERMINATION DETAIL

NOT TO SCALE

A
-

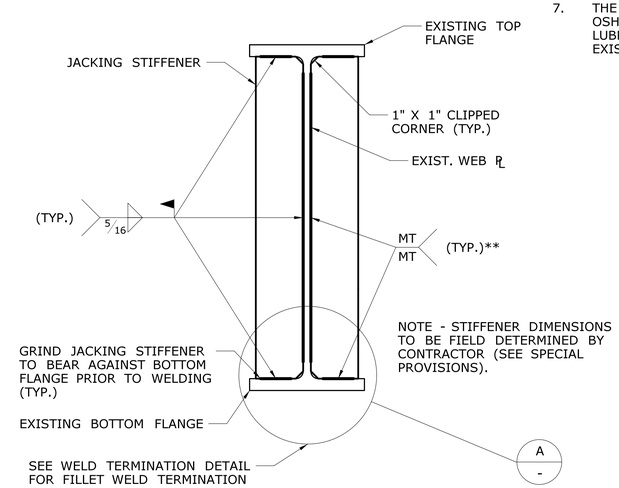

JACKING STIFFENER DETAIL (TYP.)

NOT TO SCALE

JACKING LOADS FOR CLEAN AND LUBRICATE EXISTING BEARINGS

MAXIMUM CT-P200 UNFACTORED LIVE LOAD + IMPACT

	BRIDGE NO. 00468		BRIDGE NO. 01154		BRIDGE NO. 01161	
	BRG1 (L)	BRG2 (R)	BRG1 (L)	BRG2 (R)	BRG1 (L)	BRG2 (R)
ABUT 1	-	113.32	-	151.6	-	159.79
PIER 1	129.56	136.16	152.22	235.79	159.83	232.32
PIER 2	-	-	237.23	229.43	228.58	232.32
PIER 3	-	-	233.28	110.71	228.58	106.65
ABUT 2	136.17	-	111.07	-	105.16	-

**ALL WEB-TO-JACKING STIFFENER AND JACKING STIFFENER-TO-FLANGE FILLET WELDS SHALL BE INSPECTED BY THE MAGNETIC PARTICLE METHOD.

REFERENCE:

1. SEE DWG. NOS. S-21, S-38 AND S-52 FOR BEARING LOCATIONS.

*NOTE:
MAXIMUM BEAM END REACTION LOAD CALCULATED DL+(LL+I)

UNFACTORED JACKING LOADS ARE TAKEN AT THE EXISTING EXPANSION BEARING LOCATIONS FOR EACH BEAM. JACKING LOADS SHALL NOT EXCEED 50% OF THE LOAD CAPACITY OF THE JACKS. REACTIONS ARE BASED ON ASSUMING UNIFORM JACKING OF ALL BEAMS AT A SUBSTRUCTURE UNIT. ACTUAL JACKING FORCES MAY BE LARGER THAN THE BEAM REACTION SHOWN.

JACKING LIMITS:

1. MAXIMUM JACKING LIMIT IS 3/16" WHEN A SERIES OF ADJACENT BEARINGS ARE BEING JACKED, WITH MAXIMUM DIFFERENTIAL DISPLACEMENT OF 1/8" BETWEEN ADJACENT BEARINGS.
2. WHEN ONLY ONE BEARING IS BEING JACKED, MAXIMUM JACKING LIMIT IS 1/8".
3. JACKING OPERATIONS CAN BE PERFORMED UNDER LIVE LOAD TRAFFIC. THE CONTRACTOR SHALL DESIGN THE JACKING SUPPORT STRUCTURE FOR THE SPECIFIED BEAM END REACTIONS TABULATED ON THIS SHEET. THE CONTRACTOR MUST ENSURE THAT TRAVEL LANES ARE OPEN TO TRAFFIC IN ACCORDANCE WITH THE SPECIAL PROVISIONS "PROSECUTION AND PROGRESS".
4. THE CONTRACTOR SHALL PREPARE AND SUBMIT A WORKING DRAWING DESIGN OF HIS INTENDED MEANS AND METHODS OF JACKING FOR EACH LOCATION BASED ON THE REACTION LOADS AND INFORMATION CONTAINED IN THE PLANS AND CONTRACT DOCUMENTS. THE CONTRACTOR SHALL DETERMINE IF STIFFENERS ARE REQUIRED. THE DESIGN AND CONSTRUCTION OF SUPPLEMENTAL STRUCTURAL ELEMENTS (INCLUDING STIFFENERS) TO STRENGTHEN EXISTING MEMBERS PRIOR TO JACKING IS INCLUDED FOR PAYMENT UNDER THE ITEM "JACKING EXISTING BEAMS" (SEE SPECIAL PROVISIONS).
5. ALL BEAMS ALONG A SINGLE SUBSTRUCTURE UNIT SHALL BE JACKED SIMULTANEOUSLY DURING LIFTING OPERATIONS.
6. THE CONTRACTOR IS ADVISED THAT EXISTING UTILITIES, CONDUITS AND WIRES ATTACHED TO THE UNDERSIDE OF THE SUPERSTRUCTURE AND FACE OF THE SUBSTRUCTURE MAY BE WITHIN THE LIMITS OF THE JACKING OPERATIONS. ALL WORK SHALL BE COORDINATED WITH THE APPLICABLE UTILITY COMPANIES.

JACKING ASSEMBLY NOTES:

1. JACKS SHALL BE PLACED AS CLOSE TO THE CENTERLINE OF BEARINGS AS POSSIBLE.
2. THE ACTUAL MEANS AND METHODS OF JACKING SHALL BE DETERMINED BY THE CONTRACTOR AND APPROVED BY THE ENGINEER.
3. JACKING ASSEMBLIES, INCLUDING ANY STIFFENERS, BRACKETS AND OTHER TEMPORARY DEVICES NECESSARY TO THE LIFT ARE TO BE DESIGNED, CONSTRUCTED AND REMOVED BY THE CONTRACTOR. WORK PLATFORMS, INCLUDING OSHA COMPLIANT RAILING AND MEANS OF ACCESS, SHALL ALSO BE DESIGNED, CONSTRUCTED AND REMOVED BY THE CONTRACTOR. THE CONTRACTOR SHALL SUBMIT WORKING DRAWINGS AND COMPUTATIONS PREPARED, SIGNED & SEALED BY AN ENGINEER LICENSED IN THE STATE OF CONNECTICUT, TO THE ENGINEER FOR REVIEW AND APPROVAL.
4. THE CONTRACTOR SHALL DESIGN JACKING BRACKET ASSEMBLIES FOR THE LOADS SPECIFIED IN THE JACKING LOADS TABLE.
5. PROPOSED STIFFENERS ARE TO BE LEFT IN PLACE. NOTE THAT PAINTING STIFFENERS AND AREAS OF PAINT REMOVAL SHALL BE PAID FOR UNDER THE ITEM "LOCALIZED PAINT REMOVAL AND FIELD PAINTING OF EXISTING STEEL" UNLESS THE AREA IS TO BE PAINTED UNDER THE ITEM "ABRASIVE BLAST CLEANING AND FIELD PAINTING OF BEAM ENDS (SITE NO. X)" OR "ABRASIVE BLAST CLEANING AND FIELD PAINTING FOR STRUCTURE (SITE NO. X)" IN WHICH CASE THERE WILL BE NO SEPARATE MEASURE OF PAYMENT FOR THIS WORK.
6. PAINTING OF SUPPLEMENTAL STRENGTHENING MEMBERS PROPOSED BY THE CONTRACTOR FOR JACKING WILL NOT BE MEASURED FOR PAYMENT. FINAL PAINTING WORK SHALL BE PERFORMED AFTER THE JACKING WORK HAS BEEN COMPLETED.
7. THE DESIGN, FURNISHING, INSTALLATION AND REMOVAL OF JACKING ASSEMBLIES, OSHA COMPLIANT JACKING WORK PLATFORM AND RAILING FOR THE CLEANING AND LUBRICATION OF EXISTING BEARINGS SHALL BE PAID FOR UNDER THE ITEM "JACKING EXISTING BEAMS", SEE SPECIAL PROVISIONS.

SEQUENCE OF OPERATIONS FOR CLEAN AND LUBRICATE EXISTING BEARINGS:

1. ASSEMBLE THE WORK PLATFORM AS DESIGNED BY THE CONTRACTOR.
2. STRENGTHEN GIRDERS AS REQUIRED WITH JACKING STIFFENERS. (PAID FOR UNDER THE ITEM "JACKING EXISTING BEAMS").
3. ASSEMBLE THE JACKING ASSEMBLIES.
4. JACK ENTIRE LINE OF BEARINGS. CONTRACTOR SHALL JACK UNTIL MAXIMUM ALLOWABLE CLEARANCE IS PROVIDED BETWEEN THE STEEL SOLE PLATE AND THE BRONZE BEARING PLATE FOR LUBRICATION OF THE SURFACES, AND BETWEEN THE BRONZE BEARING PLATE AND THE MASONRY PLATE.
5. CONTRACTOR SHALL MECHANICALLY CLEAN SLIDING SURFACES OF EXISTING BEARINGS (SEE SPECIAL PROVISIONS "JACKING EXISTING BEAMS").
6. BEARINGS SHALL BE CLEANED AND LUBRICATED ONLY AT ONE SUBSTRUCTURE UNIT AT ANY GIVEN TIME. THE CONTRACTOR WILL BE REQUIRED TO JACK ALL GIRDERS WITHIN THE STAGE LIMITS OF CONSTRUCTION SIMULTANEOUSLY ALONG A SUBSTRUCTURE UNIT.
7. AFTER THESE SURFACES HAVE BEEN MECHANICALLY CLEANED AND REMNANT RUST REMOVED WITH HIGH PRESSURE AIR, LUBRICATE SURFACES WITH SYNTHETIC GREASE.
8. RESET BEARINGS AND PAINT AREAS INDICATED IN DETAILS. PAINTING TO BE PAID FOR UNDER THE ITEM "LOCALIZED PAINT REMOVAL AND FIELD PAINTING OF EXISTING STEEL" UNLESS THE AREA IS TO BE PAINTED UNDER THE ITEM "ABRASIVE BLAST CLEANING AND FIELD PAINTING OF BEAM ENDS (SITE NO. X)" OR "ABRASIVE BLAST CLEANING AND FIELD PAINTING OF STRUCTURE (SITE NO. X)". THERE WILL BE NO SEPARATE MEASURE FOR PAYMENT FOR PAINTING THE STIFFENERS.
9. EXISTING BEARINGS TO BE CLEANED AND LUBRICATED ARE SHOWN ON THE FRAMING PLANS AND INDICATED IN THE JACKING LOADS TABLE.
10. JACKING EXISTING BEARINGS FOR CLEAN AND LUBRICATE EXISTING BEARINGS TO REMAIN SHALL BE PAID FOR UNDER THE ITEM "JACKING EXISTING BEAMS".

NOTICE TO THE CONTRACTOR:

PRIOR TO ANY CONSTRUCTION, THE CONTRACTOR IS RESPONSIBLE FOR LOCATING ALL THE SUBSTRUCTURES AND UTILITIES WITHIN THE WORKING AREA. PLACE AND LIMIT CONSTRUCTION EQUIPMENT, CONSTRUCTION LOADS, AND/OR SURCHARGES IN THE VICINITY OF THE IDENTIFIED SUBSTRUCTURES AND UTILITIES SUCH THAT THE SUBSTRUCTURES AND UTILITIES ARE NOT DAMAGED DUE TO THE CONSTRUCTION ACTIVITIES. MONITOR AND CONTROL VIBRATIONS AND POTENTIAL MOVEMENTS CAUSED BY ANY CONSTRUCTION ACTIVITIES TO AVOID DAMAGES TO THE ADJACENT SUBSTRUCTURES AND UTILITIES. DAMAGES TO ANY SUBSTRUCTURES AND UTILITIES SHALL BE REPAIRED BY THE CONTRACTOR AT NO ADDITIONAL COST TO THE STATE.

REV.	DATE	REVISION DESCRIPTION	SHEET NO.

THE INFORMATION, INCLUDING ESTIMATED QUANTITIES OF WORK, SHOWN ON THESE SHEETS IS BASED ON LIMITED INVESTIGATIONS BY THE STATE AND IS IN NO WAY WARRANTED TO INDICATE THE CONDITIONS OF ACTUAL QUANTITIES OF WORK WHICH WILL BE REQUIRED.

Plotted Date: 8/8/2017

DESIGNER/DRAFTER: D.C./S.C.
CHECKED BY: J.H.M. II
SCALE AS NOTED

STATE OF CONNECTICUT
DEPARTMENT OF TRANSPORTATION

Filename: ...\SB_MSH_0_174_402_S_20_JACKING.dgn

SIGNATURE/BLOCK:
Close, Jensen and Miller, P.C.
1137 Silas Deane Highway
Wethersfield, CT 06109

PROJECT TITLE:
BEAM END REPAIR AND BEARING REPLACEMENT IN DISTRICT 4

TOWN: VARIOUS

DRAWING TITLE: JACKING DETAILS

PROJECT NO. 174-402
DRAWING NO. S-20
SHEET NO. 03.20

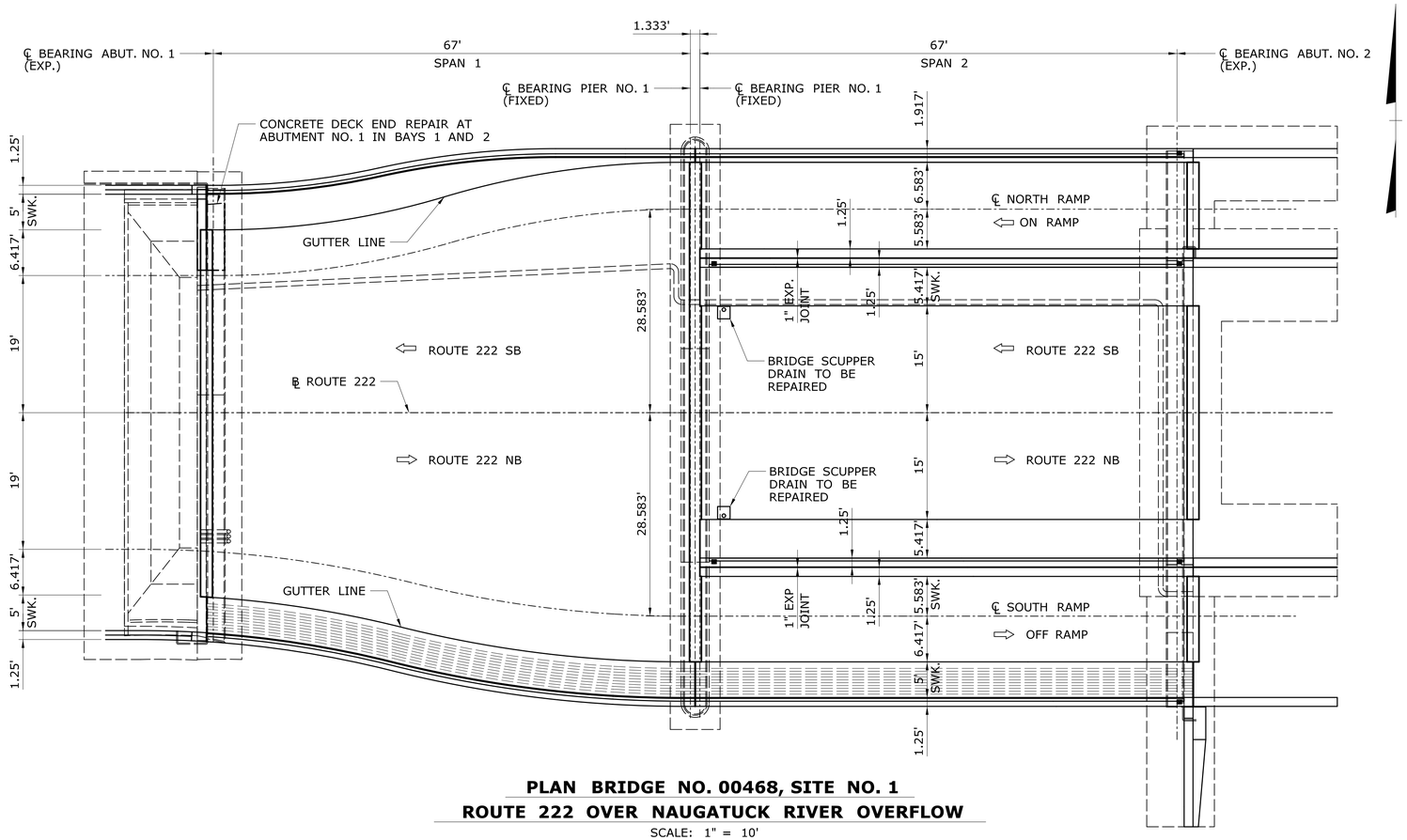

PLAN BRIDGE NO. 00468, SITE NO. 1
ROUTE 222 OVER NAUGATUCK RIVER OVERFLOW

SCALE: 1" = 10'

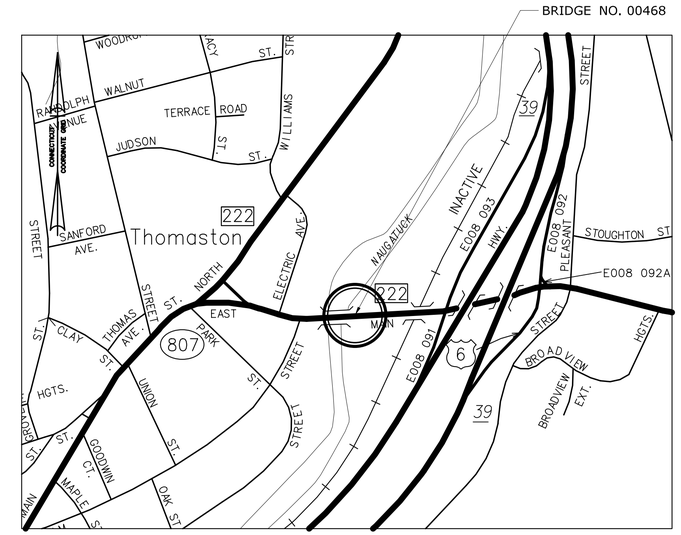

LOCATION MAP SITE NO. 1

SCALE: 1" = 2000'

GENERAL NOTES:

TRAFFIC: ALL WORK SHALL BE DONE IN ACCORDANCE WITH THE SPECIAL PROVISIONS, "MAINTENANCE AND PROTECTION OF TRAFFIC" & "PROSECUTION AND PROGRESS" AND "MPT PLANS".

ACCESS: THE CONTRACTOR'S ATTENTION SHALL BE MADE TO THE FACT THAT, THERE IS NO EASEMENT TO ACCESS UNDERNEATH THE BRIDGE UTILIZING THE PRIVATE ROADWAY. THE CONTRACTOR SHALL LOWER ALL EQUIPMENT NECESSARY TO WORK AREAS BENEATH THE BRIDGE FROM THE TOP.
THE CONTRACTOR SHALL PROVIDE ACCESS AND PROTECTION TO THE WORK AREAS BENEATH THE BRIDGE UTILIZING SCAFFOLDING, UNDER THE BRIDGE WORK PLATFORMS, SAFETY NETS, LADDERS AND UNDER BRIDGE INSPECTION EQUIPMENT AS REQUIRED. THIS WORK SHALL BE DESIGNED BY A PROFESSIONAL ENGINEER EMPLOYED BY THE CONTRACTOR. THE DESIGN SHALL BE IN ACCORDANCE WITH THE AASHTO GUIDE SPECIFICATION FOR BRIDGE TEMPORARY WORKS TO SUIT THE CONTRACTOR'S MEANS AND METHODS OF CONSTRUCTION. PAYMENT TO BE INCLUDED UNDER THE RESPECTIVE ITEM. SEE CONTRACT SPECIAL PROVISIONS FOR ADDITIONAL INFORMATION.

UTILITIES: THE CONTRACTOR SHALL VERIFY THE SIZE AND LOCATION OF ALL UTILITIES WITHIN THE PROJECT LIMITS PRIOR TO THE START OF CONSTRUCTION AND SHALL PROTECT ALL EXISTING UTILITIES LOCATED WITHIN THE VICINITY OF THE CONSTRUCTION SITE. THE CONTRACTOR SHALL TAKE NECESSARY PRECAUTIONS WHEN WORKING NEAR UTILITIES SO AS TO NOT DISTURB THEM OR PLACE ANY LOAD OR EQUIPMENT ON THEM. ALL UTILITY COMPANIES SHALL BE NOTIFIED 48 HOURS PRIOR TO ANY WORK AFFECTING CABLES, CONDUITS, OR OTHER UTILITIES. THE CONTRACTOR SHALL CONTACT UTILITY COMPANIES FOR INSPECTION OF THEIR FACILITIES BEFORE AND AFTER ANY JACKING OF THE BRIDGE.

ALL STEEL ELEMENTS WITHIN THE PAINTING LIMITS OF BEAM ENDS AT THE PIER, INCLUDING BEARING STIFFENERS, CONNECTION PLATES, END DIAPHRAGMS, AND ALL ELEMENTS OF BEARINGS, EXCLUDING BRONZE SURFACES, SHALL BE PAINTED.

PAINT REMOVAL AND PAINTING LIMITS OF BEAM ENDS AT THE PIER SHALL BE INCLUDED FOR PAYMENT UNDER THE ITEM "ABRASIVE BLAST CLEANING AND FIELD PAINTING OF BEAM ENDS (SITE NO. 1)"

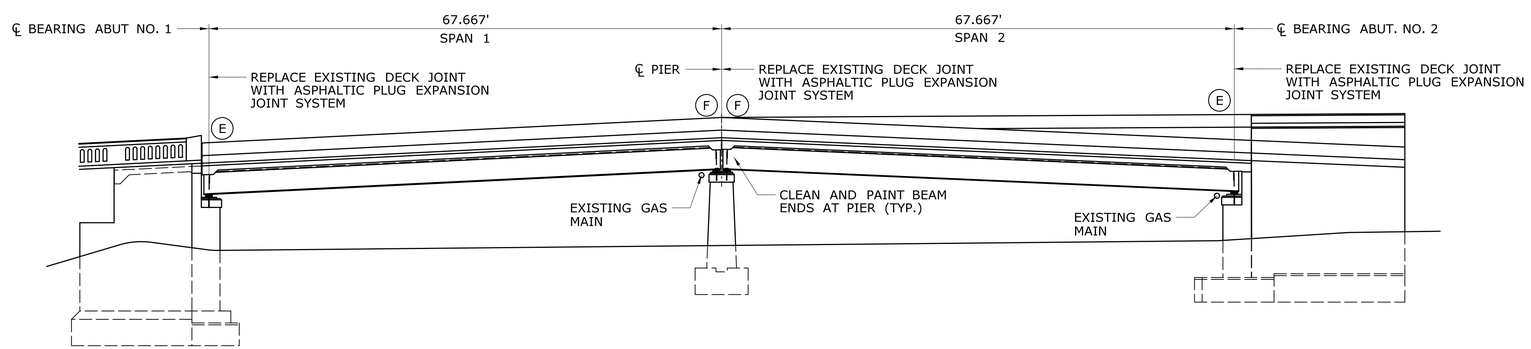

F FIXED BEARINGS

E EXPANSION BEARINGS

ELEVATION

SCALE: 1" = 10'

GENERAL DESCRIPTON OF WORK:

1. REPAIR DETERIORATED AREAS OF SUBSTRUCTURE.
2. REPAIR CONCRETE DECK END AT ABUT. NO. 1 BAYS 1 AND 2.
3. CLEAN AND PAINT BEAM ENDS AT PIER.
4. CLEAN, PAINT, AND REPAIR STRUCTURAL STEEL.
5. REPLACE ASPHALTIC PLUG JOINTS
6. REPAIR CONCRETE SIDEWALK AT JOINTS.
7. REPAIR SCUPPER DRAINS.
8. REPAIR RAILING SYSTEM.

REV.	DATE	REVISION DESCRIPTION	SHEET NO.

THE INFORMATION, INCLUDING ESTIMATED QUANTITIES OF WORK, SHOWN ON THESE SHEETS IS BASED ON LIMITED INVESTIGATIONS BY THE STATE AND IS IN NO WAY WARRANTED TO INDICATE THE CONDITIONS OF ACTUAL QUANTITIES OF WORK WHICH WILL BE REQUIRED.

Plotted Date: 8/8/2017

DESIGNER/DRAFTER: D.C./S.C.
CHECKED BY: J.H.M. II
SCALE AS NOTED

STATE OF CONNECTICUT
DEPARTMENT OF TRANSPORTATION

Filename: ...\SB_MSH_1_174_402_BR_00468_S_21_GEN_PLAN.dgn

SIGNATURE/BLOCK:
Close, Jensen and Miller, P.C.
1137 Silas Deane Highway
Wethersfield, CT 06109

PROJECT TITLE:
BEAM END REPAIR AND BEARING REPLACEMENT IN DISTRICT 4

TOWN: **THOMASTON**

DRAWING TITLE: **GENERAL PLAN BRIDGE NO. 00468**

PROJECT NO. **174-402**
DRAWING NO. **S-21**
SHEET NO. **03.21**

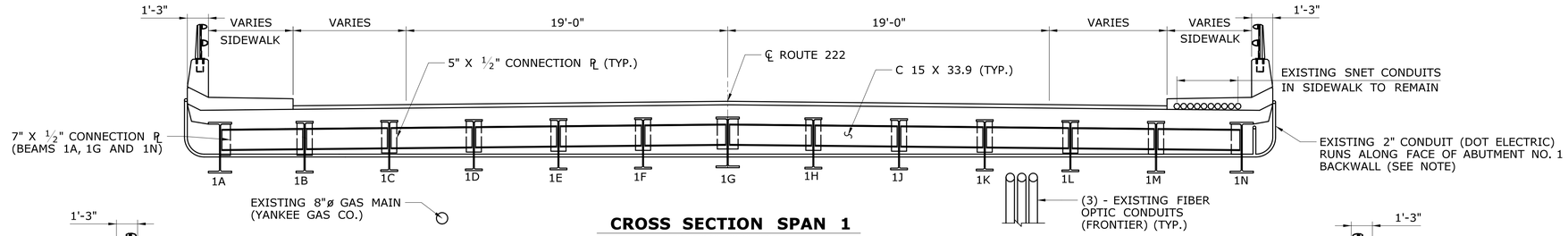

CROSS SECTION SPAN 1
AT ABUTMENT 1

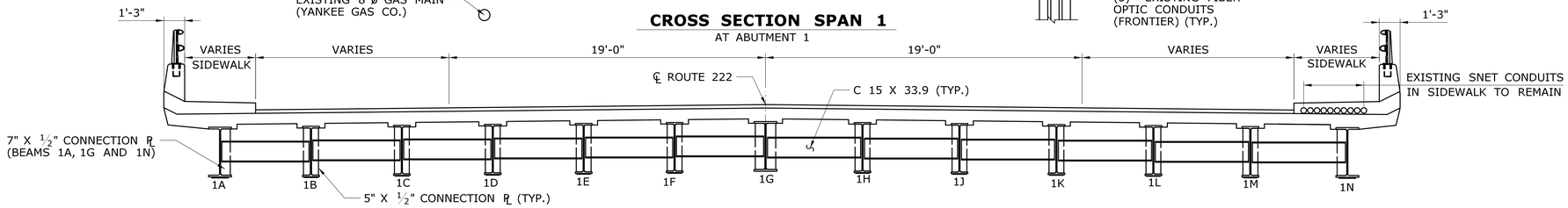

CROSS SECTION SPAN 1
AT MIDSPAN

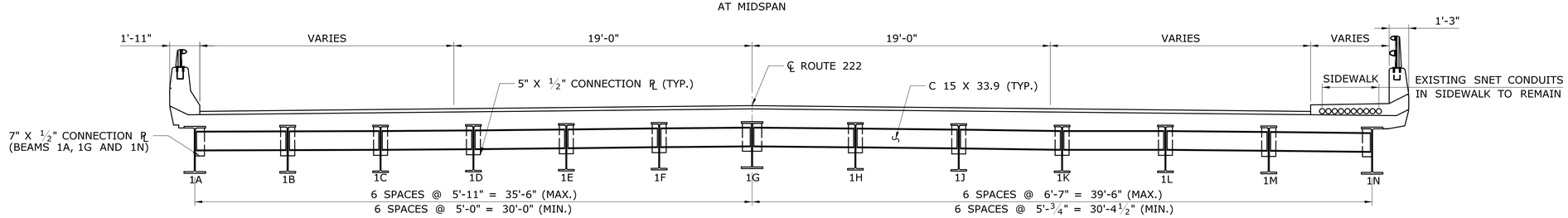

CROSS SECTION SPAN 1
AT PIER

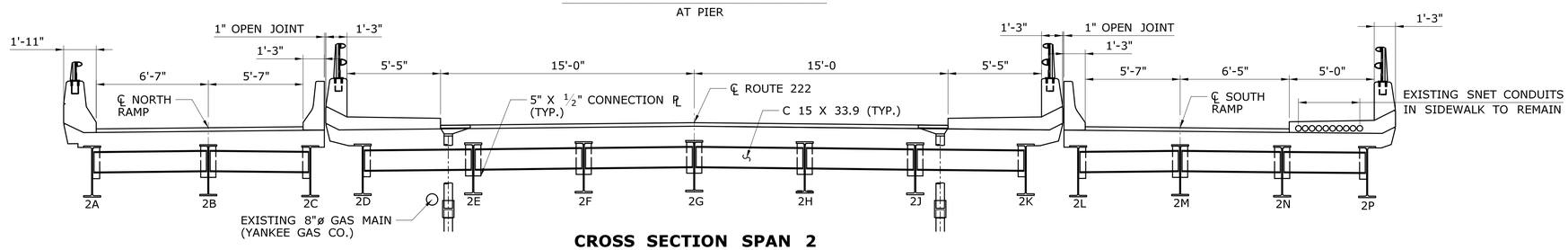

CROSS SECTION SPAN 2
AT PIER

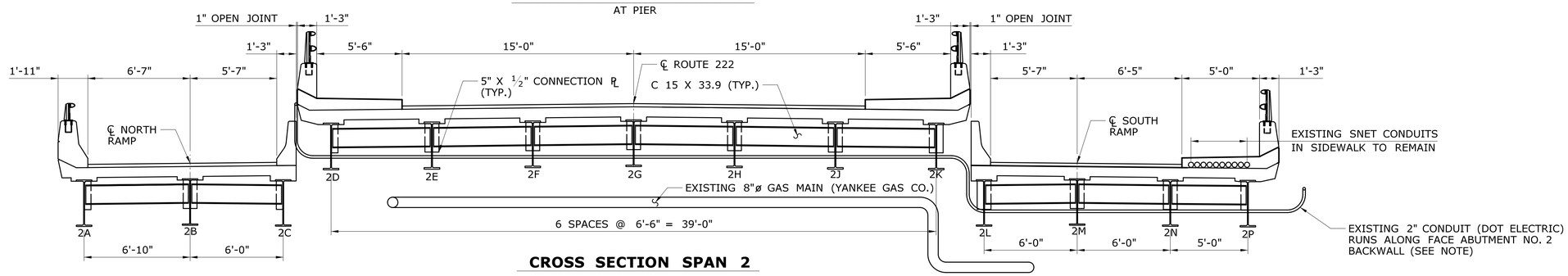

CROSS SECTION SPAN 2
AT ABUTMENT 2

NOTE:

2" RMC LOCATED ON THE FACE OF ABUTMENT NO. 1 BACKWALL SHALL TO BE TEMPORARILY SUPPORTED DURING DECK AND BACKWALL RECONSTRUCTION. THIS WORK SHALL BE PAID UNDER THE ITEM "PROTECTION AND SUPPORT OF EXISTING UTILITIES".

REV.	DATE	REVISION DESCRIPTION	SHEET NO.

THE INFORMATION, INCLUDING ESTIMATED QUANTITIES OF WORK, SHOWN ON THESE SHEETS IS BASED ON LIMITED INVESTIGATIONS BY THE STATE AND IS IN NO WAY WARRANTED TO INDICATE THE CONDITIONS OF ACTUAL QUANTITIES OF WORK WHICH WILL BE REQUIRED.

Plotted Date: 8/8/2017

DESIGNER/DRAFTER: D.C./S.C.
CHECKED BY: J.H.M. II
SCALE: ¼" = 1'-0"

STATE OF CONNECTICUT
DEPARTMENT OF TRANSPORTATION

Filename: ...\SB_MSH_1_174_402_BR_00468_S_22_SECTIONS.dgn

SIGNATURE/BLOCK:
Close, Jensen and Miller, P.C.
1137 Silas Deane Highway
Wethersfield, CT 06109

PROJECT TITLE:
BEAM END REPAIR AND BEARING REPLACEMENT IN DISTRICT 4

TOWN: **THOMASTON**

DRAWING TITLE: **TYPICAL SECTIONS BRIDGE NO. 00468**

PROJECT NO. **174-402**
DRAWING NO. **S-22**
SHEET NO. **03.22**

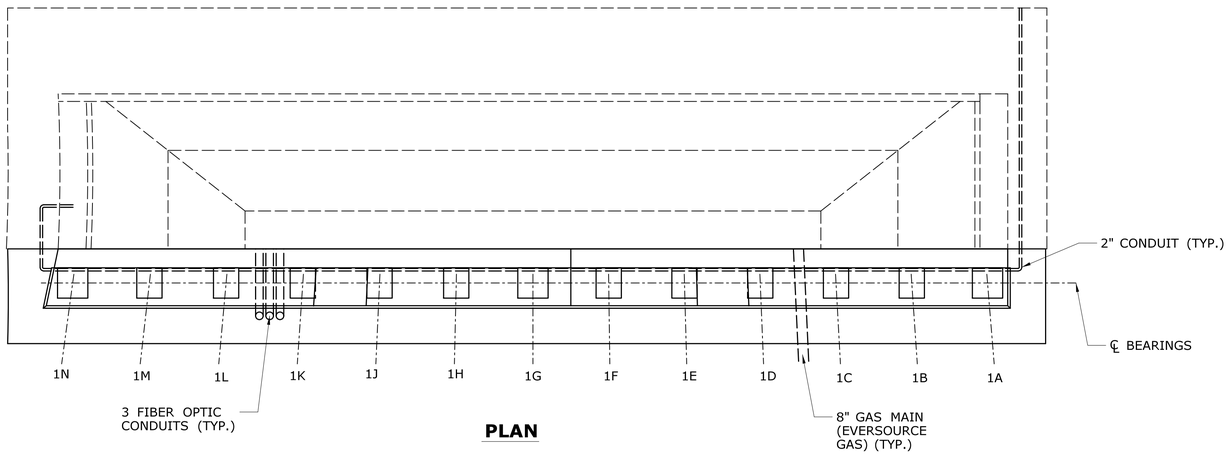

PLAN

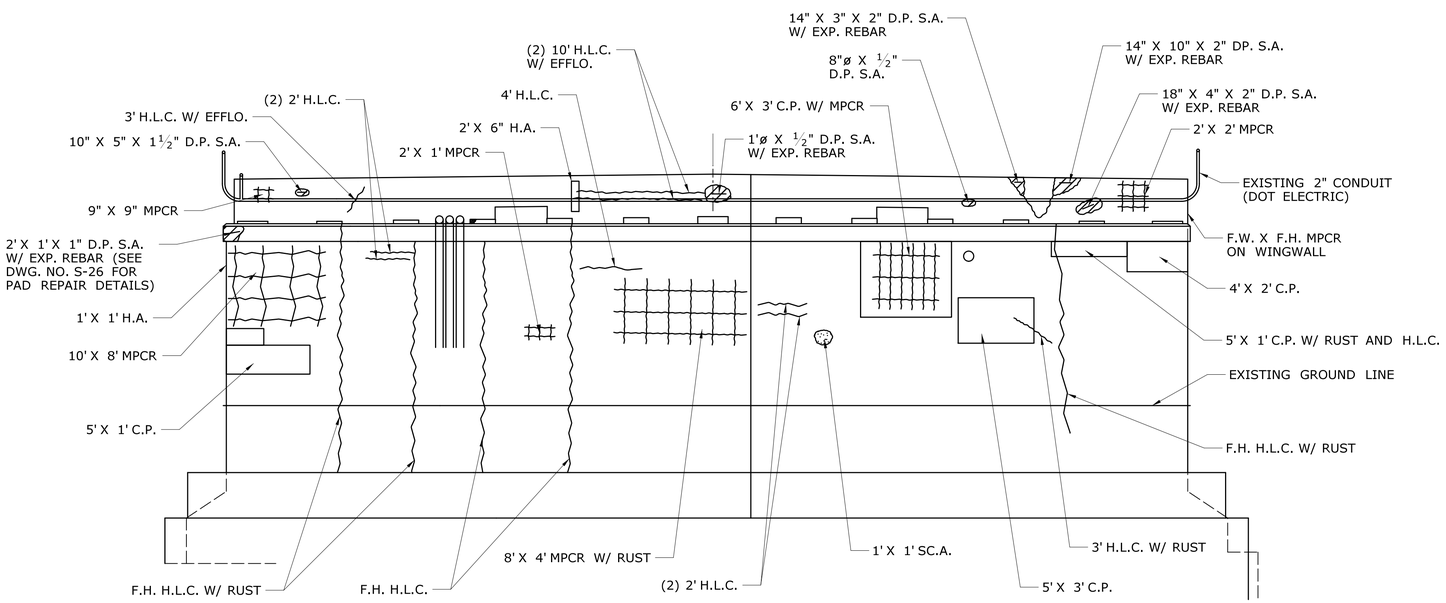

ELEVATION

NOTES:

1. THE SUBSTRUCTURE DETERIORATION AND REPAIR DIMENSIONS SHOWN ARE BASED ON LIMITED FIELD OBSERVATIONS AND BRIDGE SAFETY INSPECTION REPORT (02/26/2016). THE INFORMATION IS INTENDED TO BE USED AS A GUIDE AND DOES NOT NECESSARILY REFLECT THE CURRENT CONDITION OF THE STRUCTURE. THE EXACT LOCATION AND LIMITS OF DETERIORATED CONCRETE TO BE REPAIRED SHALL BE DETERMINED BY THE ENGINEER DURING CONSTRUCTION.
2. THE CONTRACTOR SHALL PROVIDE SAFE ACCESS FOR THE ENGINEER TO DELINEATE AND REVIEW THE REPAIR WORK. THE COST OF PROVIDING ACCESS SHALL BE INCLUDED IN THE COST OF APPROPRIATE REPAIR ITEMS.
3. THE CONTRACTOR SHALL NOT PERFORM ANY REPAIR WORK WITHOUT PRIOR APPROVAL FROM THE ENGINEER.
4. SPALLS, HOLLOW AND SCALE AREAS SHALL BE REPAIRED IN ACCORDANCE WITH "VARIABLE DEPTH PATCH DETAIL" OR "CLASS 'S' PATCH DETAIL" ARE SHOWN ON DWG. NOS. S-04 AND S-05.
5. MAXIMUM 15 LB PNEUMATIC HAMMER TO BE USED ADJACENT TO EXISTING REINFORCING TO REMAIN.

REFERENCES:

1. SEE DWG. NOS. S-03 TO S-06 FOR SUBSTRUCTURE REPAIR NOTES AND DETAILS.
2. SEE DWG. NO. S-26 FOR BEARING PAD RECONSTRUCTION.

CONCRETE DETERIORATION LEGEND

- CRACK (HAIRLINE UNLESS DIMENSIONED OTHERWISE) (H.L.C.)
- SPALL AREA WITH EXPOSED REINFORCING (S.A. W/ EXP. REBAR)
- SPALL AREA (S.A.)
- HOLLOW AREA (H.A.)
- SHALLOW REBAR (SH. A.)
- HONEYCOMB AREA (H.C.A.)
- SCALE AREA (SC. A.)
- MAP CRACKS (MPCR)
- E EFFLORESCENCE (EFFLO.)

KEY

F.H. = FULL HEIGHT
F.W. = FULL WIDTH
D.P. = DEEP
C.P. = CONCRETE PATCH
W/ = WITH

REV.	DATE	REVISION DESCRIPTION	SHEET NO.

THE INFORMATION, INCLUDING ESTIMATED QUANTITIES OF WORK, SHOWN ON THESE SHEETS IS BASED ON LIMITED INVESTIGATIONS BY THE STATE AND IS IN NO WAY WARRANTED TO INDICATE THE CONDITIONS OF ACTUAL QUANTITIES OF WORK WHICH WILL BE REQUIRED.

Plotted Date: 8/8/2017

DESIGNER/DRAFTER: D.C./S.C.
CHECKED BY: J.H.M. II
SCALE: 1" = 5'

STATE OF CONNECTICUT
DEPARTMENT OF TRANSPORTATION

Filename: ...\SB_MSH_1_174_402_BR_00468_S_23_ABUT1.dgn

SIGNATURE/BLOCK:
Close, Jensen and Miller, P.C.
1137 Silas Deane Highway
Wethersfield, CT 06109

PROJECT TITLE:
BEAM END REPAIR AND BEARING REPLACEMENT IN DISTRICT 4

TOWN: **THOMASTON**

DRAWING TITLE: **ABUTMENT NO. 1 BRIDGE NO. 00468**

PROJECT NO. **174-402**
DRAWING NO. **S-23**
SHEET NO. **03.23**

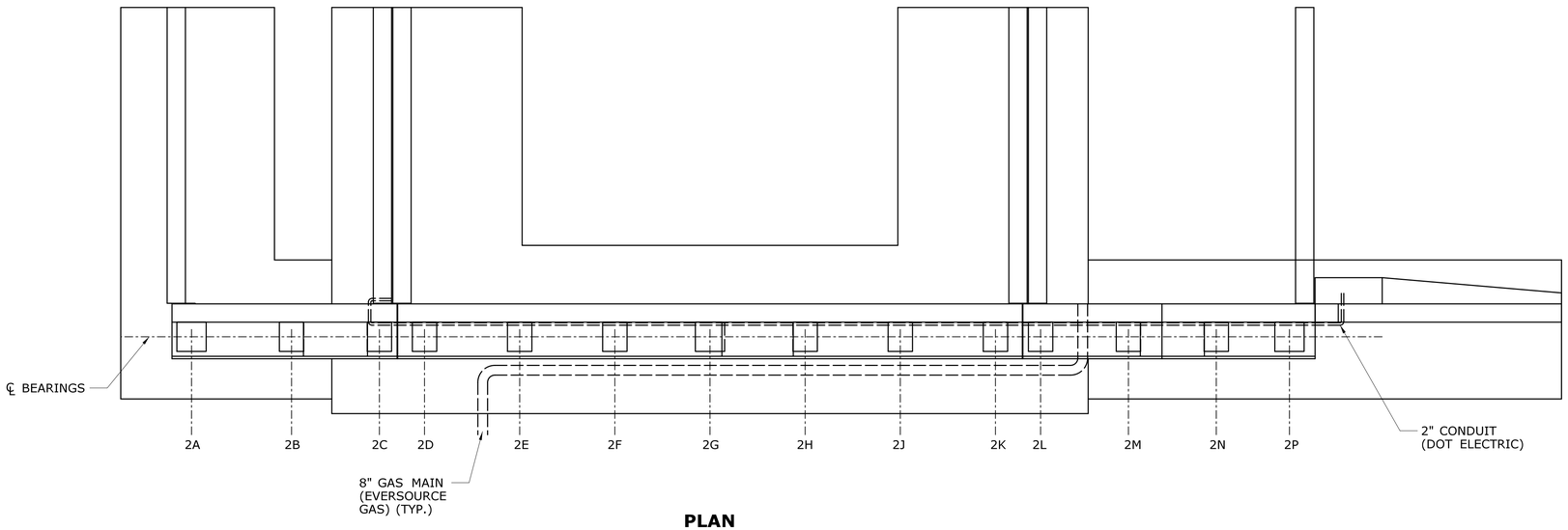

PLAN

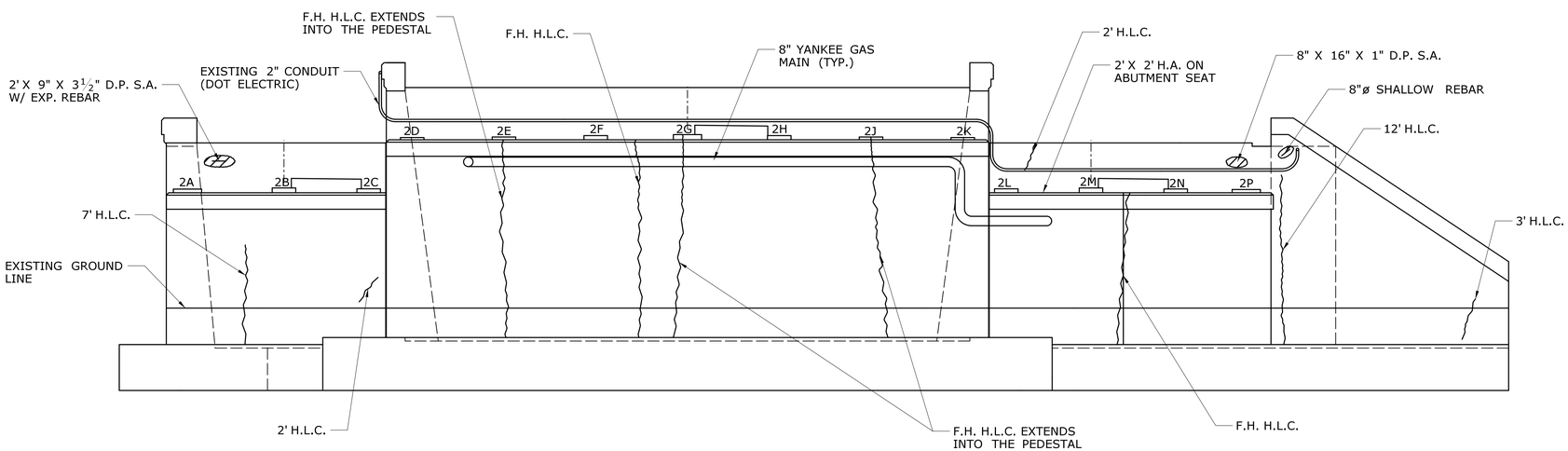

ELEVATION

NOTES:

1. THE SUBSTRUCTURE DETERIORATION AND REPAIR DIMENSIONS SHOWN ARE BASED ON LIMITED FIELD OBSERVATIONS AND BRIDGE SAFETY INSPECTION REPORT (02/26/2016). THE INFORMATION IS INTENDED TO BE USED AS A GUIDE AND DOES NOT NECESSARILY REFLECT THE CURRENT CONDITION OF THE STRUCTURE. THE EXACT LOCATION AND LIMITS OF DETERIORATED CONCRETE TO BE REPAIRED SHALL BE DETERMINED BY THE ENGINEER DURING CONSTRUCTION.
2. THE CONTRACTOR SHALL PROVIDE SAFE ACCESS FOR THE ENGINEER TO DELINEATE AND REVIEW THE REPAIR WORK. THE COST OF PROVIDING ACCESS SHALL BE INCLUDED IN THE COST OF APPROPRIATE REPAIR ITEMS.
3. THE CONTRACTOR SHALL NOT PERFORM ANY REPAIR WORK WITHOUT PRIOR APPROVAL FROM THE ENGINEER.
4. SPALLS, HOLLOW AND SCALE AREAS SHALL BE REPAIRED IN ACCORDANCE WITH "SHALLOW PATCH REPAIR DETAIL" OR "DEEP PATCH REPAIR DETAIL" ARE SHOWN ON DWG. NOS. S-04 AND S-05.
5. MAXIMUM 15 LB PNEUMATIC HAMMER TO BE USED ADJACENT TO EXISTING REINFORCING TO REMAIN.

CONCRETE DETERIORATION LEGEND

- CRACK (HAIRLINE UNLESS DIMENSIONED OTHERWISE) (H.L.C.)
- SPALL AREA WITH EXPOSED REINFORCING (S.A. W/ EXP. REBAR)
- SPALL AREA (S.A.)
- HOLLOW AREA (H.A.)
- SHALLOW REBAR (SH. A.)
- HONEY COMB AREA (H.C.A.)
- SCALE AREA (SC. A.)
- MAP CRACKS (MPCR)
- E EFFLORESCENCE (EFFLO.)

KEY

F.H. = FULL HEIGHT
F.W. = FULL WIDTH
D.P. = DEEP
C.P. = CONCRETE PATCH
W/ = WITH

REFERENCES:

1. SEE DWG. NOS. S-03 TO S-06 FOR SUBSTRUCTURE REPAIR NOTES AND DETAILS.

REV.	DATE	REVISION DESCRIPTION	SHEET NO.

THE INFORMATION, INCLUDING ESTIMATED QUANTITIES OF WORK, SHOWN ON THESE SHEETS IS BASED ON LIMITED INVESTIGATIONS BY THE STATE AND IS IN NO WAY WARRANTED TO INDICATE THE CONDITIONS OF ACTUAL QUANTITIES OF WORK WHICH WILL BE REQUIRED.

Plotted Date: 8/8/2017

DESIGNER/DRAFTER: D.C./S.C.
CHECKED BY: J.H.M. II
SCALE: 1" = 5'

STATE OF CONNECTICUT
DEPARTMENT OF TRANSPORTATION

Filename: ...\SB_MSH_1_174_402_BR_00468_S_24_ABUT2.dgn

SIGNATURE/ BLOCK:
Close, Jensen and Miller, P.C.
1137 Silas Deane Highway
Wethersfield, CT 06109

PROJECT TITLE:
BEAM END REPAIR AND BEARING REPLACEMENT IN DISTRICT 4

TOWN: **THOMASTON**

DRAWING TITLE: **ABUTMENT NO. 2 BRIDGE NO. 00468**

PROJECT NO. **174-402**
DRAWING NO. **S-24**
SHEET NO. **03.24**

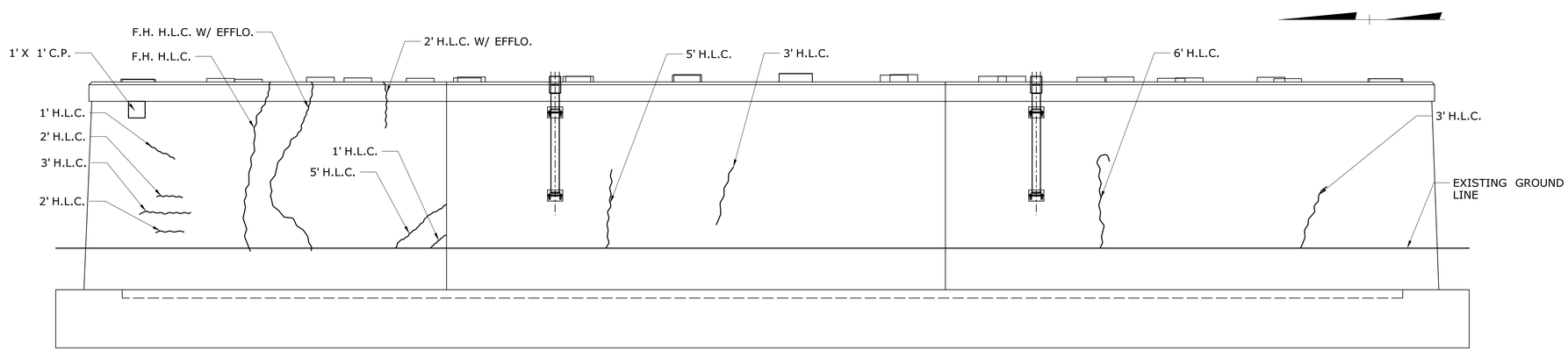

EAST ELEVATION A -

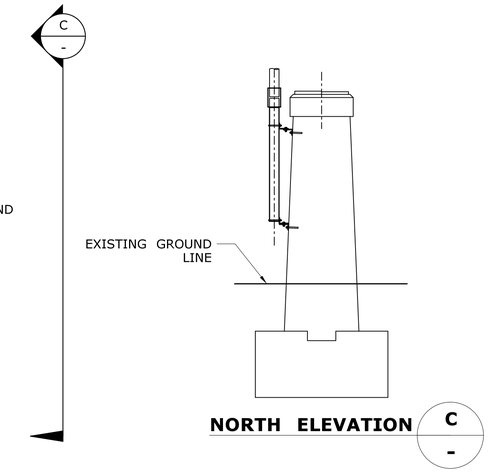

NORTH ELEVATION C -

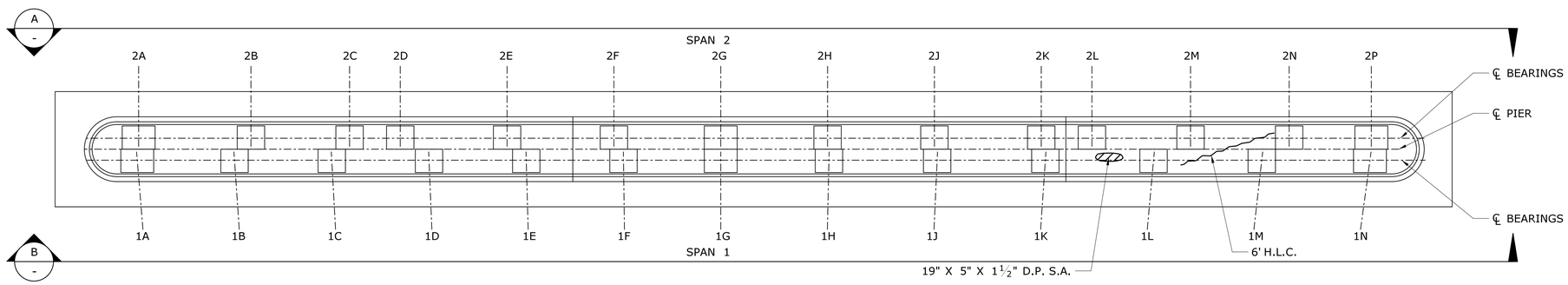

PLAN

NOTES:

FOR NOTES AND LEGEND SEE DWG. NO. S-23.

REFERENCES:

1. SEE DWG. NOS. S-03 TO S-06 FOR SUBSTRUCTURE REPAIR NOTES AND DETAILS.
2. SEE DWG. NO. S-27 FOR BRIDGE SCUPPER REPAIR.

KEY

F.H. = FULL HEIGHT
F.W. = FULL WIDTH
D.P. = DEEP
C.P. = CONCRETE PATCH
W/ = WITH

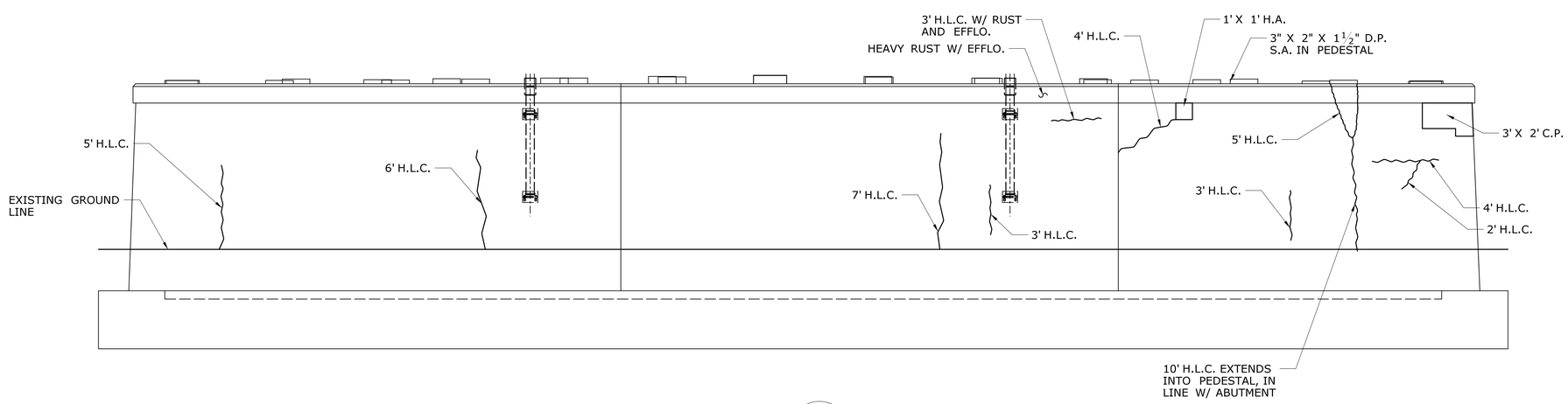

WEST ELEVATION B -

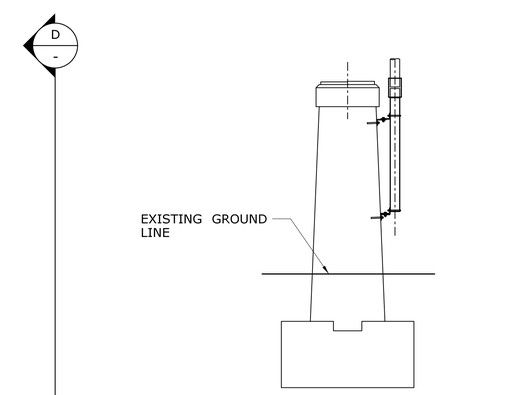

SOUTH ELEVATION D -

REV.	DATE	REVISION DESCRIPTION	SHEET NO.

THE INFORMATION, INCLUDING ESTIMATED QUANTITIES OF WORK, SHOWN ON THESE SHEETS IS BASED ON LIMITED INVESTIGATIONS BY THE STATE AND IS IN NO WAY WARRANTED TO INDICATE THE CONDITIONS OF ACTUAL QUANTITIES OF WORK WHICH WILL BE REQUIRED.

Plotted Date: 8/8/2017

DESIGNER/DRAFTER: D.C./S.C.
CHECKED BY: J.H.M. II
SCALE: ¼" = 1'-0"

STATE OF CONNECTICUT
DEPARTMENT OF TRANSPORTATION

Filename: ...\SB_MSH_1_174_402_BR_00468_S_25_PIER.dgn

SIGNATURE/BLOCK:
Close, Jensen and Miller, P.C.
1137 Silas Deane Highway
Wethersfield, CT 06109

PROJECT TITLE:
BEAM END REPAIR AND BEARING REPLACEMENT IN DISTRICT 4

TOWN: **THOMASTON**

DRAWING TITLE: **PIER BRIDGE NO. 00468**

PROJECT NO. **174-402**
DRAWING NO. **S-25**
SHEET NO. **03.25**

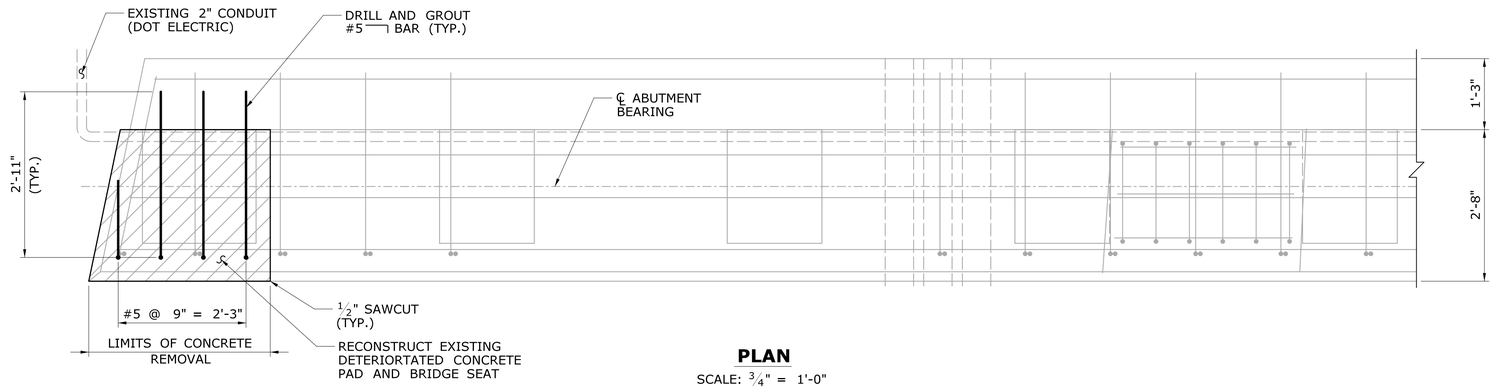

PLAN

SCALE: ¾" = 1'-0"

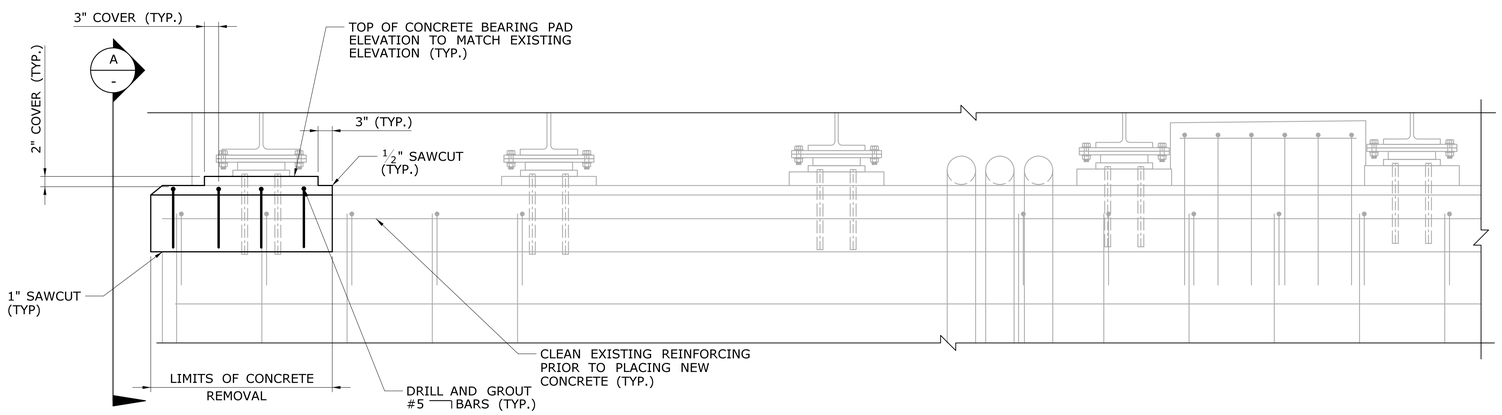

ELEVATION

SCALE: ¾" = 1'-0"

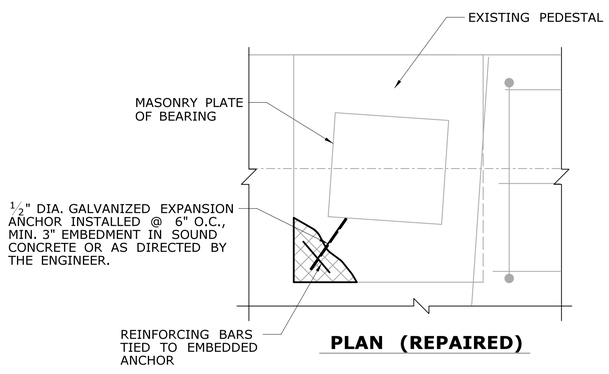

PLAN (REPAIRED)

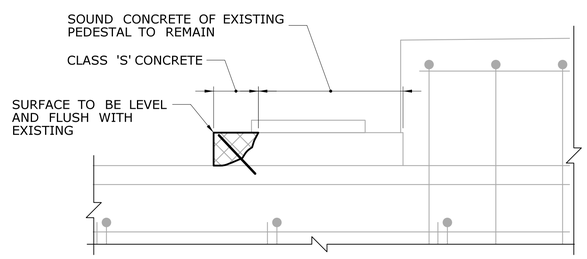

SECTION (REPAIRED)

TYPICAL PEDESTAL CONCRETE REPAIR

SCALE: 1½" = 1'-0"

CONCRETE ABUTMENT AND BEARING PAD REPAIR NOTES:

1. PROVIDE A ½" SAWCUT ALONG PERIMETER OF REPAIR AREA. NEW CONCRETE TO MATCH EXISTING BEARING PAD AND ABUTMENT PROFILE.
2. MAXIMUM 15 POUND PNEUMATIC HAMMER TO BE USED ADJACENT TO REINFORCING TO REMAIN.
3. AFTER REMOVAL OF DETERIORATED CONCRETE, THE REINFORCEMENT MAY BE FOUND TO BE DETERIORATED PAST THE POINT THAT IT IS ACCEPTABLE TO REUSE. THE EXISTING REINFORCING SHALL BE REPLACED WHEN:
   - EXISTING REINFORCING HAS LOST 25% OR MORE OF THE ORIGINAL SECTIONAL AREA.
   - EXISTING REINFORCING IS BROKEN.
   - AS ORDERED BY THE ENGINEER.
4. ALL EXPOSED REINFORCING STEEL TO REMAIN SHALL BE THOROUGHLY CLEANED OF ALL CONCRETE, POWDER-LIKE RUST, OIL, DUST, AND LOOSE PARTICLES.
5. CONCRETE SHALL BE REMOVED TO THE LIMITS SHOWN ON THE PLAN. IF SOUND CONCRETE IS NOT ENCOUNTERED AT THE LIMITS OF REMOVAL THE ENGINEER SHALL BE NOTIFIED IMMEDIATELY.
6. THE CONTRACTOR SHALL TAKE ALL PRECAUTIONS TO AVOID DRILLING EXISTING REINFORCING. IF EXISTING REINFORCING BARS ARE ENCOUNTERED DURING THE DRILLING OPERATIONS, THE HOLES SHALL BE RELOCATED TO CLEAR THE EXISTING REINFORCEMENT. ABANDONED HOLES SHALL BE FILLED WITH CHEMICAL ANCHORAGE MATERIAL.
7. DEPTH AND DIAMETER OF THE DRILL HOLES FOR THE CHEMICAL ANCHORAGE TO BE AS REQUIRED BY THE CHEMICAL ADHESIVE MANUFACTURER TO DEVELOP FULL STRENGTH OF THE BAR.
8. MATCH EXISTING BAR SIZES AND SPACING FOR BOTH LONGITUDINAL AND TRANSVERSE BARS.
9. REINFORCEMENT SHALL BE COATED AND CONFORM TO ASTM A615, GRADE 60 (EPOXY-COATED).
10. THE COST OF REMOVAL OF CONCRETE, INCLUDING THE ½" SAWCUT, AND FURNISHING AND PLACING OF CONCRETE AND REINFORCEMENT AT THE ABUTMENT AND CONCRETE BEARING PAD SHALL BE INCLUDED FOR PAYMENT UNDER THE ITEM "REPAIR OF BEARING PAD".
11. THE CONTRACTOR SHALL NOT PERFORM ANY REPAIR WORK WITHOUT THE APPROVAL OF THE ENGINEER.
12. BEAMS TO BE REPAIRED SHALL BE JACKED FOR THE DURATION OF THE CONCRETE REPAIR. TEMPORARY SUPPORT SYSTEM SHALL BE INSTALLED PRIOR TO REMOVAL OF CONCRETE FOR REPAIR. SEE S-20 FOR DETAILS.

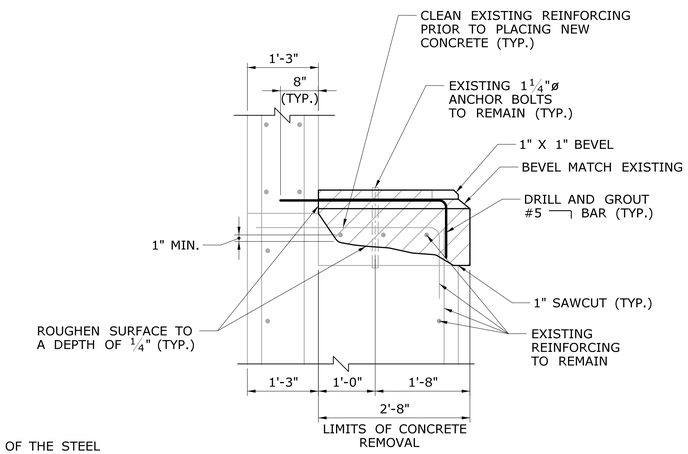

SECTION A -

SCALE: ¾" = 1'-0"

NOTES:

1. IF MORE THAN 10% OF THE AREA OF THE STEEL MASONRY PLATE IS UNDERMINED, THE ENGINEER SHALL BE NOTIFIED IMMEDIATELY.
2. EXPANSION ANCHORS SHALL BE MECHANICALLY GALVANIZED IN ACCORDANCE WITH ASTM B695, CLASS 50, TYPE 1. COST OF EXPANSION ANCHOR AND INSTALLATION SHALL BE INCLUDED IN THE COST OF "CLASS 'S' CONCRETE."

DENOTES LIMITS OF CONCRETE REMOVAL

DENOTES LIMITS OF DAMAGED AREA

ABUTMENT NO. 1 CONCRETE BEARING PAD REPAIRS

REV.	DATE	REVISION DESCRIPTION	SHEET NO.

THE INFORMATION, INCLUDING ESTIMATED QUANTITIES OF WORK, SHOWN ON THESE SHEETS IS BASED ON LIMITED INVESTIGATIONS BY THE STATE AND IS IN NO WAY WARRANTED TO INDICATE THE CONDITIONS OF ACTUAL QUANTITIES OF WORK WHICH WILL BE REQUIRED.

Plotted Date: 8/8/2017

DESIGNER/DRAFTER: D.C./S.C.

CHECKED BY: J.H.M. II

SCALE AS NOTED

STATE OF CONNECTICUT
DEPARTMENT OF TRANSPORTATION

Filename: ..\SB_MSH_1_174_402_BR_00468_S_26_PAD_REPAIR.dgn

SIGNATURE/BLOCK:

Close, Jensen and Miller, P.C.
1137 Silas Deane Highway
Wethersfield, CT 06109

PROJECT TITLE:

BEAM END REPAIR AND BEARING REPLACEMENT IN DISTRICT 4

TOWN: **THOMASTON**

DRAWING TITLE: **PAD REPAIRS BRIDGE NO. 00468**

PROJECT NO. **174-402**

DRAWING NO. **S-26**

SHEET NO. **03.26**

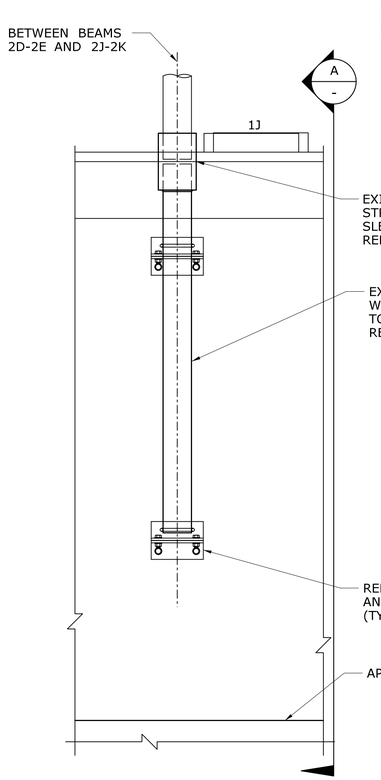

ELEVATION

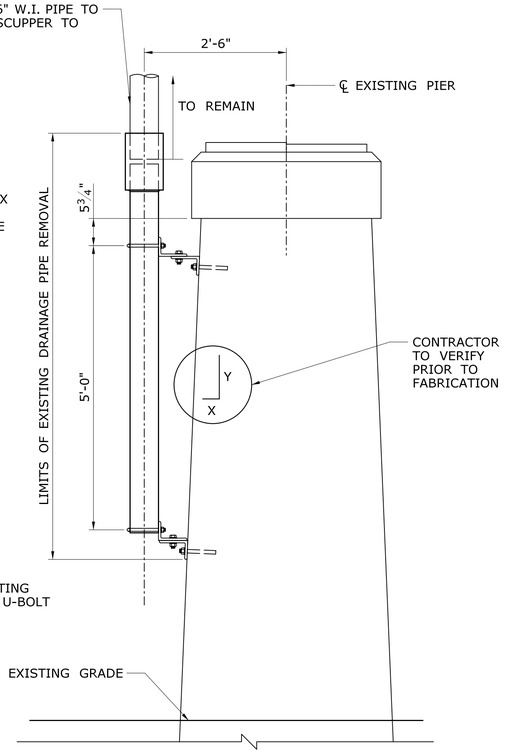

SECTION A -

EXISTING

SCALE: ¾" = 1'-0"

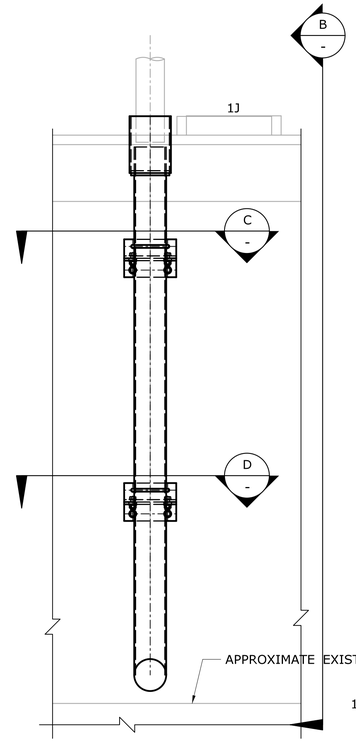

ELEVATION

SCALE: ¾" = 1'-0"

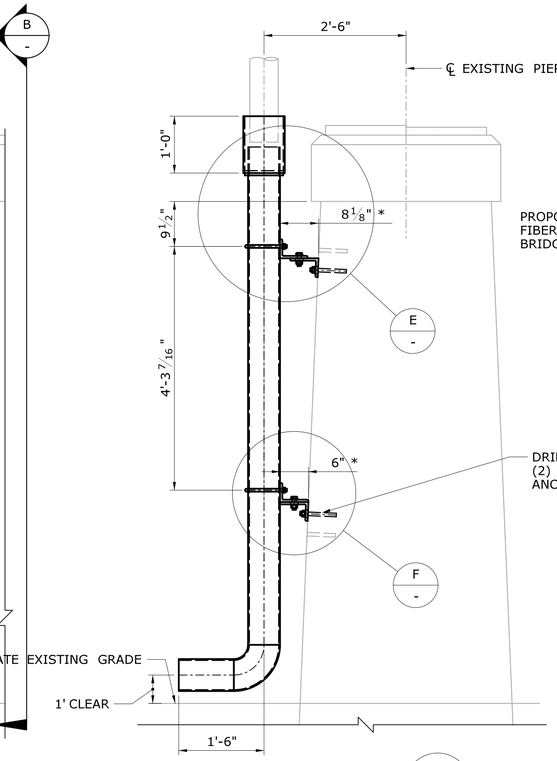

SECTION B -

SCALE: ¾" = 1'-0"

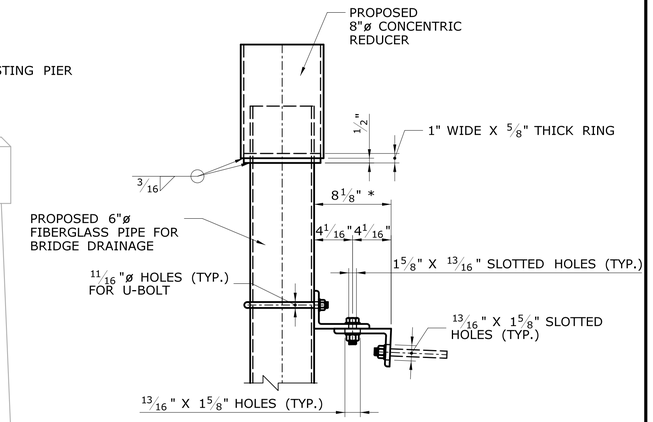

DETAIL E -

SCALE: 1½" = 1'-0"

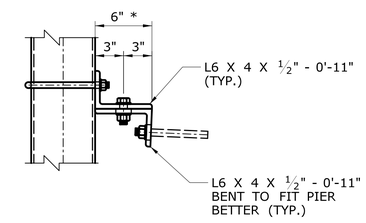

DETAIL F -

SCALE: 1½" = 1'-0"

* DISMISSIONS TO BE FIELD VERIFIED

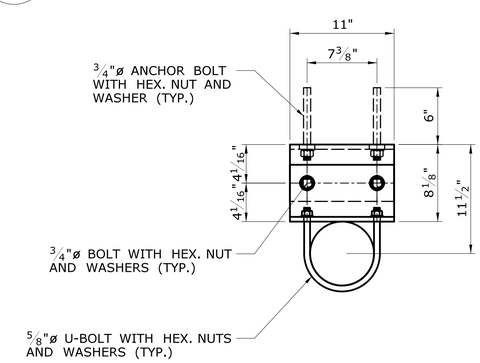

SECTION C -

SCALE: 1½" = 1'-0"

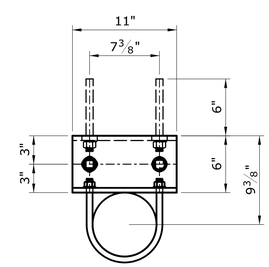

SECTION D -

SCALE: 1½" = 1'-0"

PROPOSED

NOTES:

1. ALL STEEL FITTINGS, ANGLES, U-BOLTS, AND ANCHORAGE SYSTEM SHALL BE GALVANIZED.
2. REMOVAL AND REPLACEMENT OF PORTION OF DETERIORATED EXISTING DOWNSPOUT, PIPES, AND ANCHORAGE SYSTEM SHALL BE INCLUDED IN THE ITEM "REMOVAL AND REPLACEMENT OF EXISTING BRIDGE DRAINAGE SYSTEM."
3. THE CONTRACTOR SHALL TAKE ALL PRECAUTIONS TO AVOID DRILLING EXISTING REINFORCING. IF EXISTING REINFORCING BARS ARE ENCOUNTERED DURING THE DRILLING OPERATIONS, THE HOLES SHALL BE RELOCATED TO CLEAR THE EXISTING REINFORCEMENT. ABANDONED HOLES SHALL BE FILLED WITH CHEMICAL ANCHORAGE MATERIAL.
4. DEPTH AND DIAMETER OF THE DRILL HOLES FOR THE CHEMICAL ANCHORAGE TO BE AS REQUIRED BY THE CHEMICAL ADHESIVE MANUFACTURER TO DEVELOP FULL STRENGTH OF THE BAR.

REV.	DATE	REVISION DESCRIPTION	SHEET NO.

THE INFORMATION, INCLUDING ESTIMATED QUANTITIES OF WORK, SHOWN ON THESE SHEETS IS BASED ON LIMITED INVESTIGATIONS BY THE STATE AND IS IN NO WAY WARRANTED TO INDICATE THE CONDITIONS OF ACTUAL QUANTITIES OF WORK WHICH WILL BE REQUIRED.

Plotted Date: 8/8/2017

DESIGNER/DRAFTER: D.C./S.C.

CHECKED BY: J.H.M. II

SCALE AS NOTED

STATE OF CONNECTICUT
DEPARTMENT OF TRANSPORTATION

Filename: ..\SB_MSH_1_174_402_BR_00468_S_27_DRAINAGE.dgn

SIGNATURE/BLOCK:

Close, Jensen and Miller, P.C.
1137 Silas Deane Highway
Wethersfield, CT 06109

PROJECT TITLE:

BEAM END REPAIR AND BEARING REPLACEMENT IN DISTRICT 4

TOWN: **THOMASTON**

DRAWING TITLE: **DRAINAGE REPAIRS BRIDGE NO. 00468**

PROJECT NO. **174-402**

DRAWING NO. **S-27**

SHEET NO. **03.27**

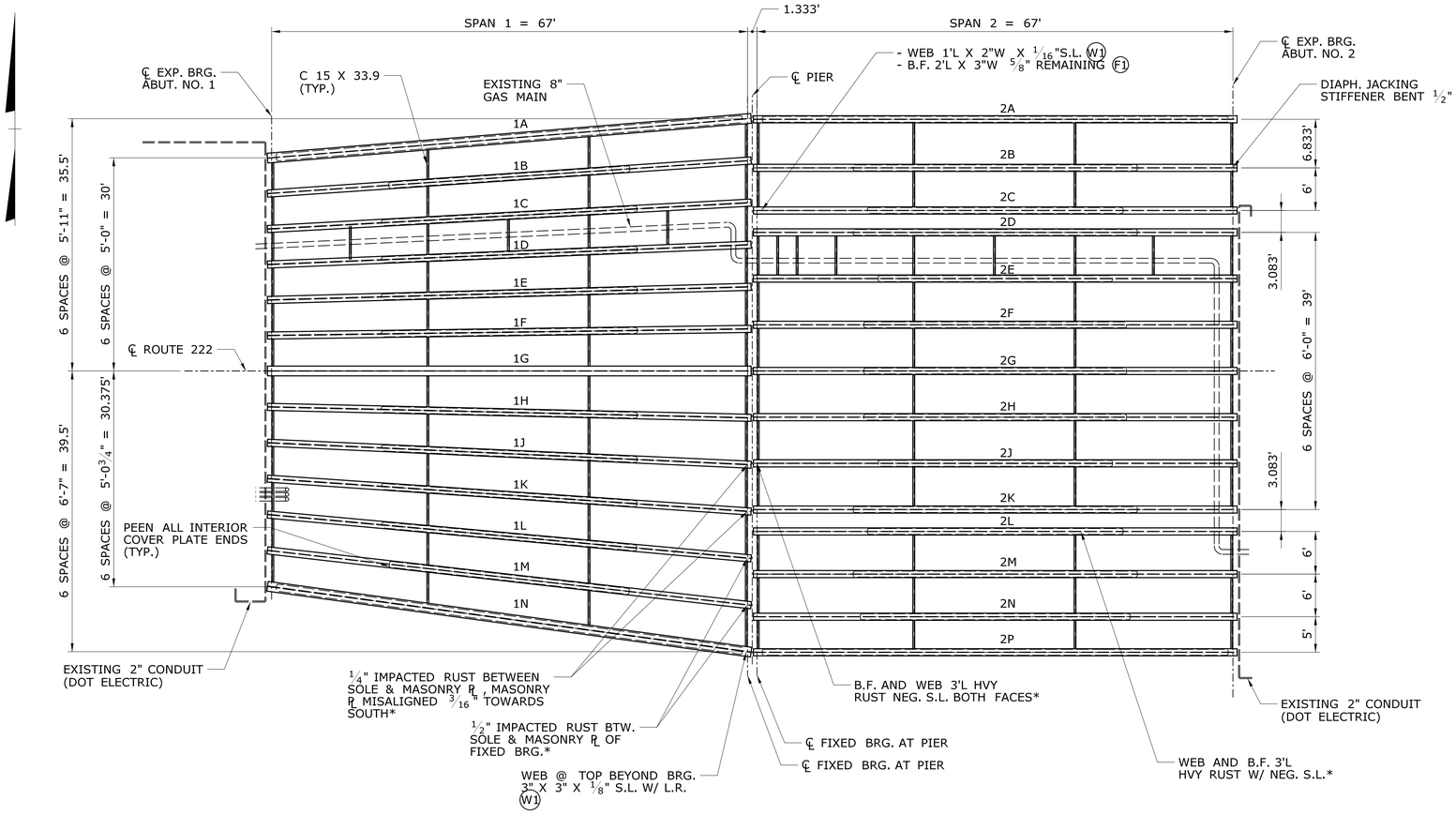

FRAMING PLAN

EXISTING BEAM DIMENSIONS

BEAM	SIZE	COVER PLATE	BEAM LENGTH (℄-TO-℄)
1A	36 WF 230	12" X 3/4" X F.L.	67.225'
1B	36 WF 194	10" X 1/2" X 34'-0"	67.157'
1C	36 WF 170	10" X 1/2" X 36'-0"	67.100'
1D	36 WF 170	10" X 1/2" X 36'-0"	67.056'
1E	36 WF 170	10" X 1/2" X 36'-0"	67.025'
1F	36 WF 170	10" X 1/2" X 36'-0"	67.006'
1G	36 WF 230	NO COVER PLATE	67.000'
1H	36 WF 170	10" X 1/2" X 36'-0"	67.017'
1J	36 WF 170	10" X 1/2" X 36'-0"	67.069'
1K	36 WF 170	10" X 1/2" X 36'-0"	67.155'
1L	36 WF 170	10" X 1/2" X 36'-0"	67.275'
1M	36 WF 194	10" X 1/2" X 34'-0"	67.431'
1N	36 WF 230	12" X 3/4" X F.L.	67.619'
2A	36 WF 160	10" X 1/2" X F.L.	67.000'
2B	36 WF 150	10" X 1/2" X 40'-0"	67.000'
2C	36 WF 150	10" X 1/2" X 36'-0"	67.000'
2D	36 WF 170	10" X 3/4" X 40'-0"	67.000'
2E	36 WF 194	10" X 1/2" X 33'-0"	67.000'
2F	36 WF 170	10" X 3/4" X 37'-0"	67.000'
2G	36 WF 170	10" X 3/4" X 37'-0"	67.000'
2H	36 WF 170	10" X 3/4" X 37'0"	67.000'
2J	36 WF 194	10" X 1/2" X 33'-0"	67.000'
2K	36 WF 170	10" X 3/4" X 40'-0"	67.000'
2L	36 WF 150	10" X 1/2" X 36'-0"	67.000'
2M	36 WF 150	10" X 1/2" X 40'-0"	67.000'
2N	36 WF 160	10" X 3/4" X 38'-0"	67.000'
2P	36 WF 160	10" X 1/2" X F.L.	67.000'

LEGEND

(C1) TO (C6) CONNECTION PLATE REPAIR (SEE DWG. NO. S-19)
(F1) TO (F2) FLANGE REPAIR (SEE DWG. NO. S-17)
(S1) TO (S4) STIFFENER REPAIR (SEE DWG. NOS. S-17 TO S-18)
(W1) TO (W3) WEB REPAIR (SEE DWG. NOS. S-17 TO S-18)

KEY

F.H. = FULL HEIGHT
F.W. = FULL WIDTH
F.L. = FULL LENGTH
T.F. = TOP FLANGE
B.F. = BOTTOM FLANGE
L.R. = LAMINAR RUST
S.L. = SECTION LOSS
NEG. = NEGLIGIBLE

* = NO REPAIR REQUIRED OR AS DIRECTED BY THE ENGINEER

STRUCTURAL STEEL NOTES:

1. STRUCTURAL STEEL (LOW ALLOY) FOR ALL SUPERSTRUCTURE STEEL REPAIRS SHALL CONFORM TO AASHTO M270, GRADE 50 AND SHALL BE PAID UNDER ITEM "STRUCTURAL STEEL REPAIRS (SITE NO. 1)", SEE SPECIAL PROVISIONS. STRUCTURAL STEEL SHALL BE FREE OF BURRS, NICKS OR GAUGES. THE ESTIMATED WEIGHT OF STRUCTURAL STEEL IS 1 CWT AND IS PROVIDED FOR INFORMATION ONLY.
2. REMOVAL OF DETERIORATED PORTIONS OF EXISTING STRUCTURAL STEEL, REGARDLESS OF REMOVAL METHODS, SHALL NOT BE MEASURED FOR PAYMENT, THE COST OF WHICH SHALL BE INCLUDED IN THE ITEM "STRUCTURAL STEEL REPAIRS (SITE NO. 1)".
3. MULTIPLE PASS WELDS INSPECTED BY THE MAGNETIC PARTICLE METHOD SHALL HAVE EACH PASS OR LAYER INSPECTED AND ACCEPTED BEFORE PROCEEDING TO THE NEXT PASS OR LAYER, AS DETERMINED BY THE ENGINEER.
4. WELDING ELECTRODES SHALL HAVE THE SAME CORROSION RESISTANCE AS THE BASE METAL.
5. ALL REPAIR FILLET WELDS SHALL BE INSPECTED BY THE MAGNETIC PARTICLE METHOD. ALL COMPLETE JOINT PENETRATION WELDS SHALL BE INSPECTED BY ULTRASONIC TESTING.

STEEL FRAMING DETERIORATION NOTES:

1. THE DETERIORATION AND REPAIR DIMENSIONS AND LOCATIONS DEPICTED ON THE FRAMING PLAN ARE BASED ON LIMITED FIELD OBSERVATIONS AND BRIDGE SAFETY IN-DEPTH INSPECTION REPORT DATED 02/26/2016. THE INFORMATION IS INTENDED TO BE USED AS A GUIDE AND DOES NOT NECESSARILY REFLECT THE CURRENT CONDITION OF THE STRUCTURE. THE EXACT LOCATION AND LIMITS OF DETERIORATED STEEL TO BE REPAIRED AND THE PROPOSED REPAIR DETAIL SHALL BE DELINEATED AND DETERMINED BY THE ENGINEER DURING CONSTRUCTION. NO MATERIAL SHALL BE ORDERED OR FABRICATED UNTIL THE ENGINEER HAS APPROVED REPAIR LOCATIONS. EXISTING STRUCTURAL STEEL A.S.T.M., A-373 GRADE 33 SHALL UTILIZE WELDED REPAIR DETAILS.
2. NO STEEL REPAIRS SHALL BE PERFORMED WITHOUT THE PRIOR APPROVAL OF THE ENGINEER.
3. REPAIR WORK SHALL BE PERFORMED IN ACCORDANCE WITH THE SUGGESTED SEQUENCE OF STEEL REPAIRS (SEE DWG. NO. S-16).

REFERENCES:

1. SEE DWG. NOS. S-16 TO S-19 FOR STEEL REPAIR NPOTES AND DETAILS.
2. SEE DWG. NO. S-29 FOR FIELD PAINTING DETAILS AND NOTES.
3. SEE DWG. NO. S-20 FOR JACKING SUPPORT SYSTEM DETAILS AND NOTES.
4. SEE DWG. NO. S-29 FOR REMAINING STRUCTURAL STEEL MEMBER SIZES.
5. SEE DWG. NO. S-35 FOR PEENING DETAIL.

REV.	DATE	REVISION DESCRIPTION	SHEET NO.

THE INFORMATION, INCLUDING ESTIMATED QUANTITIES OF WORK, SHOWN ON THESE SHEETS IS BASED ON LIMITED INVESTIGATIONS BY THE STATE AND IS IN NO WAY WARRANTED TO INDICATE THE CONDITIONS OF ACTUAL QUANTITIES OF WORK WHICH WILL BE REQUIRED.

Plotted Date: 8/8/2017

DESIGNER/DRAFTER: D.C./S.C.
CHECKED BY: J.H.M. II
SCALE: 1" = 10'

STATE OF CONNECTICUT
DEPARTMENT OF TRANSPORTATION

Filename: ...\SB_MSH_1_174_402_BR_00468_S_28_FRAMING_PLAN.dgn

SIGNATURE/BLOCK:
Close, Jensen and Miller, P.C.
1137 Silas Deane Highway
Wethersfield, CT 06109

PROJECT TITLE:
BEAM END REPAIR AND BEARING REPLACEMENT IN DISTRICT 4

TOWN: THOMASTON

DRAWING TITLE: FRAMING PLAN BRIDGE NO. 00468

PROJECT NO. 174-402
DRAWING NO. S-28
SHEET NO. 03.28

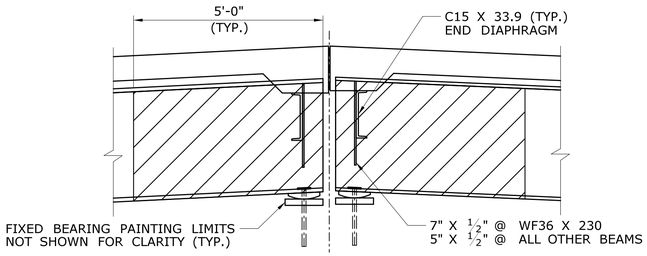

TYPICAL BEAM END ELEVATION AT PIER

SCALE: ½" = 1'-0"

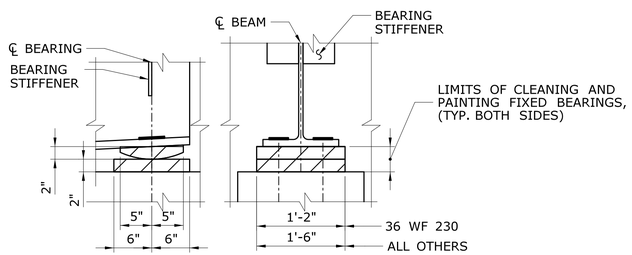

FIXED BEARING DETAILS

SCALE: 1" = 1'-0"

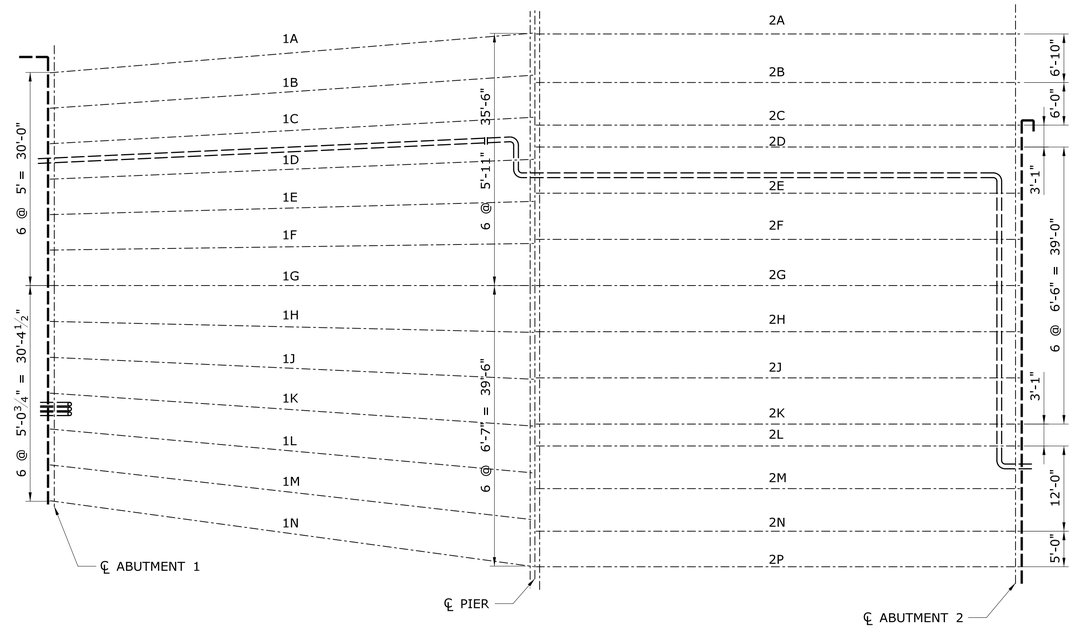

FRAMING PLAN

SCALE: 3/32" = 1'-0"

HATCHED PATTERN DENOTES PAINTING LIMITS FOR PIER BEAM ENDS, END DIAPHRAGMS, STIFFENERS, AND FIXED BEARINGS TO BE PAID FOR UNDER THE ITEM "ABRASIVE BLAST CLEANING AND FIELD PAINTING OF BEAM ENDS (SITE NO. 1)."

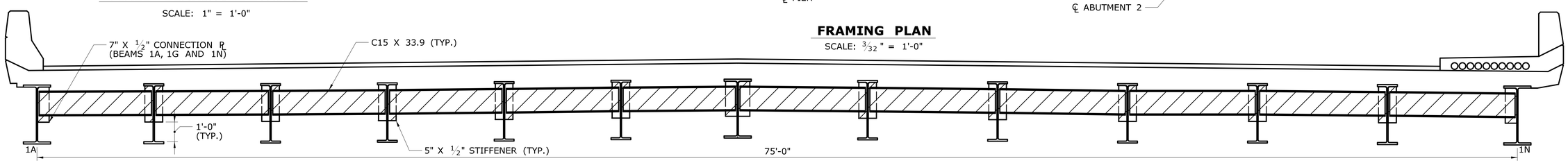

TYPICAL BRIDGE SECTION SPAN 1 AT PIER

SCALE: 3/8" = 1'-0"

END DIAPHRAGMS (LIMITS OF PAINTING)
NOTE - ONLY BEAM ENDS AND END DIAPHRAGMS AT PIER SHALL BE PAINTED

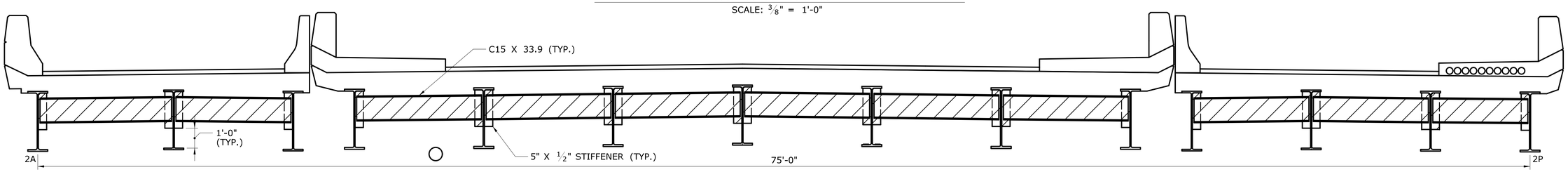

TYPICAL BRIDGE SECTION SPAN 2 AT PIER

SCALE: 3/8" = 1'-0"

END DIAPHRAGMS (LIMITS OF PAINTING)
NOTE - ONLY BEAM ENDS AND END DIAPHRAGMS AT PIER SHALL BE PAINTED

PAINTING NOTES:

1. THE LIMITS OF BEAM END PAINTING ARE THE HATCHED AREAS SHOWN ON THIS SHEET. ALL EXPOSED SURFACES OF STEEL MEMBERS, SUCH AS END DIAPHRAGMS, STIFFENERS/CONNECTION PLATES, SOLE AND LOAD PLATES OF EXISTING BEARINGS THAT ARE WITHIN THE LIMITS SHALL BE PAINTED. PAINTING THE HATCHED AREAS SHALL BE PAID FOR UNDER THE ITEM "ABRASIVE BLAST CLEANING AND FIELD PAINTING OF BEAM ENDS (SITE NO. 1)."
2. CLEANING AND PAINTING OF AREAS IDENTIFIED BY THE ENGINEER OR DEPICTED IN THE PLANS OTHER THAN THE ENDS OF THE EXISTING BEAMS AND END DIAPHRAGMS AT THE PIER, SHALL BE PAID FOR UNDER THE ITEM "LOCALIZED PAINT REMOVAL AND FIELD PAINTING OF EXISTING STEEL", SEE SPECIAL PROVISIONS. DISPOSAL OF LEAD DEBRIS SHALL BE PAID FOR UNDER THE ITEM "DISPOSAL OF LEAD DEBRIS FROM ABRASIVE BLAST CLEANING", SEE SPECIAL PROVISIONS.
3. THE COLOR OF THE TOP COAT ON THE STRUCTURAL STEEL SHALL BE FEDERAL STANDARD 595, DEPARTMENT STANDARD COLOR NO. 506 (GREEN), EXACT COLOR TO BE DETERMINED BY THE ENGINEER. PROPOSED PAINT TO MATCH EXISTING AS CLOSE AS POSSIBLE.
4. THE CONTRACTOR SHALL COORDINATE ALL WORK WITH THE VARIOUS UTILITIES TO PROTECT AND MAINTAIN THE EXISTING UTILITY SERVICES DURING PAINTING.
5. THE CONTAINMENT SYSTEM SHALL BE DESIGNED BY THE CONTRACTOR AND REVIEWED BY THE ENGINEER IN ACCORDANCE WITH THE SPECIAL PROVISION "CLASS 1 CONTAINMENT AND COLLECTION OF SURFACE PREPARATION DEBRIS (SITE NO. 1)." CLASS 1 CONTAINMENT SHALL BE PROVIDED TO CONTAIN DEBRIS RESULTING FROM THE REMOVAL OF LOCATIONS IN THE PREPARATION OF STEEL SURFACES FOR PAINTING.
6. IF THE CONTRACTOR CHOOSES TO ABRASIVE BLAST CLEAN THE BEAM ENDS PRIOR TO STRUCTURAL STEEL REPAIRS, THEY SHOULD ONLY BE PRIMER PAINTED. THIS WILL ALLOW FOR STRUCTURAL REPAIRS TO BE COVERED IN ONE APPLICATION OF TOP COAT ALONG WITH BEAM ENDS.

REFERENCES:

1. SEE DWG. NO. S-28 FOR STEEL REPAIR LOCATIONS.
2. SEE DWG. NO. S-28 FOR MEMBER SIZES.

REV.	DATE	REVISION DESCRIPTION	SHEET NO.

THE INFORMATION, INCLUDING ESTIMATED QUANTITIES OF WORK, SHOWN ON THESE SHEETS IS BASED ON LIMITED INVESTIGATIONS BY THE STATE AND IS IN NO WAY WARRANTED TO INDICATE THE CONDITIONS OF ACTUAL QUANTITIES OF WORK WHICH WILL BE REQUIRED.

Plotted Date: 8/8/2017

DESIGNER/DRAFTER: D.C./S.C.
CHECKED BY: J.H.M. II
SCALE AS NOTED

STATE OF CONNECTICUT
DEPARTMENT OF TRANSPORTATION

Filename: ...\SB_MSH_1_174_402_BR_00468_S_29_BEAM-PAINT.dgn

SIGNATURE/BLOCK:
Close, Jensen and Miller, P.C.
1137 Silas Deane Highway
Wethersfield, CT 06109

PROJECT TITLE:
BEAM END REPAIR AND BEARING REPLACEMENT IN DISTRICT 4

TOWN: MIDDLEBURY

DRAWING TITLE:
PAINTING DETAILS
BRIDGE NO. 00468

PROJECT NO. 174-402
DRAWING NO. S-29
SHEET NO. 03.29

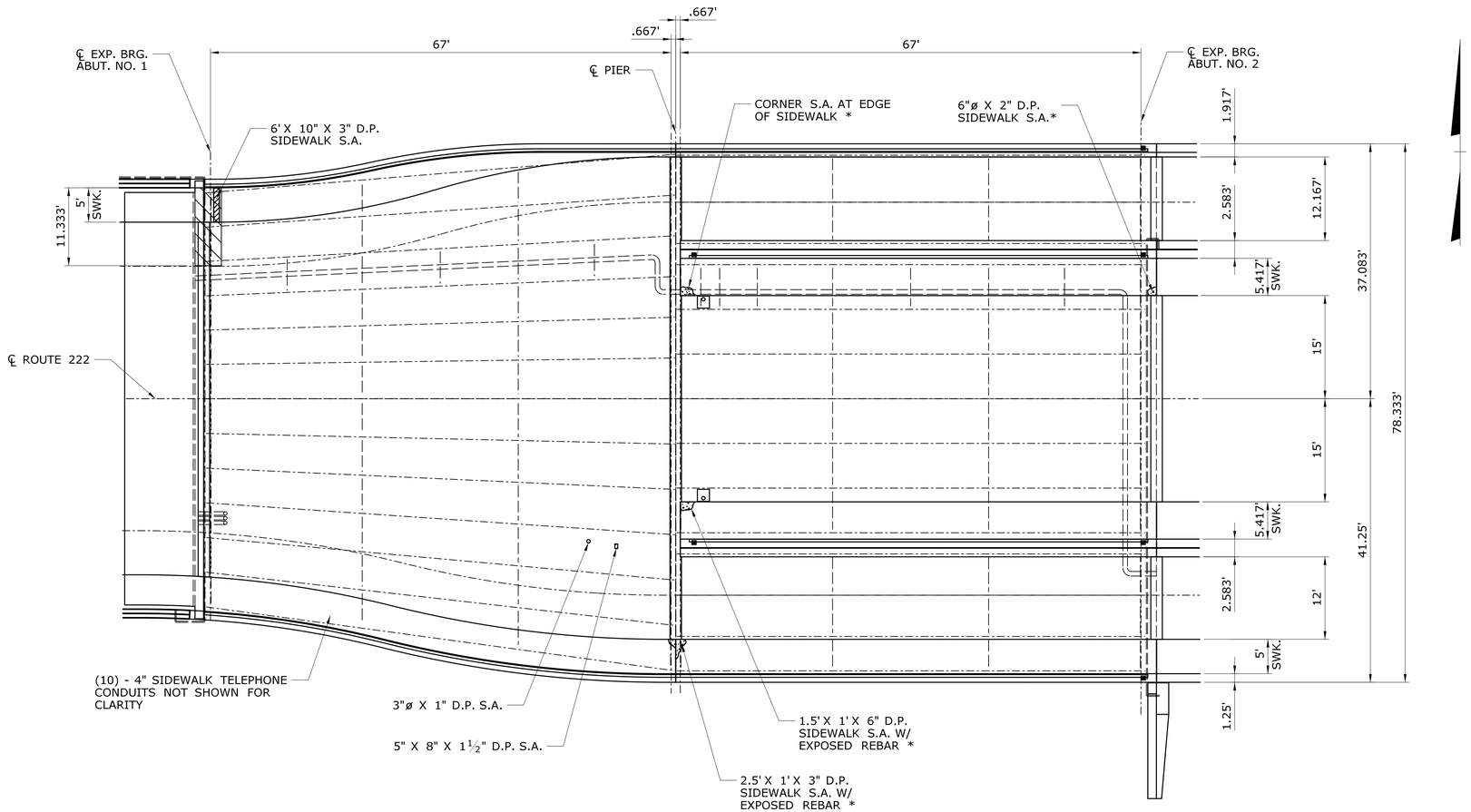

DECK PLAN

LEGEND (TOP SIDE OF DECK)

* SIDEWALK DETERIORATION

LEGEND

- CRACK (HAIRLINE UNLESS DIMENSIONED OTHERWISE) (H.L.C.)
- SPALL AREA WITH EXPOSED REINFORCING (S.A. W/ E.R.)
- SPALL AREA (S.A.)
- HOLLOW AREA (H.A.)
- SHALLOW REBAR (SH. A.)
- HONEYCOMB AREA (H.C.A.)
- MAP CRACKS (MPCR)

APPROXIMATE LOCATIONS PER 02/26/2016 BRIDGE INSPECTION REPORT

HATCHED AREA DENOTED LIMITS OF DECK END RECONSTRUCTION

KEY

F.H. = FULL HEIGHT
F.W. = FULL WIDTH
D.P. = DEEP

NOTES:

1. THE DECK DETERIORATION SHOWN ARE BASED ON LIMITED FIELD OBSERVATIONS AND BRIDGE SAFETY INSPECTION REPORT (02/26/2016). THE INFORMATION IS INTENDED TO BE USED AS A GUIDE AND DOES NOT NECESSARILY REFLECT THE CURRENT CONDITION OF THE STRUCTURE. THE EXACT LOCATION AND LIMITS OF DETERIORATED CONCRETE TO BE REPAIRED SHALL BE DETERMINED BY THE ENGINEER DURING CONSTRUCTION.
2. THE CONTRACTOR SHALL PROVIDE SAFE ACCESS FOR THE ENGINEER TO DELINEATE AND REVIEW THE REPAIR WORK. THE COST OF PROVIDING ACCESS SHALL BE INCLUDED IN THE COST OF APPROPRIATE REPAIR ITEMS.
3. DECK UNDERSIDE REPAIRS SHALL BE REPAIRED IN ACCORDANCE WITH "CLEAN AND COAT EXPOSED REINFORCING STEEL" DETAILS.
4. FOR "CLEAN AND COAT EXPOSED REINFORCING STEEL" REPAIR DETAILS, SEE DWG. NO. S-07.
5. FOR "FULL DEPTH PATCH" AND "PARTIAL DEPTH PATCH" DETAILS, SEE DWG. NOS. S-07 AND S-08.

REFERENCES:

1. SEE DWG. NOS. S-07 AND S-08 FOR DECK REPAIR DETAILS.
2. SEE DWG. NO. S-31 FOR SIDEWALK REPAIR DETAILS.
3. SEE DWG. NOS. S-32 TO S-34 FOR ABUTMENT NO. 1 DECK END AND BACKWALL MODIFICATION DETAILS.
4. SEE DWG. NO. S-37 FOR TEMPORARY PLATE DETAIL.

REV.	DATE	REVISION DESCRIPTION	SHEET NO.

THE INFORMATION, INCLUDING ESTIMATED QUANTITIES OF WORK, SHOWN ON THESE SHEETS IS BASED ON LIMITED INVESTIGATIONS BY THE STATE AND IS IN NO WAY WARRANTED TO INDICATE THE CONDITIONS OF ACTUAL QUANTITIES OF WORK WHICH WILL BE REQUIRED.

Plotted Date: 8/8/2017

DESIGNER/DRAFTER: D.C./S.C.
CHECKED BY: J.H.M. II
SCALE: 1" = 10'

STATE OF CONNECTICUT
DEPARTMENT OF TRANSPORTATION

Filename: ...\SB_MSH_1_174_402_BR_00468_S_30_DECK_PLAN.dgn

SIGNATURE/BLOCK:
Close, Jensen and Miller, P.C.
1137 Silas Deane Highway
Wethersfield, CT 06109

PROJECT TITLE:
BEAM END REPAIR AND BEARING REPLACEMENT IN DISTRICT 4

TOWN: THOMASTON

DRAWING TITLE: DECK PLAN BRIDGE NO. 00468

PROJECT NO. 174-402
DRAWING NO. S-30
SHEET NO. 03.30

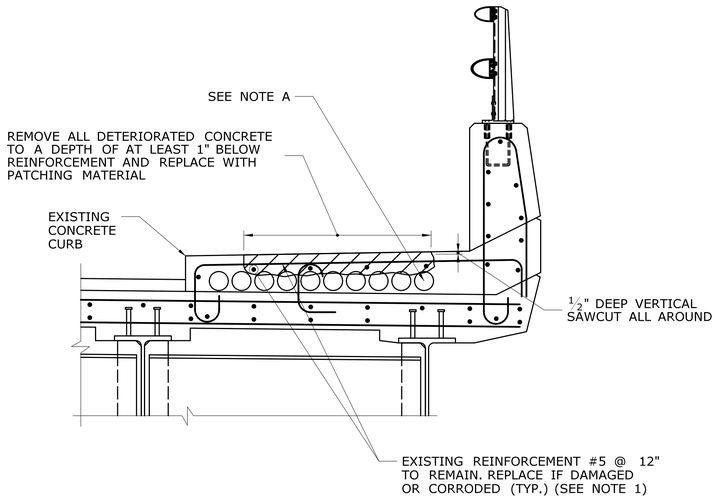

EXISTING SIDEWALK

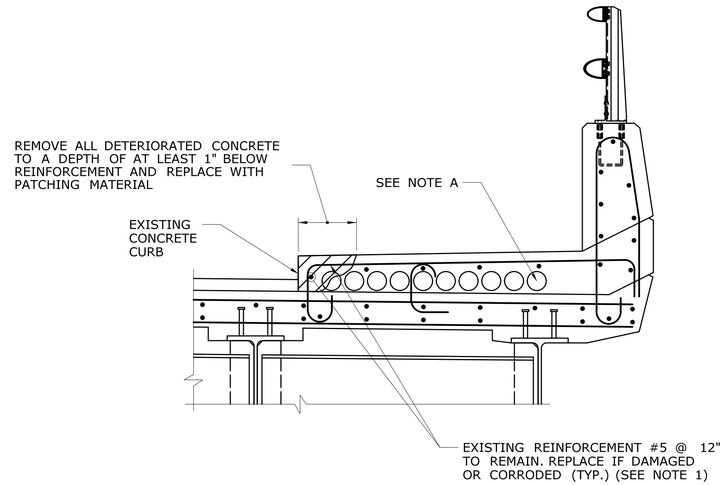

EXISTING SIDEWALK

SIDEWALK REPAIR NOTES:

1. AFTER REMOVAL OF DETERIORATED DECK CONCRETE, THE REINFORCEMENT MAY BE FOUND TO BE DETERIORATED PAST THE POINT THAT IT IS ACCEPTABLE TO REUSE. THE EXISTING REINFORCING SHALL BE REPLACED WHEN:
   - EXISTING REINFORCING HAS 25% OR MORE SECTION LOSS
   - EXISTING REINFORCING IS BROKEN
   - AS ORDERED BY THE ENGINEER
2. ALL EXPOSED REINFORCING STEEL TO REMAIN SHALL BE THOROUGHLY CLEANED AND REUSED IN ACCORDANCE WITH THE SPECIAL PROVISIONS "PARTIAL DEPTH PATCH".
3. REMOVE CONCRETE AS FAR AS REQUIRED TO EXPOSE SOUND REINFORCEMENT TO LAP THE NEW BARS. THE CONCRETE SHALL BE REMOVED TO A MINIMUM DEPTH OF 1" BELOW THE NEW BARS. REMOVAL IS TO STOP ONCE CONCRETE BEING REMOVED HAS FRACTURE LINES THAT PASS THROUGH AGGREGATE.
4. A CHISEL BIT SHALL BE USED FOR THE PNEUMATIC HAMMER. A POINTED BIT SHALL NOT BE USED.
5. MATCH EXISTING BAR SIZES AND SPACING FOR BOTH LONGITUDINAL AND TRANSVERSE BARS.
6. REINFORCEMENT SHALL CONFORM TO ASTM, GRADE 60 (EPOXY COATED).
7. THE COST OF REMOVAL OF THE DETERIORATED CONCRETE INCLUDING THE ½" SAWCUT, AND FURNISHING AND PLACING THE PATCHING MATERIAL SHALL BE INCLUDED FOR PAYMENT UNDER THE ITEM "PARTIAL DEPTH PATCH".
8. REPAIR OF DAMAGED REINFORCING STEEL SHALL BE INCLUDED FOR PAYMENT UNDER THE ITEMS "DEFORMED STEEL BARS - EPOXY COATED".
9. FOR ANODE PLACEMENT REQUIREMENTS SEE "EMBEDDED GALVANIC ANODE NOTES" ON DWG. NO. S-06.
10. FOR SPLICE LENGTHS, SEE "REINFORCING BAR SPLICE LENGTHS TABLE" ON DWG. NO. S-05.
11. COORDINATION WITH UTILITY COMPANIES SHALL BE MADE FOR ANY IMPACTS TO UTILITIES.

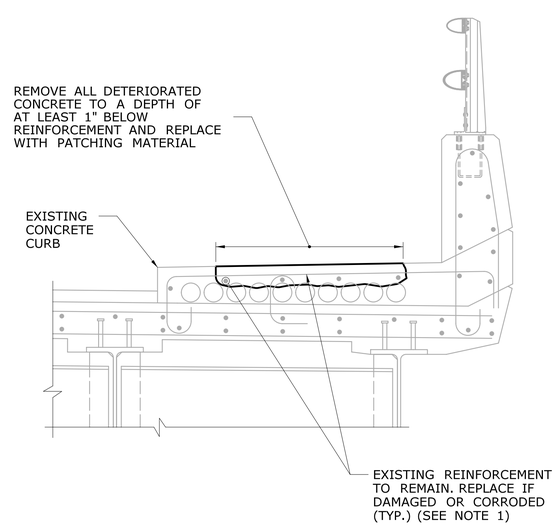

PROPOSED SIDEWALK

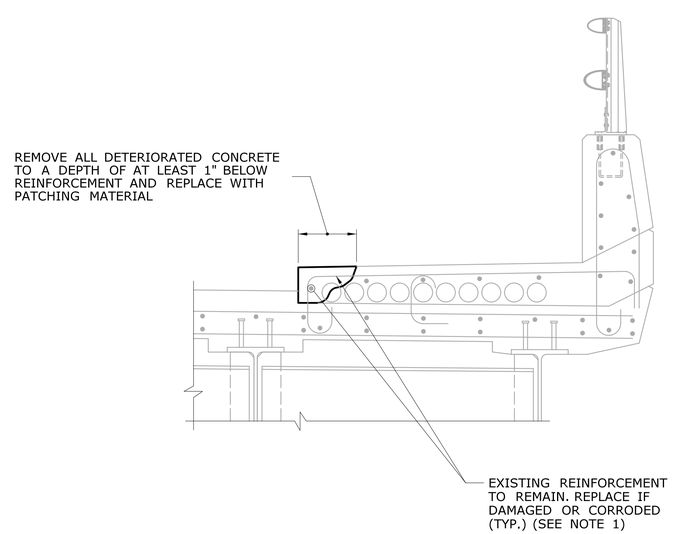

PROPOSED SIDEWALK

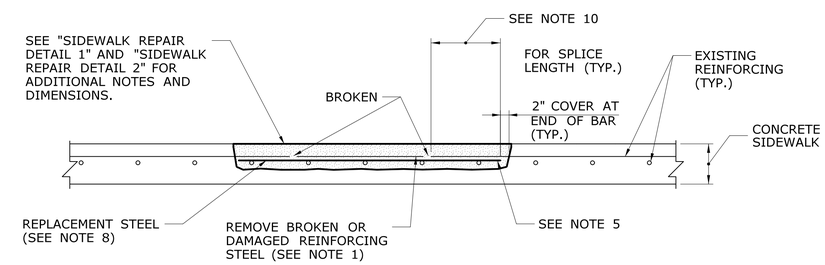

REPAIR OF DAMAGED REINFORCING STEEL

NOT TO SCALE

REFERENCE:

1. SEE DWG. S-30 FOR SIDEWALK REPAIR LOCATIONS.

NOTE A:

SIDEWALK TELEPHONE CONDUITS (S.N.E.T. CO.) ARE ONLY LOCATED IN SOUTH SIDEWALK.

SIDEWALK REPAIR DETAIL 1

SCALE: 1" = 1'-0"

SIDEWALK REPAIR DETAIL 2

SCALE: 1" = 1'-0"

REV.	DATE	REVISION DESCRIPTION	SHEET NO.

THE INFORMATION, INCLUDING ESTIMATED QUANTITIES OF WORK, SHOWN ON THESE SHEETS IS BASED ON LIMITED INVESTIGATIONS BY THE STATE AND IS IN NO WAY WARRANTED TO INDICATE THE CONDITIONS OF ACTUAL QUANTITIES OF WORK WHICH WILL BE REQUIRED.

Plotted Date: 8/8/2017

DESIGNER/DRAFTER: D.C./S.C.

CHECKED BY: J.H.M. II

SCALE AS NOTED

STATE OF CONNECTICUT
DEPARTMENT OF TRANSPORTATION

Filename: ...\SB_MSH_1_174_402_BR_00468_S_31_SWK_REPAIR.dgn

SIGNATURE/BLOCK:

Close, Jensen and Miller, P.C.
1137 Silas Deane Highway
Wethersfield, CT 06109

PROJECT TITLE:

BEAM END REPAIR AND BEARING REPLACEMENT IN DISTRICT 4

TOWN: **THOMASTON**

DRAWING TITLE: **SIDEWALK REPAIRS BRIDGE NO. 00468**

PROJECT NO. **174-402**

DRAWING NO. **S-31**

SHEET NO. **03.31**

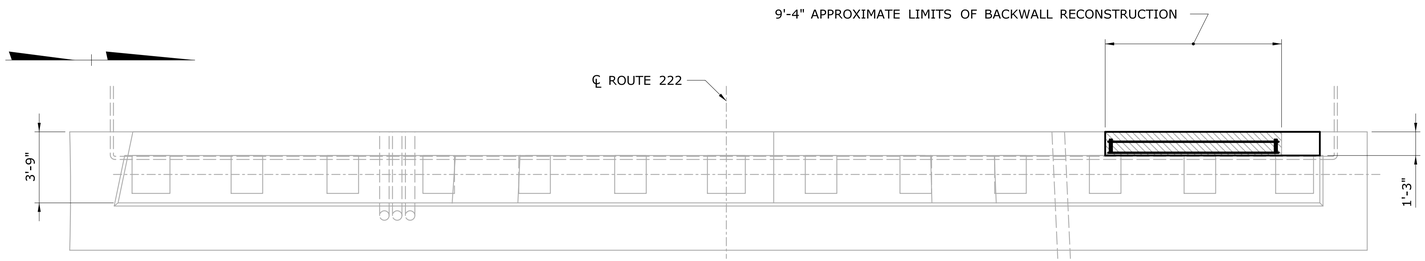

PLAN - BACKWALL RECONSTRUCTION ABUTMENT NO. 1

SCALE: 1/4" = 1'-0"

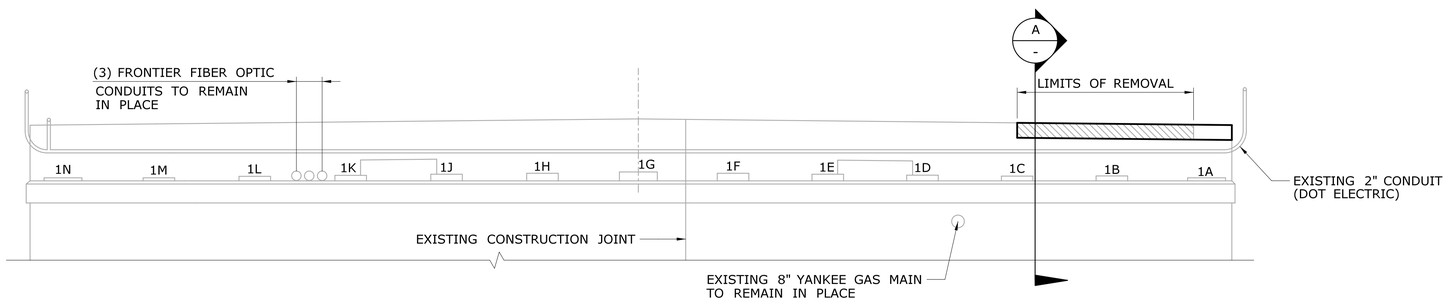

ELEVATION - BACKWALL RECONSTRUCTION ABUTMENT NO. 1

SCALE: 1/4" = 1'-0"

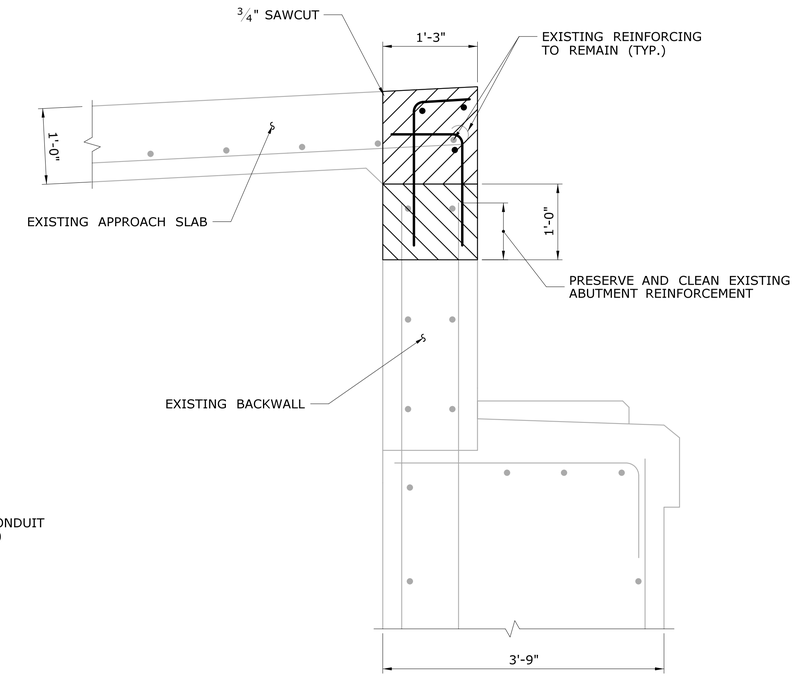

SECTION A -

SCALE: 1" = 1'-0"

DENOTES LIMITS OF REMOVAL

NOTE: ALL EXPOSED REINFORCING STEEL SHALL BE COATED WITH EPOXY RESIN.

REFERENCES:

1. SEE DWG. NOS. S-33 AND S-34 FOR BACKWALL, DECK, AND APPROACH SLAB REINFORCING DETAILS.
2. SEE DWG. NO. S-36 FOR TEMPORARY DECK PLATE DETAIL.

ABUTMENT & APPROACH SLAB MODIFICATION NOTES:

1. WHERE PROPOSED CONCRETE IS BEING PLACED AGAINST EXISTING CONCRETE, THE SURFACE OF EXISTING CONCRETE SHALL BE ROUGHENED TO 1/4" AMPLITUDE AND THOROUGHLY CLEANED PRIOR TO PLACING THE NEW CONCRETE. THIS WORK SHALL BE PAID FOR UNDER THE ITEM "RECONSTRUCT CONCRETE DECK AND BACKWALL" SEE SPECIAL PROVISIONS.
2. ALL EXPOSED REINFORCEMENT INTEGRATED INTO NEW WORK SHALL BE THOROUGHLY CLEANED PRIOR TO PLACEMENT OF NEW CONCRETE.
3. PROPOSED APPROACH SLAB MODIFICATION SHALL BE CAST TO MATCH THE EXISTING APPROACH SLAB ELEVATIONS.
4. ALL BACKWALL, ABUTMENT, AND APPROACH SLAB REPAIRS SHALL BE COMPLETED PRIOR TO JOINT INSTALLATION.
5. BITUMINOUS CONCRETE OVERLAY AND MEMBRANE WATERPROOFING SHALL BE REMOVED PRIOR TO DECK END RECONSTRUCTION. REMOVAL OF BITUMINOUS CONCRETE OVERLAY, MEMBRANE WATERPROOFING, AND JOINT MATERIAL SHALL BE PAID FOR UNDER THE ITEM "REMOVAL OF EXISTING WEARING SURFACE".
6. 2" RMC LOCATED ON THE FACE OF ABUTMENT NO. 1 BACKWALL SHALL TO BE TEMPORARILY SUPPORTED DURING DECK AND BACKWALL RECONSTRUCTION. THIS WORK SHALL BE PAID UNDER THE ITEM "PROTECTION AND SUPPORT OF EXISTING UTILITIES.

REV.	DATE	REVISION DESCRIPTION	SHEET NO.

THE INFORMATION, INCLUDING ESTIMATED QUANTITIES OF WORK, SHOWN ON THESE SHEETS IS BASED ON LIMITED INVESTIGATIONS BY THE STATE AND IS IN NO WAY WARRANTED TO INDICATE THE CONDITIONS OF ACTUAL QUANTITIES OF WORK WHICH WILL BE REQUIRED.

Plotted Date: 8/8/2017

DESIGNER/DRAFTER: D.C./S.C.
CHECKED BY: J.H.M. II
SCALE AS NOTED

STATE OF CONNECTICUT
DEPARTMENT OF TRANSPORTATION

Filename: ...\SB_MSH_1_174_402_BR_00468_S_32_DECK_REPAIR_1.dgn

SIGNATURE/BLOCK:
Close, Jensen and Miller, P.C.
1137 Silas Deane Highway
Wethersfield, CT 06109

PROJECT TITLE:
BEAM END REPAIR AND BEARING REPLACEMENT IN DISTRICT 4

TOWN: **THOMASTON**

DRAWING TITLE: **DECK END DETAILS - 1 BRIDGE NO. 00468**

PROJECT NO. **174-402**
DRAWING NO. **S-32**
SHEET NO. **03.32**

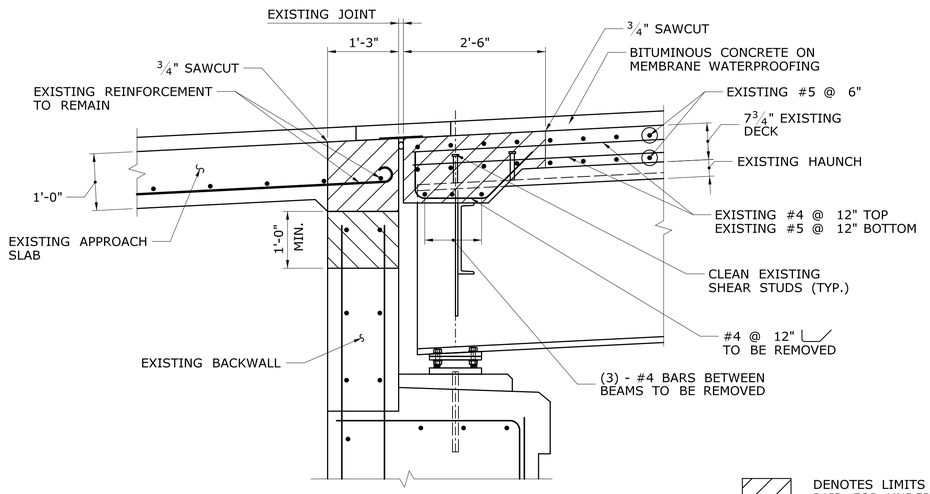

EXISTING CONDITION

DENOTES LIMITS OF CONCRETE REMOVAL, TO BE PAID FOR UNDER THE ITEM "RECONSTRUCT CONCRETE DECK AND BACKWALL"

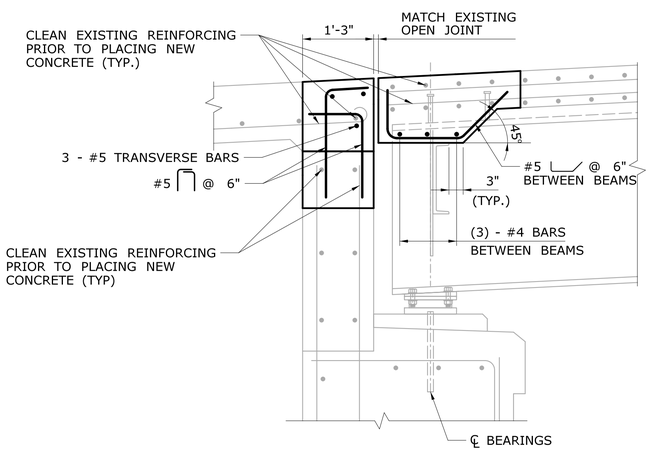

PROPOSED CONDITION A -

DECK END RECONSTRUCTION AT ABUTMENT NO. 1

NOTES:

1. THE NUMBER AND SPACING OF NEW REINFORCEMENT BARS TO MATCH EXISTING REINFORCEMENT.

NOTE: ALL EXPOSED REINFORCING STEEL SHALL BE COATED WITH EPOXY RESIN TO BE PAID FOR UNDER THE ITEM "RECONSTRUCT CONCRETE DECK AND BACKWALL"

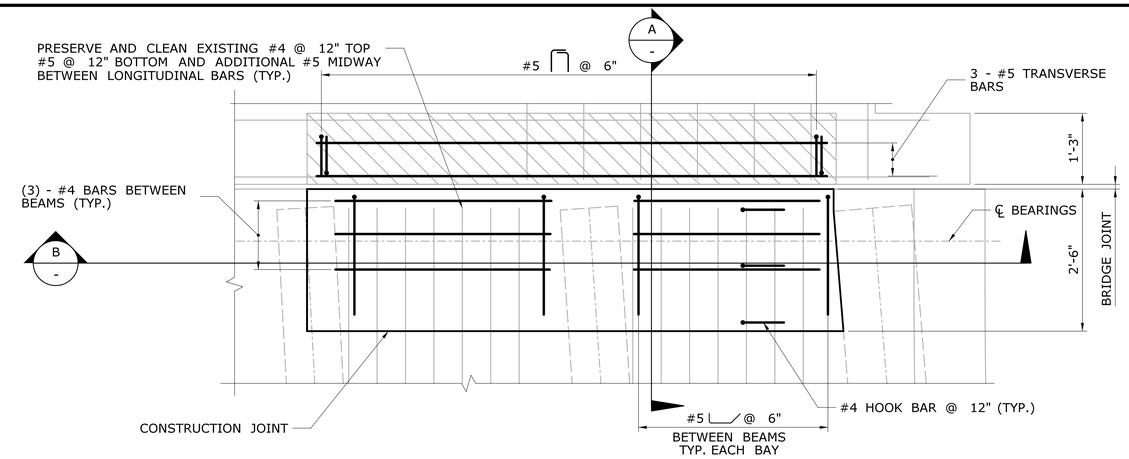

DECK END PARTIAL PLAN AT NORTH GUTTER

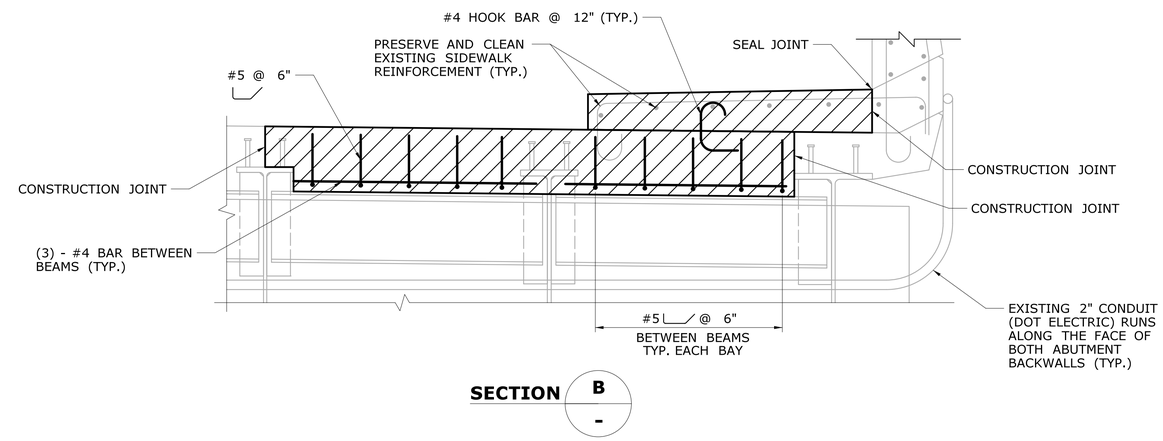

SECTION B -

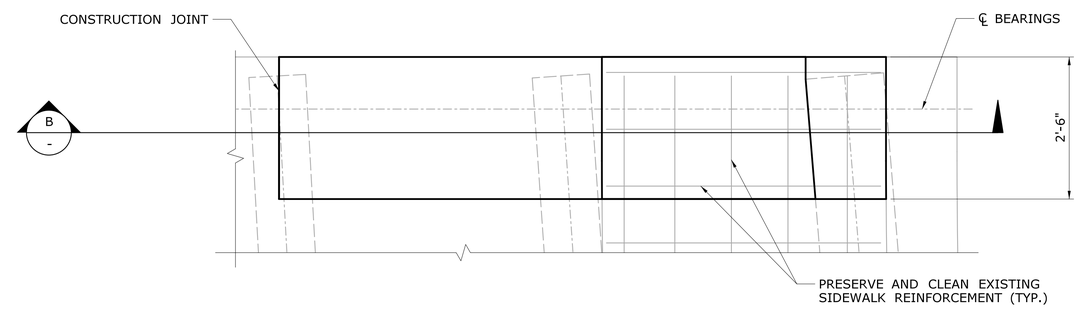

SIDEWALK PARTIAL PLAN AT NORTH GUTTER

REFERENCES:

1. SEE DWG. NOS. S-32 AND S-34 FOR APPROACH SLAB AND BACKWALL MODIFICATION DETAILS.
2. SEE DWG NO. S-32 FOR ABUTMENT AND APPROACH SLAB MODIFICATION NOTES.
3. SEE DWG. NO. S-36 FOR TEMPORARY PLATE DETAIL.

REV.	DATE	REVISION DESCRIPTION	SHEET NO.

THE INFORMATION, INCLUDING ESTIMATED QUANTITIES OF WORK, SHOWN ON THESE SHEETS IS BASED ON LIMITED INVESTIGATIONS BY THE STATE AND IS IN NO WAY WARRANTED TO INDICATE THE CONDITIONS OF ACTUAL QUANTITIES OF WORK WHICH WILL BE REQUIRED.

Plotted Date: 8/8/2017

DESIGNER/DRAFTER: D.C./S.C.
CHECKED BY: J.H.M. II
SCALE: 3/4" = 1'-0"

STATE OF CONNECTICUT
DEPARTMENT OF TRANSPORTATION

Filename: ...\SB_MSH_1_174_402_BR_00468_S_33_DECK_REPAIR_2.dgn

SIGNATURE/BLOCK:
Close, Jensen and Miller, P.C.
1137 Silas Deane Highway
Wethersfield, CT 06109

PROJECT TITLE:
BEAM END REPAIR AND BEARING REPLACEMENT IN DISTRICT 4

TOWN: THOMASTON

DRAWING TITLE: DECK END DETAILS - 2
BRIDGE NO. 00468

PROJECT NO. 174-402
DRAWING NO. S-33
SHEET NO. 03.33

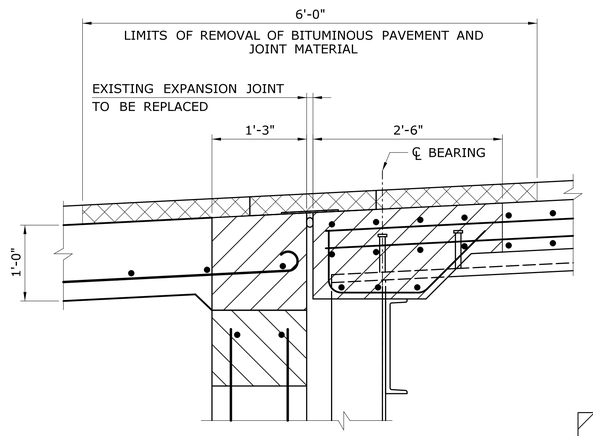

DENOTES LIMITS OF CONCRETE REMOVAL TO BE PAID FOR UNDER THE ITEM "RECONSTRUCT CONCRETE DECK AND BACKWALL"

EXISTING ABUTMENT NO. 1

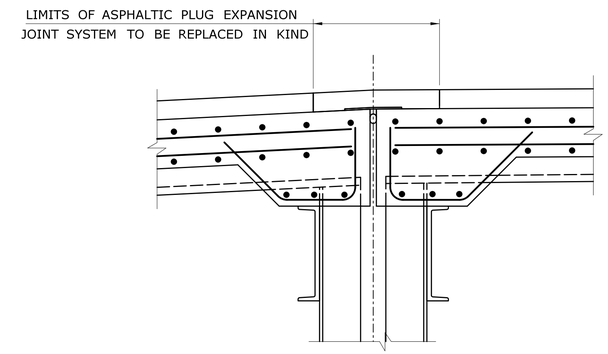

PIER

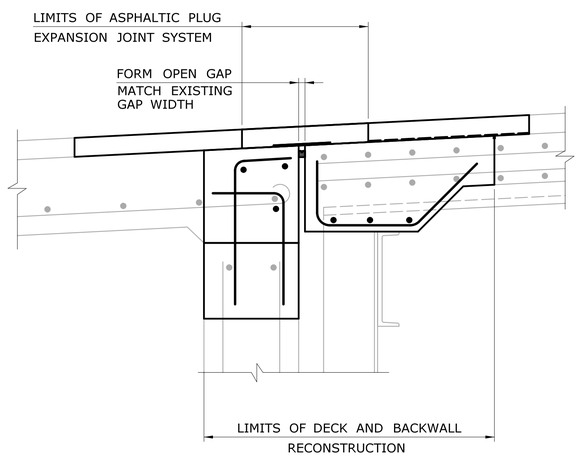

PROPOSED ABUTMENT NO. 1

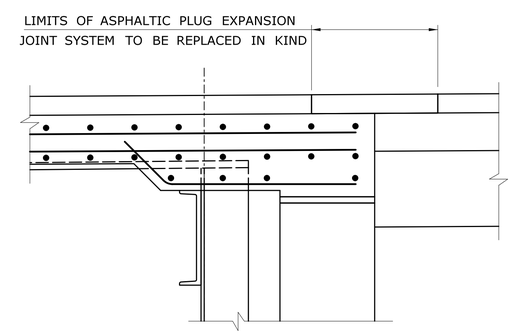

ABUTMENT NO. 2

REFERENCES:

1. SEE DWG. NOS. S-32 AND S-33 FOR DECK END, APPROACH SLAB AND BACKWALL MODIFICATION DETAILS.
2. SEE DWG NOS. S-09 TO S-11, S-14, AND S-15 FOR ASPHALTIC PLUG JOINT NOTES AND DETAILS.
3. SEE DWG. NO. S-37 FOR TEMPORARY PLATE DETAIL.

REV.	DATE	REVISION DESCRIPTION	SHEET NO.

THE INFORMATION, INCLUDING ESTIMATED QUANTITIES OF WORK, SHOWN ON THESE SHEETS IS BASED ON LIMITED INVESTIGATIONS BY THE STATE AND IS IN NO WAY WARRANTED TO INDICATE THE CONDITIONS OF ACTUAL QUANTITIES OF WORK WHICH WILL BE REQUIRED.

Plotted Date: 8/8/2017

DESIGNER/DRAFTER: D.C./S.C.
CHECKED BY: J.H.M. II
SCALE: 1" = 1'-0"

STATE OF CONNECTICUT
DEPARTMENT OF TRANSPORTATION

Filename: ...\SB_MSH_1_174_402_BR_00468_S_34_DECK_REPAIR_3.dgn

SIGNATURE/BLOCK:
Close, Jensen and Miller, P.C.
1137 Silas Deane Highway
Wethersfield, CT 06109

PROJECT TITLE:
BEAM END REPAIR AND BEARING REPLACEMENT IN DISTRICT 4

TOWN: **THOMASTON**

DRAWING TITLE: **DECK END DETAILS - 3 BRIDGE NO. 00468**

PROJECT NO. 174-402
DRAWING NO. S-34
SHEET NO. 03.34

REFERENCES:

1. SEE DWG NO. S-28 FOR FRAMING PLAN.
2. SEE DWG. NO. S-37 FOR METAL BRIDGE RAIL DETAILS.

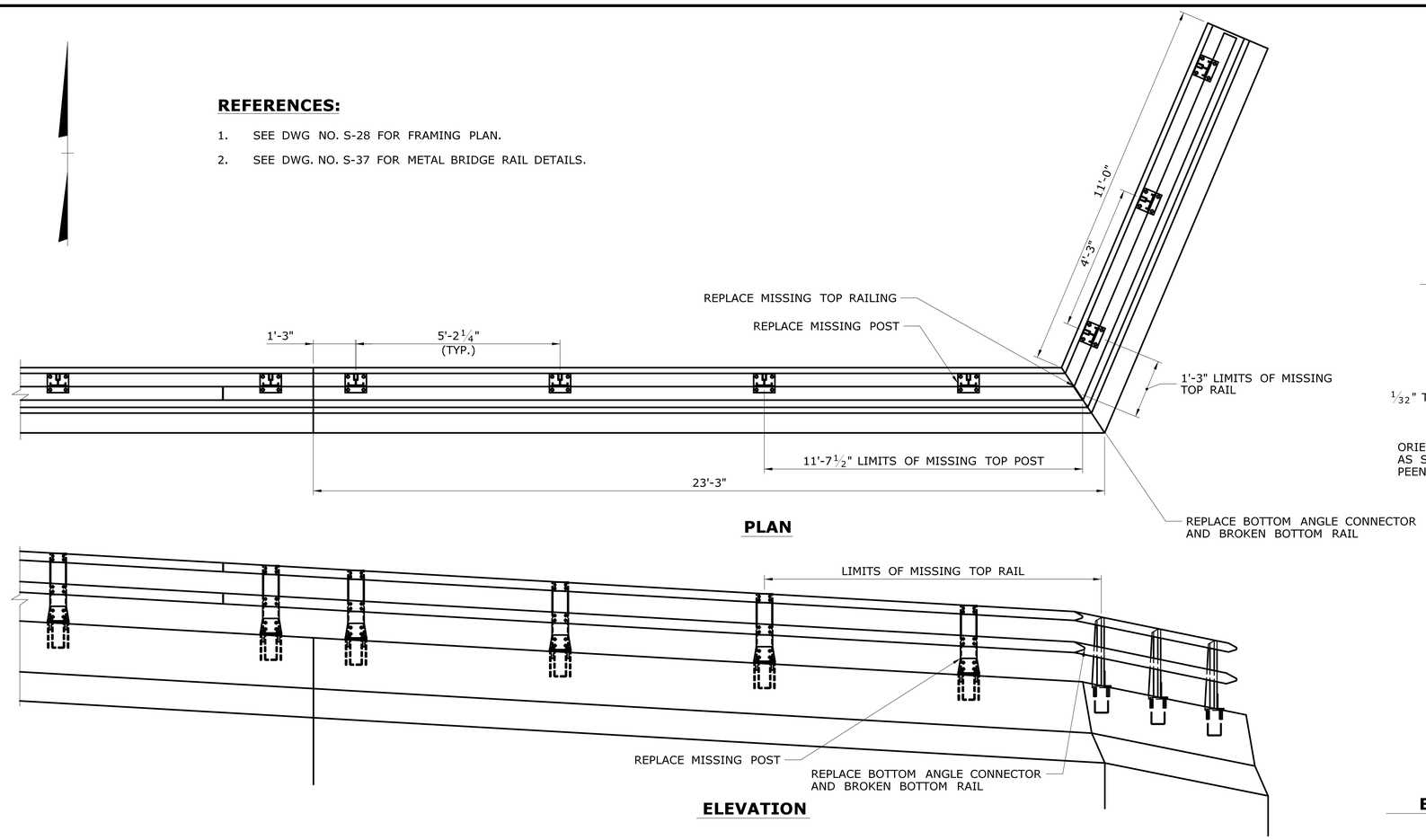

DETAIL FOR RAILING REPLACEMENT AT NORTH RAMP

SCALE: ½" = 1'-0"

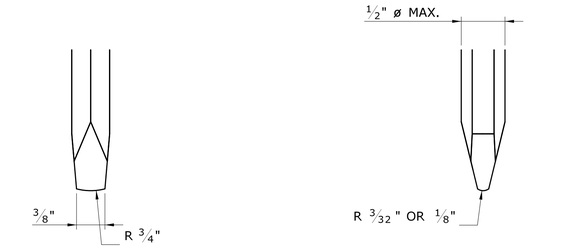

FRONT ELEVATION **SIDE ELEVATION**

PEENING TOOL

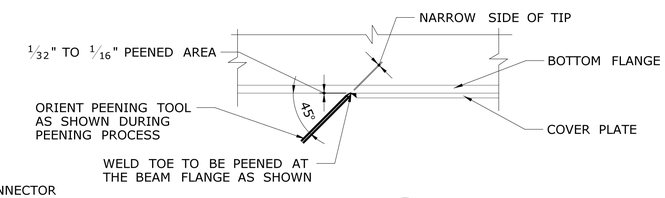

SECTION A

SCALE: 1" = 1'-0"

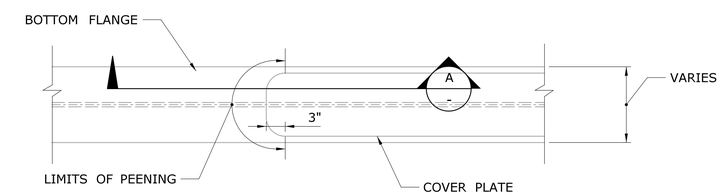

BOTTOM FLANGE COVER PLATE END WELD PEENING LIMITS

SCALE: 1" = 1'-0"

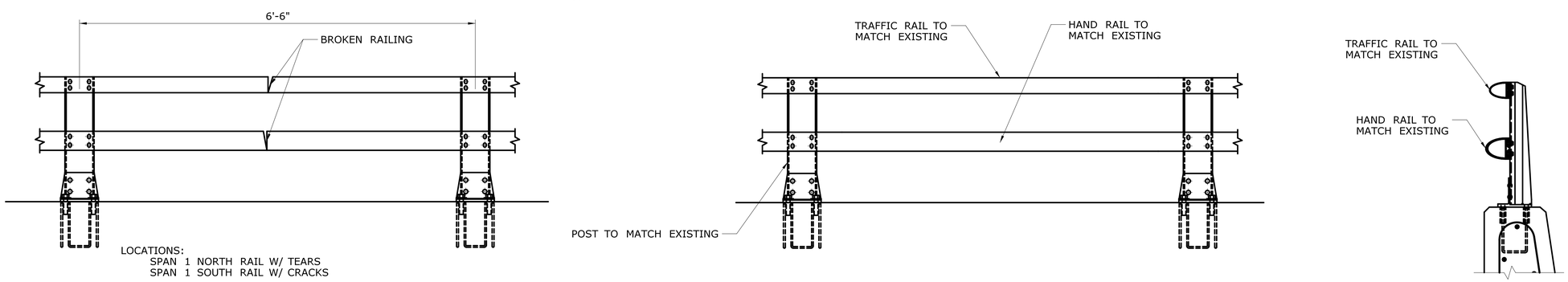

EXISTING CONDITION **ELEVATION** **FINAL CONDITION** **SECTION**

DETAILS FOR RAILING REPAIR

SCALE: 1" = 1'-0"

REV.	DATE	REVISION DESCRIPTION	SHEET NO.

THE INFORMATION, INCLUDING ESTIMATED QUANTITIES OF WORK, SHOWN ON THESE SHEETS IS BASED ON LIMITED INVESTIGATIONS BY THE STATE AND IS IN NO WAY WARRANTED TO INDICATE THE CONDITIONS OF ACTUAL QUANTITIES OF WORK WHICH WILL BE REQUIRED.

Plotted Date: 8/8/2017

DESIGNER/DRAFTER: D.C./S.C.
CHECKED BY: J.H.M. II
SCALE AS NOTED

STATE OF CONNECTICUT
DEPARTMENT OF TRANSPORTATION

Filename: ...\SB_MSH_1_174_402_BR_00468_S_35_MISC.dgn

SIGNATURE/BLOCK:
Close, Jensen and Miller, P.C.
1137 Silas Deane Highway
Wethersfield, CT 06109

PROJECT TITLE:
BEAM END REPAIR AND BEARING REPLACEMENT IN DISTRICT 4

TOWN: **THOMASTON**

DRAWING TITLE: **MISCELLANEOUS BRIDGE NO. 00468**

PROJECT NO. **174-402**
DRAWING NO. **S-35**
SHEET NO. **03.35**

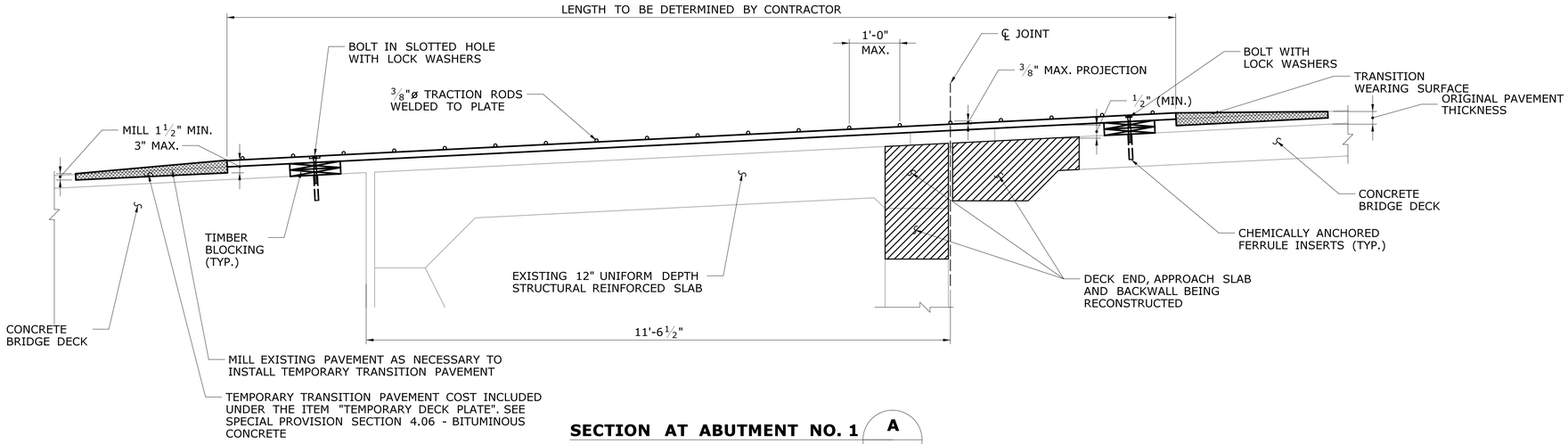

SECTION AT ABUTMENT NO. 1 (A / -)

SCALE: 3/4" = 1'-0"

NOTE:

1. FOR SIGN NO. 80-9801 SEE "SIGN FOR CONSTRUCTION AND PERMIT OPERATIONS" DWG. NO. TR-1220_01.

REFERENCES:

1. SEE DWG. NOS. S-32 TO S-34 FOR DECK AND BACKWALL RECONSTRUCTION DETAILS.

TEMPORARY DECK PLATE NOTES:

1. LONG DURATION STAGED CONSTRUCTION IS NOT ALLOWED. CONSTRUCTION OF JOINTS SHALL OCCUR DURING OFF-PEAK HOURS. THE ROADWAY SHALL BE OPENED TO TRAFFIC DURING PEAK HOURS IN ACCORDANCE WITH THE SPECIAL PROVISION "PROSECUTION AND PROGRESS".

2. A SUGGESTED DETAIL FOR THE TEMPORARY BRIDGING PLATE IS SHOWN ON THIS SHEET. THE CONTRACTOR SHALL DESIGN AND DETAIL A METHOD TO MAINTAIN TRAFFIC DURING PEAK HOURS USING A TEMPORARY REMOVABLE STEEL BRIDGING PLATE AND SUBMIT THE DESIGN AND CALCULATIONS FOR REVIEW. THE DESIGN SHALL BE STAMPED BY A PROFESSIONAL ENGINEER LICENSED IN THE STATE OF CONNECTICUT.

3. THE TEMPORARY BRIDGING PLATE SHALL BE PAID FOR UNDER THE ITEM "TEMPORARY DECK PLATE". THIS ITEM INCLUDES THE COST OF ALL NECESSARY WORK REQUIRED TO INSTALL, MAINTAIN AND REMOVE THE TEMPORARY BRIDGING PLATE.

4. THE DESIGN SHOULD SATISFY THE FOLLOWING CONDITIONS AT A MINIMUM:
   - A. THE PLATE SHOULD BE REMOVABLE AND REINSTALLABLE.
   - B. LOCK-WASHERS OR OTHER MEANS SHOULD BE USED TO PREVENT THE BOLTS FROM COMING LOOSE DUE TO THE DYNAMIC EFFECTS OF VEHICULAR TRAFFIC.
   - C. THE PLATE SHOULD BE ABLE TO ACCOMMODATE THE ANTICIPATED THERMAL MOVEMENT THAT IS LIKELY TO OCCUR DURING CONSTRUCTION.
   - D. NO PORTION OF THE PLATE SHOULD PROJECT MORE THAN 3/8" FROM THE TOP OF THE RIDING SURFACE.
   - E. THE DEFLECTION OF THE PLATE SHOULD NOT EXCEED "L/400". WHERE "L" IS THE SPAN LENGTH BETWEEN SUPPORTS.
   - F. A MINIMUM OF 1/2" SHALL BE MAINTAINED BETWEEN THE TOP OF DECK/HEADERS AND THE BOTTOM OF THE STEEL PLATE AT ALL TIMES.
   - G. IN THE EVENT THAT THE TOP OF THE PLATE WILL PROJECT ABOVE THE RIDING SURFACE, TAPERED TEMPORARY WILL BE REQUIRED TO ALLOW FOR A SMOOTH TRANSITION FOR TRAFFIC AND AVOID A "BUMP" IN THE ROADWAY.
   - H. A MINIMUM OF 2'-0" (PERPENDICULAR TO TRAFFIC) SHALL BE MAINTAINED FROM THE EDGE OF THE TEMPORARY PLATE TO THE NEAREST EDGE OF THE LANE CARRYING TRAFFIC.
   - I. TRANSITIONS/WEDGE PAVEMENT IN APPROACHES SHALL BE AS NOTED IN SECTION 4.06%. SEE SPECIAL PROVISIONS. TRANSITIONS/WEDGE PAVEMENT SHALL BE PROVIDED IN BOTH DIRECTIONS (PARALLEL AND PERPENDICULAR TO TRAFFIC)
   - J. HEIGHT FROM THE TOP OF THE TEMPORARY STEEL PLATE TO THE ORIGINAL RIDING SURFACE SHALL NOT EXCEED 3".
   - K. THE MINIMUM PLATE WIDTH TRANSVERSE TO TRAFFIC SHALL BE 4'-0".
   - L. SEE SPECIAL PROVISIONS FOR DESIGN WHEEL LOAD.

5. SEE SPECIAL PROVISION "TEMPORARY DECK PLATE" FOR ADDITIONAL REQUIREMENTS.

6. THE DETAIL FOR THE TEMPORARY DECK PLATE SHOULD BE ABLE TO ACCOMMODATE CROSS-SLOPES ON THE BRIDGE AND BE ABLE TO ACCOMMODATE ANCHOR INSTALLATION TOLERANCES IN BOTH LONGITUDINAL AND TRANSVERSE DIRECTIONS.

7. TEMPORARY DECK PLATES WILL NOT BE APPROVED FOR USE IN JOINTS WHERE DECK RECONSTRUCTION IS NOT REQUIRED.

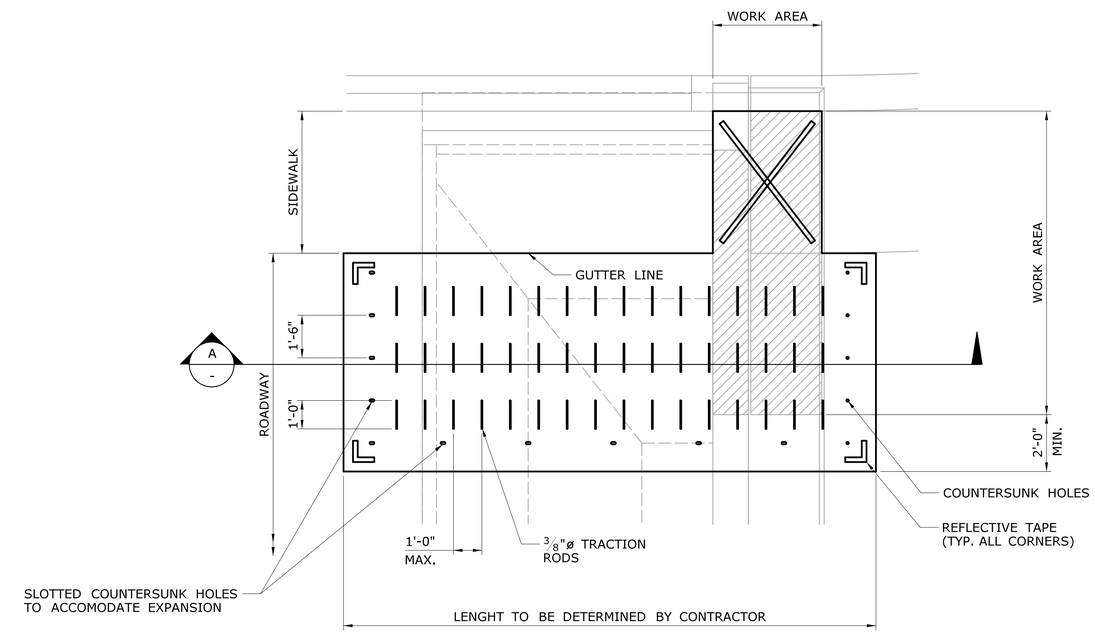

PLAN

SUGGESTED DECK COVER PLATE

SCALE: 3/8" = 1'-0"

REV.	DATE	REVISION DESCRIPTION	SHEET NO.

THE INFORMATION, INCLUDING ESTIMATED QUANTITIES OF WORK, SHOWN ON THESE SHEETS IS BASED ON LIMITED INVESTIGATIONS BY THE STATE AND IS IN NO WAY WARRANTED TO INDICATE THE CONDITIONS OF ACTUAL QUANTITIES OF WORK WHICH WILL BE REQUIRED.

Plotted Date: 8/8/2017

DESIGNER/DRAFTER: D.C./S.C.

CHECKED BY: J.H.M. II

SCALE AS NOTED

STATE OF CONNECTICUT
DEPARTMENT OF TRANSPORTATION

Filename: ..\SB_MSH_1_174_402_BR_00468_S_36_TEMP_PLATE.dgn

SIGNATURE/BLOCK:

Close, Jensen and Miller, P.C.
1137 Silas Deane Highway
Wethersfield, CT 06109

PROJECT TITLE:

BEAM END REPAIR AND BEARING REPLACEMENT IN DISTRICT 4

TOWN: **THOMASTON**

DRAWING TITLE: **TEMP. PLATE DETAIL BRIDGE NO. 00468**

PROJECT NO. **174-402**

DRAWING NO. **S-36**

SHEET NO. **03.36**

THIS SHEET NOT CORRECTED

F.W.H.A. REGION	STATE	TOWN	FED. AID PROJ. NO.	PROJ. NO.	YEAR	ROUTE NO.	SHEET NO.	TOTAL SHEETS
1	CONN	THOMASTON	BHX-6140(1)	140-158	1999	222	32	32

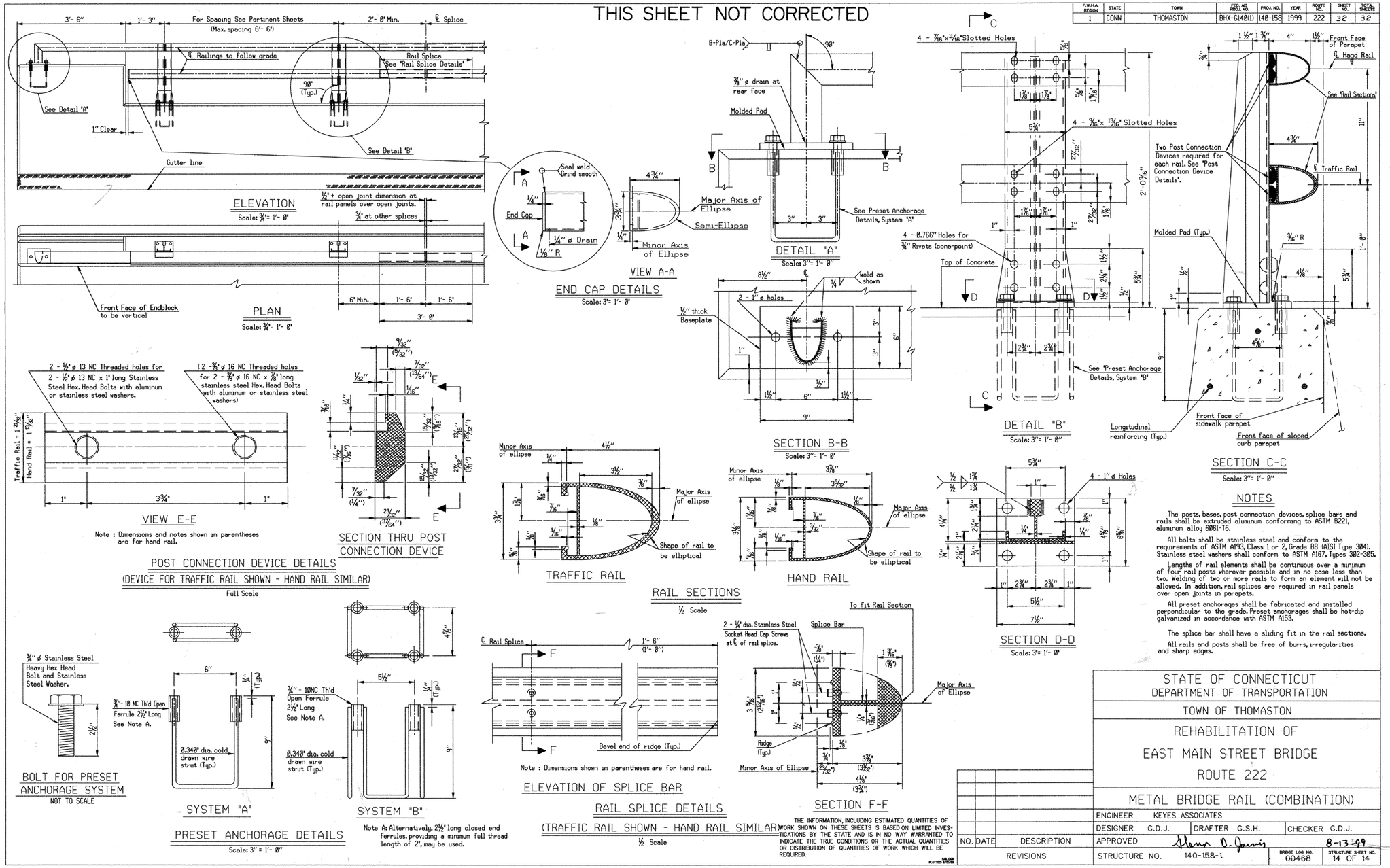

NOTES

The posts, bases, post connection devices, splice bars and rails shall be extruded aluminum conforming to ASTM B221, aluminum alloy 6061-T6.

All bolts shall be stainless steel and conform to the requirements of ASTM A193, Class 1 or 2, Grade B8 (AISI Type 304). Stainless steel washers shall conform to ASTM A167, Types 302-305.

Lengths of rail elements shall be continuous over a minimum of four rail posts wherever possible and in no case less than two. Welding of two or more rails to form an element will not be allowed. In addition, rail splices are required in rail panels over open joints in parapets.

All preset anchorages shall be fabricated and installed perpendicular to the grade. Preset anchorages shall be hot-dip galvanized in accordance with ASTM A153.

The splice bar shall have a sliding fit in the rail sections.

All rails and posts shall be free of burrs, irregularities and sharp edges.

THE INFORMATION, INCLUDING ESTIMATED QUANTITIES OF WORK SHOWN ON THESE SHEETS IS BASED ON LIMITED INVESTIGATIONS BY THE STATE AND IS IN NO WAY WARRANTED TO INDICATE THE TRUE CONDITIONS OR THE ACTUAL QUANTITIES OR DISTRIBUTION OF QUANTITIES OF WORK WHICH WILL BE REQUIRED.

STATE OF CONNECTICUT
DEPARTMENT OF TRANSPORTATION

TOWN OF THOMASTON

REHABILITATION OF
EAST MAIN STREET BRIDGE
ROUTE 222

METAL BRIDGE RAIL (COMBINATION)

NO.	DATE	DESCRIPTION

GENERAL NOTES:

TRAFFIC: ALL WORK SHALL BE DONE IN ACCORDANCE WITH THE SPECIAL PROVISIONS, "MAINTENANCE AND PROTECTION OF TRAFFIC" & "PROSECUTION AND PROGRESS" AND "DETOUR PLANS".

ACCESS: THE CONTRACTOR SHALL PROVIDE ACCESS AND PROTECTION TO THE WORK AREAS BENEATH THE BRIDGE UTILIZING SCAFFOLDING, UNDER THE BRIDGE WORK PLATFORMS, SAFETY NETS, LADDERS AND UNDER BRIDGE INSPECTION EQUIPMENT AS REQUIRED. THIS WORK SHALL BE DESIGNED BY A PROFESSIONAL ENGINEER EMPLOYED BY THE CONTRACTOR. THE DESIGN SHALL BE IN ACCORDANCE WITH THE AASHTO GUIDE SPECIFICATION FOR BRIDGE TEMPORARY WORKS TO SUIT THE CONTRACTOR'S MEANS AND METHODS OF CONSTRUCTION. PAYMENT TO BE INCLUDED UNDER THE RESPECTIVE ITEM. SEE CONTRACT SPECIAL PROVISIONS FOR ADDITIONAL INFORMATION.

UTILITIES: THE CONTRACTOR SHALL VERIFY THE SIZE AND LOCATION OF ALL UTILITIES WITHIN THE PROJECT LIMITS PRIOR TO THE START OF CONSTRUCTION AND SHALL PROTECT ALL EXISTING UTILITIES LOCATED WITHIN THE VICINITY OF THE CONSTRUCTION SITE. THE CONTRACTOR SHALL TAKE NECESSARY PRECAUTIONS WHEN WORKING NEAR UTILITIES SO AS TO NOT DISTURB THEM OR PLACE ANY LOAD OR EQUIPMENT ON THEM. ALL UTILITY COMPANIES SHALL BE NOTIFIED 48 HOURS PRIOR TO ANY WORK AFFECTING CABLES, CONDUITS, OR OTHER UTILITIES.

ALL STEEL ELEMENTS WITHIN THE PAINTING LIMITS OF BEAM ENDS, INCLUDING BEARING STIFFENERS, CONNECTION PLATES, END DIAPHRAGMS, AND ALL ELEMENTS OF BEARINGS EXCLUDING BRONZE SURFACES SHALL BE PAINTED.

PAINT REMOVAL AND PAINTING LIMITS OF BEAM ENDS SHALL BE INCLUDED FOR PAYMENT UNDER THE ITEM "ABRASIVE BLAST CLEANING AND FIELD PAINTING OF BEAM ENDS (SITE NO. 2)"

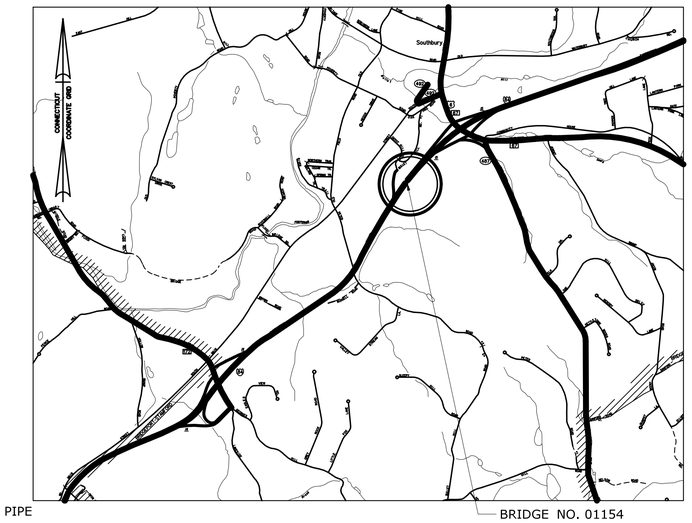

LOCATION MAP SITE NO. 2

SCALE: 1" = 2000'

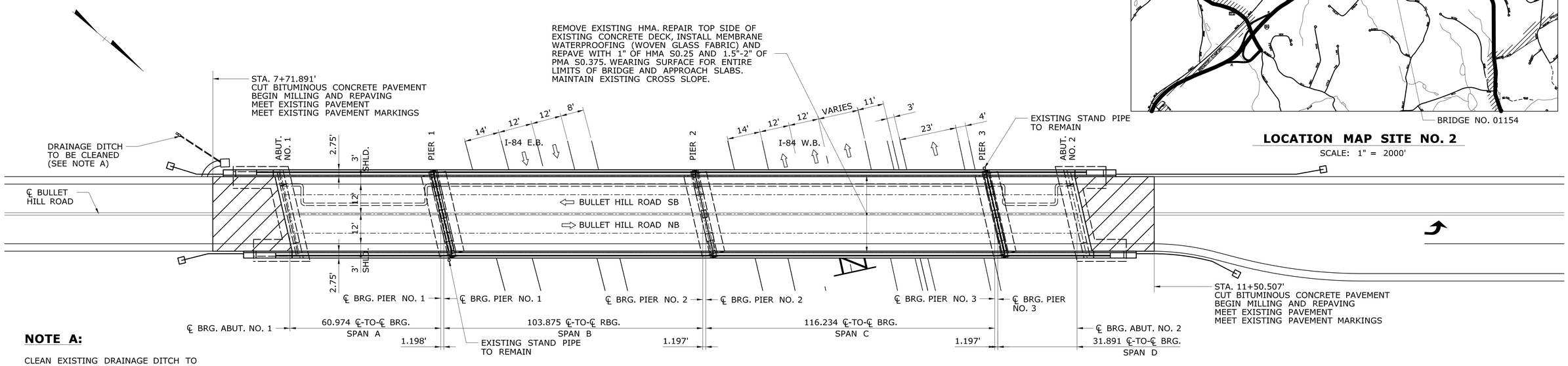

PLAN BRIDGE NO. 01154, SITE NO. 2

BULLET HILL ROAD OVER I-84

SCALE: 1" = 20'

NOTE A:

CLEAN EXISTING DRAINAGE DITCH TO BE PAID FOR UNDER THE ITEM "CLEAN DRAINAGE DITCH" (SEE SPECIAL PROVISIONS).

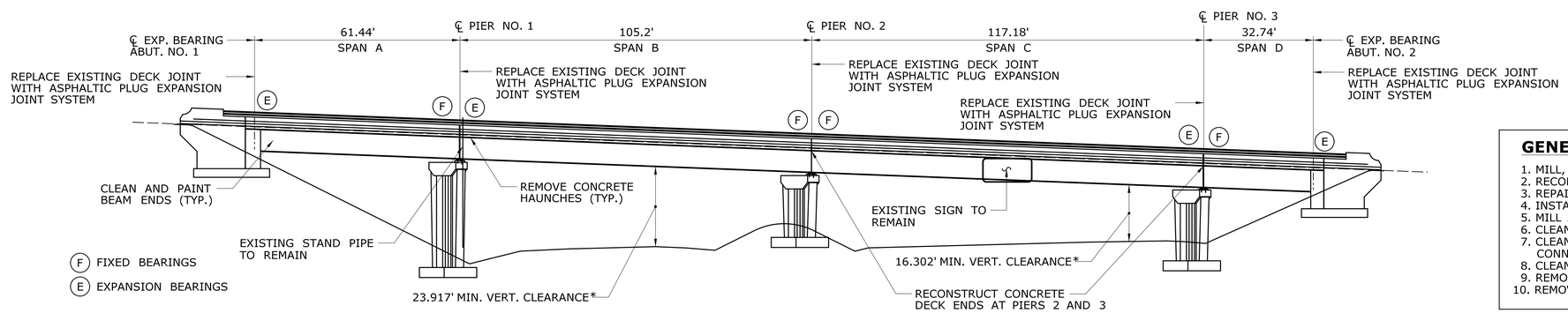

ELEVATION

SCALE: 1" = 20'

* MINIMUM 14'-6" VERTICAL CLEARANCE SHALL BE MAINTAINED DURING ALL PHASES OF CONSTRUCTION

GENERAL DESCRIPTON OF WORK:

1. MILL, PATCH, MEMBRANE WATERPROOF, AND PAVE DECK.
2. RECONSTRUCT CONCRETE DECK ENDS OVER PIERS 2 AND 3.
3. REPAIR BRIDGE RAIL.
4. INSTALL NEW ASPHALTIC PLUG JOINTS.
5. MILL AND PAVE APPROACHES.
6. CLEAN DRAINAGE DITCH AT SOUTHEAST CORNER.
7. CLEAN AND PAINT BEAM ENDS, DIAPHRAGMS, STIFFENERS, CONNECTION PLATES, AND BEARINGS.
8. CLEAN, PAINT, AND REPAIR STRUCTURAL STEEL.
9. REMOVE VEGETATION FROM NORTH WINGWALLS.
10. REMOVE CONCRETE HAUNCHES OVER I-84.

REV.	DATE	REVISION DESCRIPTION	SHEET NO.

THE INFORMATION, INCLUDING ESTIMATED QUANTITIES OF WORK, SHOWN ON THESE SHEETS IS BASED ON LIMITED INVESTIGATIONS BY THE STATE AND IS IN NO WAY WARRANTED TO INDICATE THE CONDITIONS OF ACTUAL QUANTITIES OF WORK WHICH WILL BE REQUIRED.

Plotted Date: 8/8/2017

DESIGNER/DRAFTER: D.C./S.C.

CHECKED BY: J.H.M. II

SCALE AS NOTED

STATE OF CONNECTICUT
DEPARTMENT OF TRANSPORTATION

Filename: ...\SB_MSH_2_174_402_BR_01154_S_38_GEN_PLAN.dgn

SIGNATURE/ BLOCK:

Close, Jensen and Miller, P.C.
1137 Silas Deane Highway
Wethersfield, CT 06109

PROJECT TITLE:

BEAM END REPAIR AND BEARING REPLACEMENT IN DISTRICT 4

TOWN: **SOUTHBURY**

DRAWING TITLE: **GENERAL PLAN BRIDGE NO. 01154**

PROJECT NO. **174-402**

DRAWING NO. **S-38**

SHEET NO. **03.38**

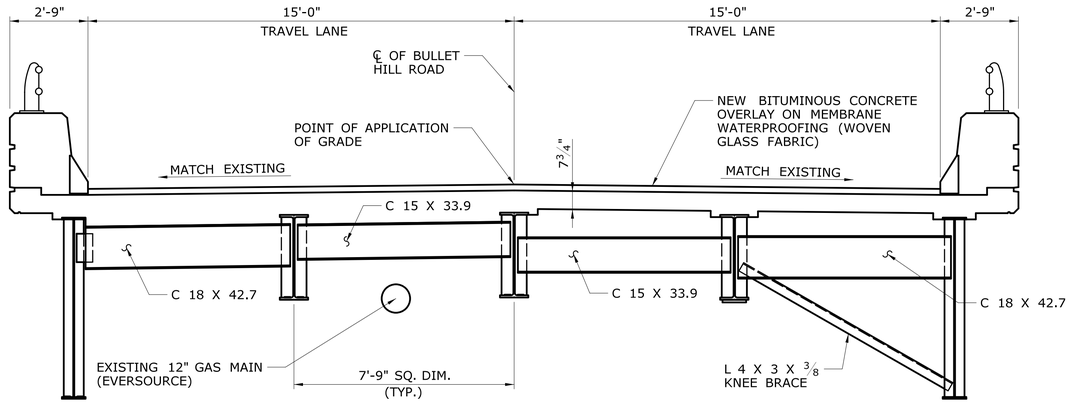

TYPICAL END DIAPHRAGMS **TYPICAL INTERIOR DIAPHRAGMS**

TYPICAL CROSS SECTION OF SPANS A & D

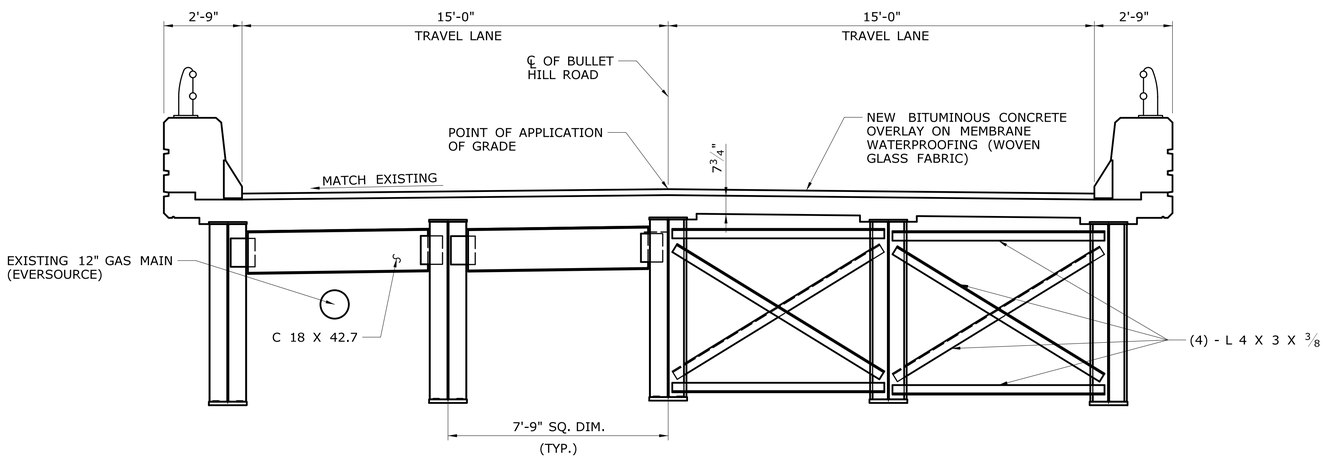

TYPICAL END DIAPHRAGMS **TYPICAL INTERIOR DIAPHRAGMS**

TYPICAL CROSS SECTION OF SPANS B & C

NOTES:

1. BITUMINOUS CONCRETE OVERLAY: THIS SHALL CONSIST OF TWO LIFTS. THE FIRST SHALL BE 1 INCH THICK OF HMA S0.25,TRAFFIC LEVEL 2, AND THE SECOND SHALL BE 1.5"-2" THICK OF PMA S0.375 TRAFFIC LEVEL 3 TO MATCH THE EXISTING CONDITION.
2. TRAFFIC: ALL WORK SHALL BE DONE IN ACCORDANCE WITH THE SPECIAL PROVISIONS, "MAINTENANCE AND PROTECTION OF TRAFFIC" AND "PROSECUTION AND PROGRESS."

REFERENCES:

1. SEE DWG. NOS. S-43 AND S-44 FOR REMAINING MEMBER SIZES.

REV.	DATE	REVISION DESCRIPTION	SHEET NO.

THE INFORMATION, INCLUDING ESTIMATED QUANTITIES OF WORK, SHOWN ON THESE SHEETS IS BASED ON LIMITED INVESTIGATIONS BY THE STATE AND IS IN NO WAY WARRANTED TO INDICATE THE CONDITIONS OF ACTUAL QUANTITIES OF WORK WHICH WILL BE REQUIRED.

Plotted Date: 8/8/2017

DESIGNER/DRAFTER: D.C./S.C.
CHECKED BY: J.H.M. II
SCALE: 3/8" = 1'-0"

STATE OF CONNECTICUT
DEPARTMENT OF TRANSPORTATION

Filename: ...\SB_MSH_2_174_402_BR_01154_S_39_SECTIONS.dgn

SIGNATURE/ BLOCK:
Close, Jensen and Miller, P.C.
1137 Silas Deane Highway
Wethersfield, CT 06109

PROJECT TITLE: BEAM END REPAIR AND BEARING REPLACEMENT IN DISTRICT 4

TOWN: SOUTHBURY

DRAWING TITLE: TYPICAL SECTIONS BRIDGE NO. 01154

PROJECT NO. 174-402
DRAWING NO. S-39
SHEET NO. 03.39

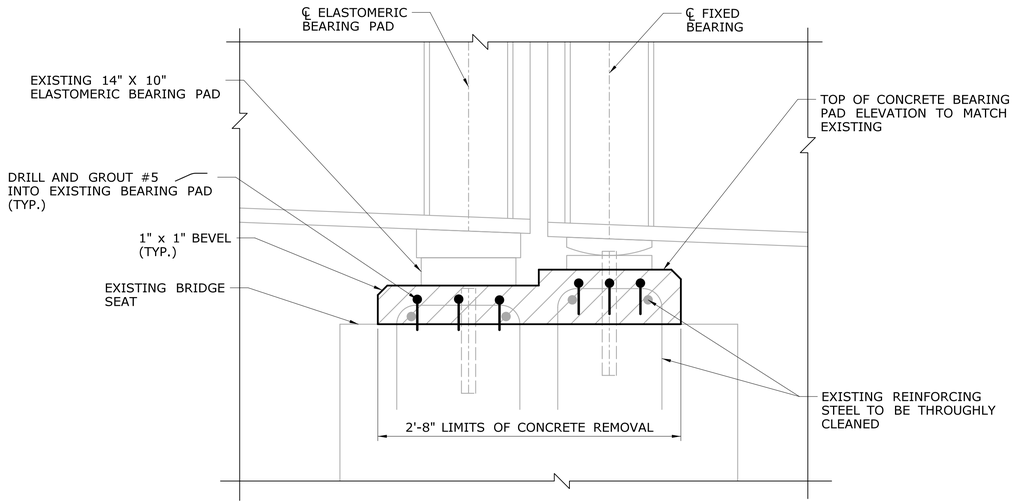

ELEVATION

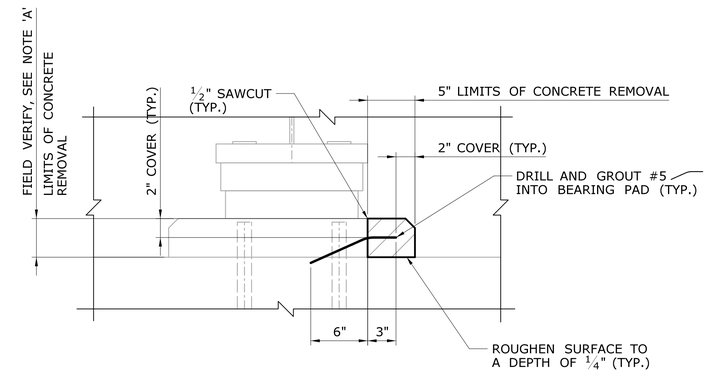

SECTION A / -

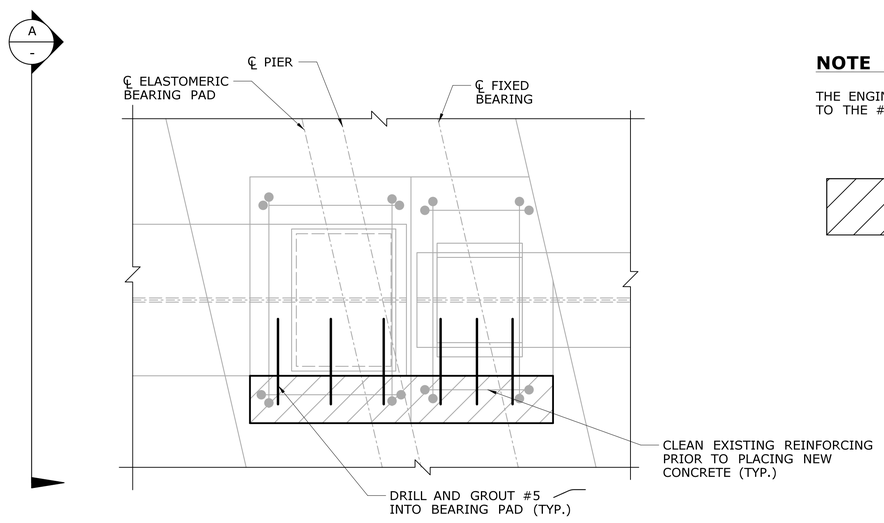

PLAN

NOTE 'A':

THE ENGINEER SHALL BE NOTIFIED IF THE 2" TOP COVER TO THE #5 BARS CAN NOT BE PROVIDED.

DENOTES LIMITS OF CONCRETE REMOVAL

CONCRETE BEARING PAD REPAIR NOTES:

1. PROVIDE A ½" SAWCUT ALONG PERIMETER OF REPAIR AREA. NEW CONCRETE TO MATCH EXISTING BEARING PAD PROFILE.
2. MAXIMUM 15 POUND PNEUMATIC HAMMER TO BE USED ADJACENT TO REINFORCING TO REMAIN.
3. AFTER REMOVAL OF DETERIORATED CONCRETE, THE REINFORCEMENT MAY BE FOUND TO BE DETERIORATED PAST THE POINT THAT IT IS ACCEPTABLE TO REUSE. THE EXISTING REINFORCING SHALL BE REPLACED WHEN:
   - EXISTING REINFORCING HAS LOST 25% OR MORE OF THE ORIGINAL SECTIONAL AREA.
   - EXISTING REINFORCING IS BROKEN.
   - AS ORDERED BY THE ENGINEER.
4. ALL EXPOSED REINFORCING STEEL TO REMAIN SHALL BE THOROUGHLY CLEANED OF ALL CONCRETE, POWDER-LIKE RUST, OIL, DUST, AND LOOSE PARTICLES.
5. CONCRETE SHALL BE REMOVED TO THE LIMITS SHOWN ON THE PLAN. IF SOUND CONCRETE IS NOT ENCOUNTERED AT THE LIMITS OF REMOVAL, THE ENGINEER SHALL BE NOTIFIED IMMEDIATELY.
6. THE CONTRACTOR SHALL TAKE ALL PRECAUTIONS TO AVOID DRILLING EXISTING REINFORCING. IF EXISTING REINFORCING BARS ARE ENCOUNTERED DURING THE DRILLING OPERATIONS, THE HOLES SHALL BE RELOCATED TO CLEAR THE EXISTING REINFORCEMENT. ABANDONED HOLES SHALL BE FILLED WITH CHEMICAL ANCHORAGE MATERIAL.
7. DEPTH AND DIAMETER OF THE DRILL HOLES FOR THE CHEMICAL ANCHORAGE TO BE AS REQUIRED BY THE CHEMICAL ADHESIVE MANUFACTURER TO DEVELOP FULL STRENGTH OF THE BAR.
8. MATCH EXISTING BAR SIZES AND SPACING FOR BOTH LONGITUDINAL AND TRANSVERSE BARS.
9. REINFORCEMENT SHALL BE COATED AND CONFORM TO ASTM A615, GRADE 60 (EPOXY-COATED).
10. THE COST OF REMOVAL OF CONCRETE, INCLUDING THE ½" SAWCUT, AND FURNISHING AND PLACING OF CONCRETE AND NEW REINFORCEMENT AT THE CONCRETE BEARING PAD SHALL BE INCLUDED FOR PAYMENT UNDER THE ITEM "REPAIR OF BEARING PAD".
11. THE CONTRACTOR SHALL NOT PERFORM ANY REPAIR WORK WITHOUT THE APPROVAL OF THE ENGINEER.
12. BEAMS TO BE REPAIRED SHALL BE JACKED FOR THE DURATION OF THE CONCRETE REPAIR. TEMPORARY SUPPORT SYSTEM SHALL BE INSTALLED PRIOR TO REMOVAL OF CONCRETE FOR REPAIR. SEE S-20 FOR DETAILS.

CONCRETE BEARING PAD REPAIR DETAIL

(PIER 3 GIRDER 5 SHOWN)

REV.	DATE	REVISION DESCRIPTION	SHEET NO.

THE INFORMATION, INCLUDING ESTIMATED QUANTITIES OF WORK, SHOWN ON THESE SHEETS IS BASED ON LIMITED INVESTIGATIONS BY THE STATE AND IS IN NO WAY WARRANTED TO INDICATE THE CONDITIONS OF ACTUAL QUANTITIES OF WORK WHICH WILL BE REQUIRED.

Plotted Date: 8/8/2017

DESIGNER/DRAFTER: D.C./S.C.
CHECKED BY: J.H.M. II
SCALE: 1½" = 1'-0"

STATE OF CONNECTICUT
DEPARTMENT OF TRANSPORTATION

Filename: ...\SB_MSH_2_174_402_BR_01154_S_40_PAD_REPAIR.dgn

SIGNATURE/BLOCK:
Close, Jensen and Miller, P.C.
1137 Silas Deane Highway
Wethersfield, CT 06109

PROJECT TITLE:
BEAM END REPAIR AND BEARING REPLACEMENT IN DISTRICT 4

TOWN: **SOUTHBURY**

DRAWING TITLE: **BEARING PAD REPAIRS BRIDGE NO. 01154**

PROJECT NO. 174-402
DRAWING NO. S-40
SHEET NO. 03.40

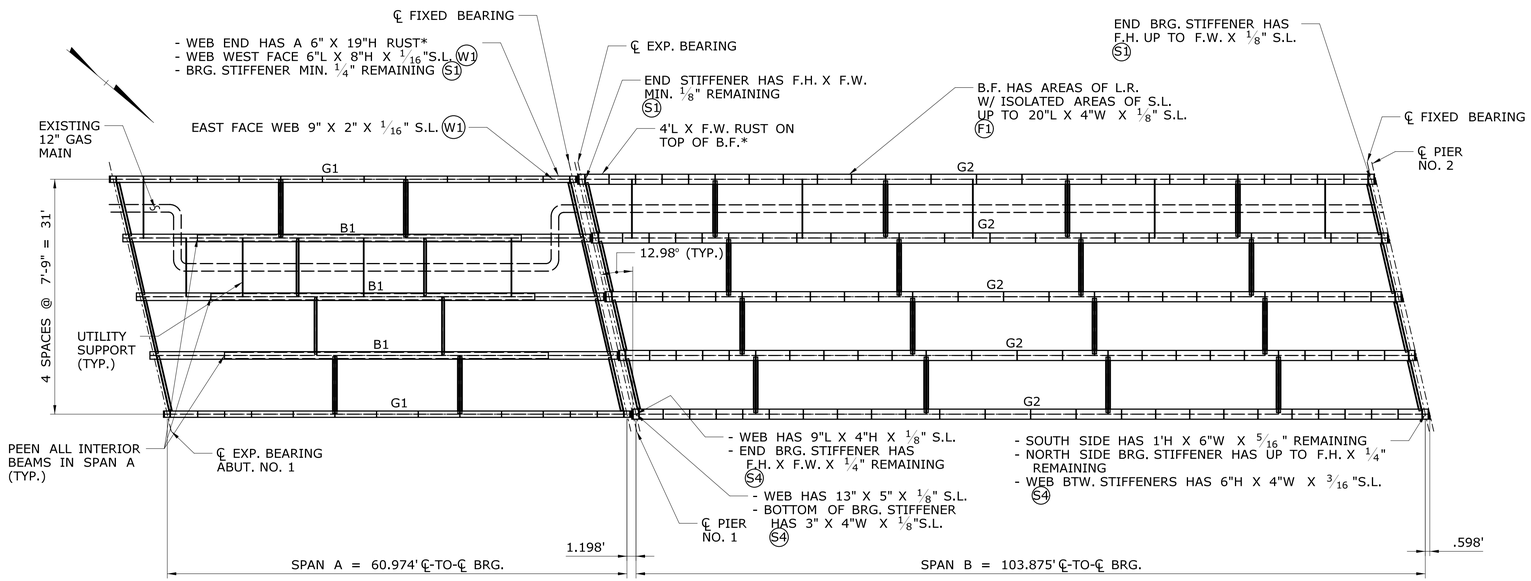

PARTIAL FRAMING PLAN

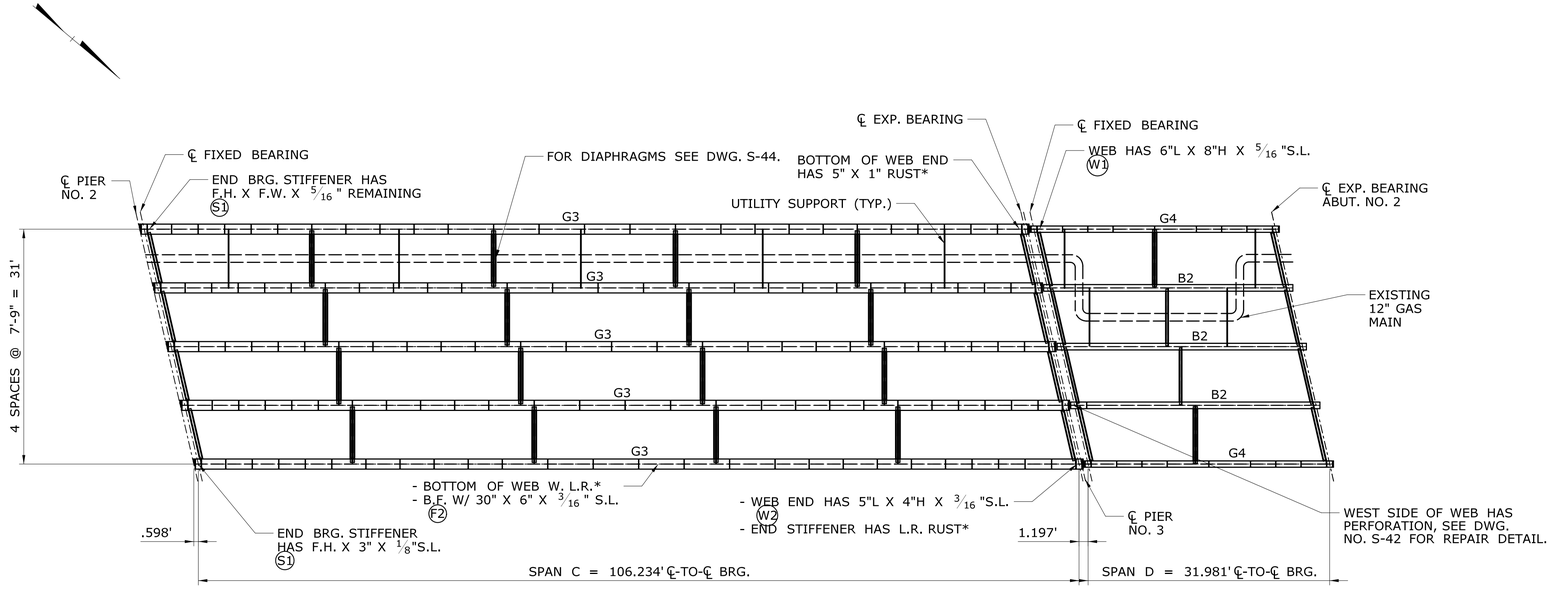

PARTIAL FRAMING PLAN

STRUCTURAL STEEL NOTES:

1. STRUCTURAL STEEL (LOW ALLOY) FOR ALL SUPERSTRUCTURE STEEL REPAIRS SHALL CONFORM TO AASHTO M270, GRADE 50 AND SHALL BE PAID UNDER ITEM "STRUCTURAL STEEL REPAIRS (SITE NO. 2)", SEE SPECIAL PROVISIONS. STRUCTURAL STEEL SHALL BE FREE OF BURRS, NICKS OR GAUGES. THE ESTIMATED WEIGHT OF STRUCTURAL STEEL IS 14 CWT AND IS PROVIDED FOR INFORMATION ONLY.
2. REMOVAL OF DETERIORATED PORTIONS OF EXISTING STRUCTURAL STEEL, REGARDLESS OF REMOVAL METHODS, SHALL NOT BE MEASURED FOR PAYMENT. THE COST OF WHICH SHALL BE INCLUDED IN THE ITEM "STRUCTURAL STEEL REPAIRS (SITE NO. 2)".
3. MULTIPLE PASS WELDS, INSPECTED BY THE MAGNETIC PARTICLE METHOD SHALL HAVE EACH PASS OR LAYER INSPECTED AND ACCEPTED BEFORE PROCEEDING TO THE NEXT PASS OR LAYER, AS DETERMINED BY THE ENGINEER.
4. WELDING ELECTRODES SHALL HAVE THE SAME CORROSION RESISTANCE AS THE BASE METAL.
5. ALL REPAIR FILLET WELDS SHALL BE INSPECTED BY THE MAGNETIC PARTICLE METHOD. ALL COMPLETE JOINT PENETRATION WELDS SHALL BE INSPECTED BY ULTRASONIC TESTING.

STEEL FRAMING DETERIORATION NOTES:

1. THE DETERIORATION AND REPAIR DIMENSIONS AND LOCATIONS DEPICTED ON THE FRAMING PLAN ARE BASED ON LIMITED FIELD OBSERVATIONS AND BRIDGE SAFETY IN-DEPTH INSPECTION REPORT DATED 12/07/2015. THE INFORMATION IS INTENDED TO BE USED AS A GUIDE AND DOES NOT NECESSARILY REFLECT THE CURRENT CONDITION OF THE STRUCTURE. THE EXACT LOCATION AND LIMITS OF DETERIORATED STEEL TO BE REPAIRED AND THE PROPOSED REPAIR DETAIL SHALL BE DELINEATED AND DETERMINED BY THE ENGINEER DURING CONSTRUCTION. NO MATERIAL SHALL BE ORDERED OR FABRICATED UNTIL THE ENGINEER HAS APPROVED REPAIR LOCATIONS. EXISTING STRUCTURAL STEEL A.S.T.M., A-373 GRADE 33 SHALL UTILIZE WELDED REPAIR DETAILS.
2. NO STEEL REPAIRS SHALL BE PERFORMED WITHOUT THE PRIOR APPROVAL OF THE ENGINEER.
3. REPAIR WORK SHALL BE PERFORMED IN ACCORDANCE WITH THE SUGGESTED SEQUENCE OF STEEL REPAIRS (SEE DWG. NO. S-16).

REFERENCES:

1. SEE DWG. NO. S-16 TO S-19 FOR STEEL REPAIR NOTES AND DETAILS.
2. SEE DWG. NO. S-20 FOR JACKING SUPPORT SYSTEM DETAILS AND NOTES
3. SEE DWG. NO. S-43 TO S-45 FOR FIELD PAINTING DETAILS AND NOTES.

LEGEND

(C1) TO (C6) CONNECTION PLATE REPAIR (SEE DWG. NO. S-19)
(F1) TO (F2) FLANGE REPAIR (SEE DWG. NO. S-17)
(S1) TO (S4) STIFFENER REPAIR (SEE DWG. NOS. S-17 TO S-18)
(W1) TO (W3) WEB REPAIR (SEE DWG. NOS. S-17 TO S-18)

KEY

F.H. = FULL HEIGHT
F.W. = FULL WIDTH
B.F. = BOTTOM FLANGE
L.R. = LAMINAR RUST
S.L. = SECTION LOSS
NEG. = NEGLIGIBLE

* = NO REPAIR REQUIRED OR AS DIRECTED BY THE ENGINEER

REV.	DATE	REVISION DESCRIPTION	SHEET NO.

THE INFORMATION, INCLUDING ESTIMATED QUANTITIES OF WORK, SHOWN ON THESE SHEETS IS BASED ON LIMITED INVESTIGATIONS BY THE STATE AND IS IN NO WAY WARRANTED TO INDICATE THE CONDITIONS OF ACTUAL QUANTITIES OF WORK WHICH WILL BE REQUIRED.

Plotted Date: 8/8/2017

DESIGNER/DRAFTER: D.C./S.C.
CHECKED BY: J.H.M. II
SCALE: 1" = 10'

STATE OF CONNECTICUT
DEPARTMENT OF TRANSPORTATION

Filename: ...\SB_MSH_2_174_402_BR_01154_S_41_FRAMING_PLAN.dgn

SIGNATURE/BLOCK:
Close, Jensen and Miller, P.C.
1137 Silas Deane Highway
Wethersfield, CT 06109

PROJECT TITLE:
BEAM END REPAIR AND BEARING REPLACEMENT IN DISTRICT 4

TOWN: SOUTHBURY

DRAWING TITLE:
FRAMING PLAN
BRIDGE NO. 01154

PROJECT NO. 174-402
DRAWING NO. S-41
SHEET NO. 03.41

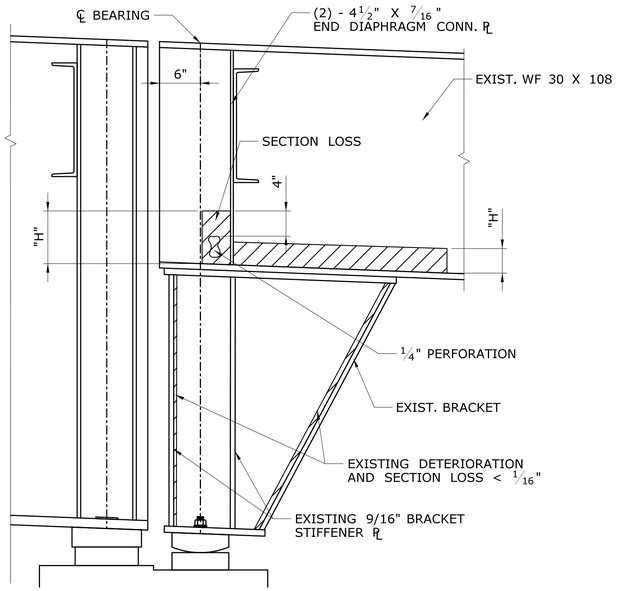

EXISTING CONDITIONS AT BEAM B2

SCALE: 1" = 1'-0"

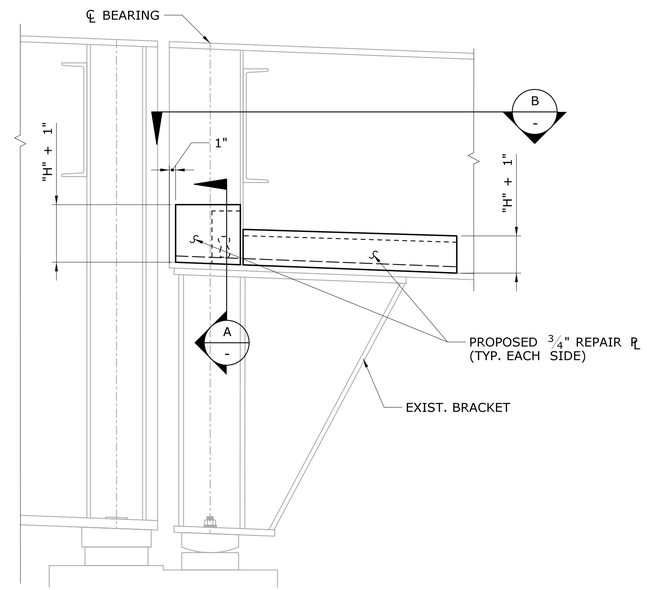

PROPOSED REPAIR AT BEAM B2

SCALE: 1" = 1'-0"

FRONT ELEVATION **SIDE ELEVATION**

PEENING TOOL

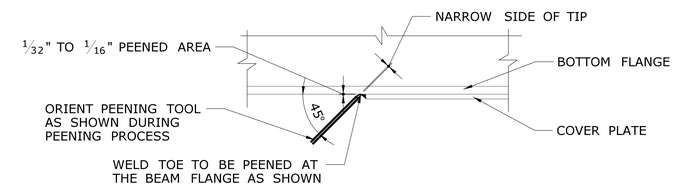

SECTION A

SCALE: 1" = 1'-0"

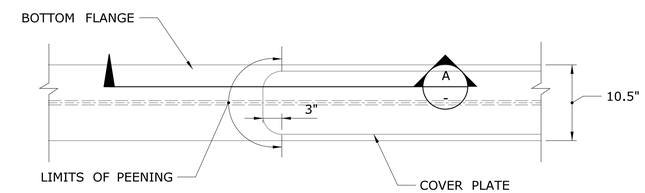

BOTTOM FLANGE COVER PLATE END WELD PEENING LIMITS

SPAN A ALL INTERIOR BEAMS (B-1)

SCALE: 1" = 1'-0"

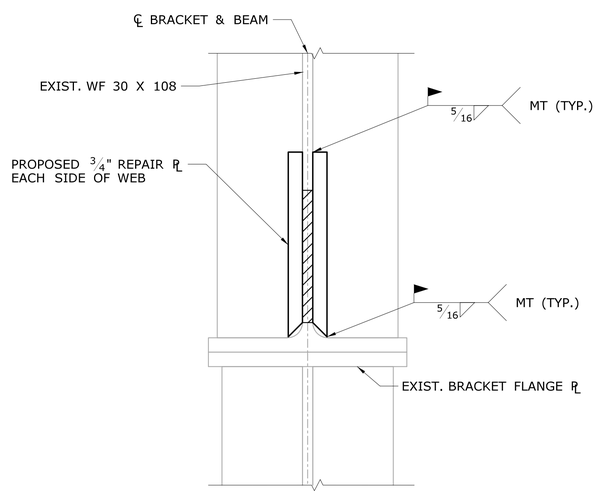

SECTION A

SCALE: 3" = 1'-0"

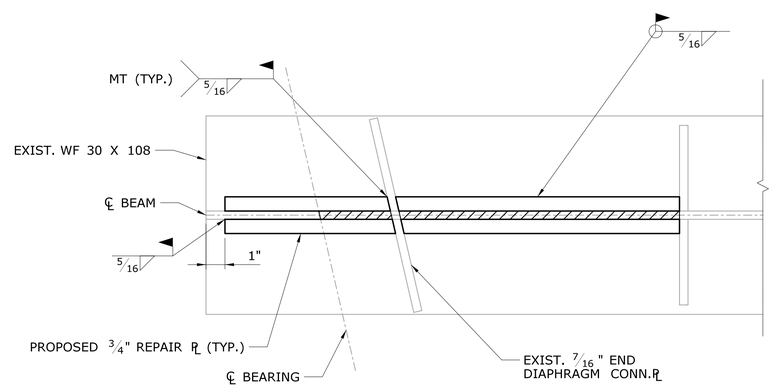

SECTION B

SCALE: 3" = 1'-0"

REFERENCES:

1. SEE DWG. NO. S-41 FOR LOCATION OF DETERIORATION.
2. SEE DWG. NO. S-41 FOR STRUCTURAL STEEL NOTES AND STEEL FRAMING DETERIORATION NOTES.
3. SEE DWG. NOS. S-43 AND S-44 FOR REMAINING MEMBER SIZES.

= DETERIORATION IN STEEL

REV.	DATE	REVISION DESCRIPTION	SHEET NO.

THE INFORMATION, INCLUDING ESTIMATED QUANTITIES OF WORK, SHOWN ON THESE SHEETS IS BASED ON LIMITED INVESTIGATIONS BY THE STATE AND IS IN NO WAY WARRANTED TO INDICATE THE CONDITIONS OF ACTUAL QUANTITIES OF WORK WHICH WILL BE REQUIRED.

Plotted Date: 8/8/2017

DESIGNER/DRAFTER: D.C./S.C.

CHECKED BY: J.H.M. II

SCALE AS NOTED

STATE OF CONNECTICUT
DEPARTMENT OF TRANSPORTATION

Filename: ...\SB_MSH_2_174_402_BR_01154_S_42_STEEL_REPAIRS-1.dgn

SIGNATURE/BLOCK:

Close, Jensen and Miller, P.C.
1137 Silas Deane Highway
Wethersfield, CT 06109

PROJECT TITLE:

BEAM END REPAIR AND BEARING REPLACEMENT IN DISTRICT 4

TOWN: **SOUTHBURY**

DRAWING TITLE: **STEEL REPAIRS BRIDGE NO.01154**

PROJECT NO. 174-402

DRAWING NO. S-42

SHEET NO. 03.42

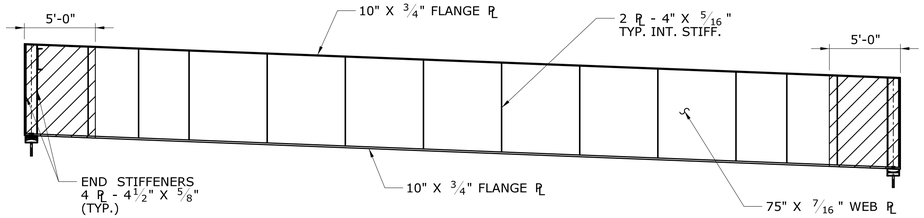

GIRDER - 1 (G1)

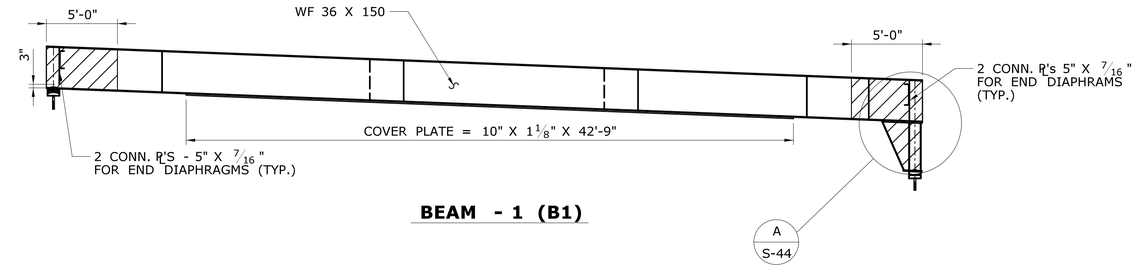

BEAM - 1 (B1)

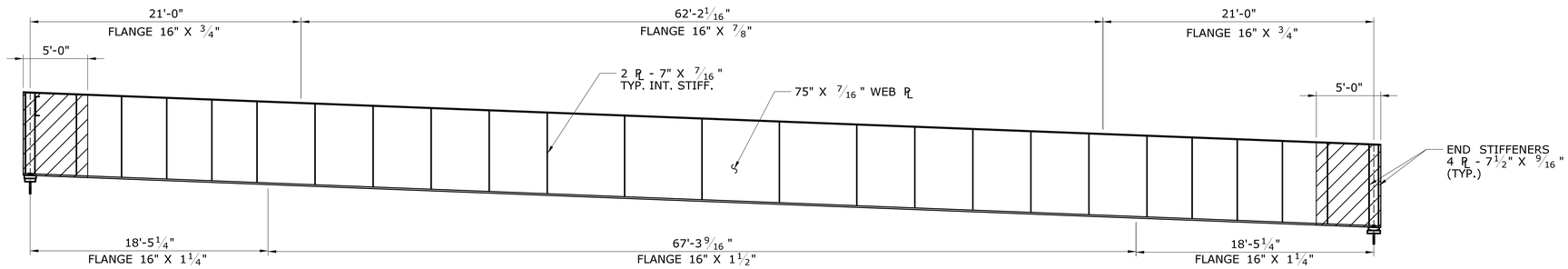

GIRDER - 2 (G2)

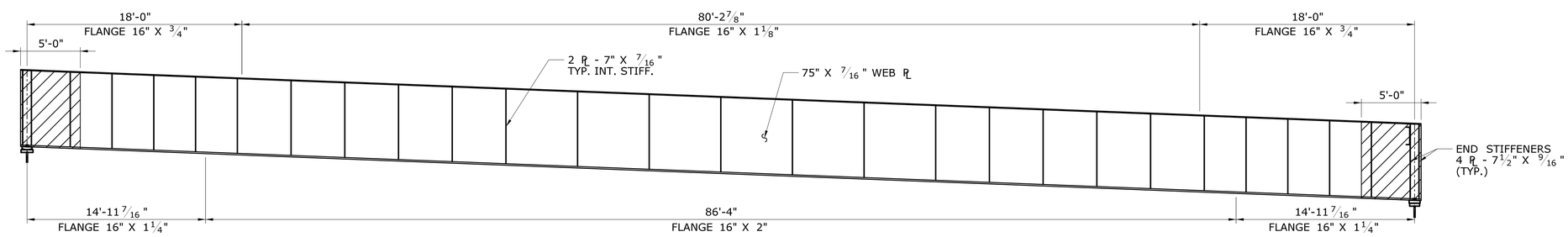

GIRDER - 3 (G3)

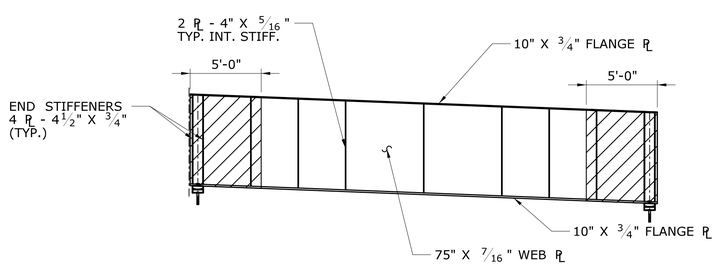

GIRDER - 4 (G4)

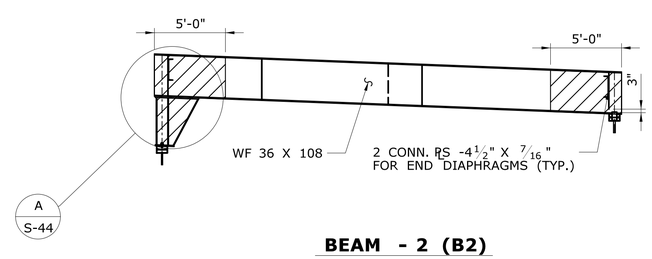

BEAM - 2 (B2)

REFERENCES:

1. SEE DWG. NO. S-41 FOR BEAM LOCATION.
2. SEE DWG. NO. S-44 FOR DIAPHRAGM AND STIFFENER DIMENSIONS AND PAINTING LIMITS.
3. SEE DWG. NO. S-45 FOR BEARING DIMENSIONS AND PAINTING LIMITS.

PAINTING NOTES:

PAINTING NOTES SEE SHEET S-44.

HATCHED PATTERN DENOTES PAINTING LIMITS FOR BEAM ENDS, DIAPHRAGMS, STIFFENERS, AND FIXED BEARINGS TO BE PAID FOR UNDER THE ITEM "ABRASIVE BLAST CLEANING AND FIELD PAINTING OF BEAM ENDS (SITE NO. 2)."

REV.	DATE	REVISION DESCRIPTION	SHEET NO.

THE INFORMATION, INCLUDING ESTIMATED QUANTITIES OF WORK, SHOWN ON THESE SHEETS IS BASED ON LIMITED INVESTIGATIONS BY THE STATE AND IS IN NO WAY WARRANTED TO INDICATE THE CONDITIONS OF ACTUAL QUANTITIES OF WORK WHICH WILL BE REQUIRED.

Plotted Date: 8/8/2017

DESIGNER/DRAFTER: D.C./S.C.
CHECKED BY: J.H.M. II
SCALE: 3/16" = 1'-0"

STATE OF CONNECTICUT
DEPARTMENT OF TRANSPORTATION

Filename: ...\SB_MSH_2_174_402_BR_01154_S_43_BEAM_PAINT-1.dgn

SIGNATURE/BLOCK:
Close, Jensen and Miller, P.C.
1137 Silas Deane Highway
Wethersfield, CT 06109

PROJECT TITLE:
BEAM END REPAIR AND BEARING REPLACEMENT IN DISTRICT 4

TOWN: **SOUTHBURY**

DRAWING TITLE: **PAINTING DETAILS - 1 BRIDGE NO. 01154**

PROJECT NO. **174-402**
DRAWING NO. **S-43**
SHEET NO. **03.43**

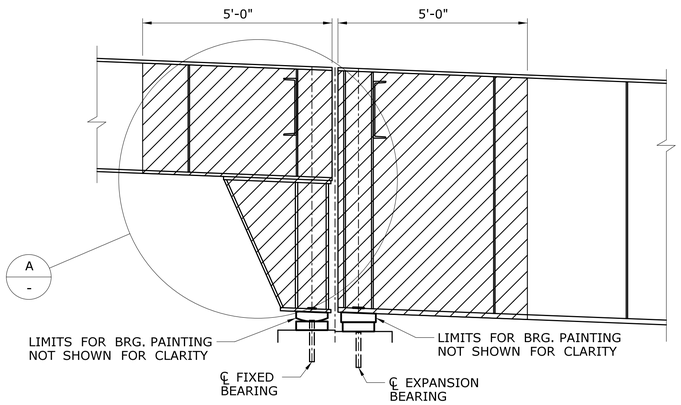

TYPICAL BEAM END ELEVATION

(PIER 1 SHOWN)
INTERIOR GIDERS PIERS 1 AND 3
SCALE: ½" = 1'-0"

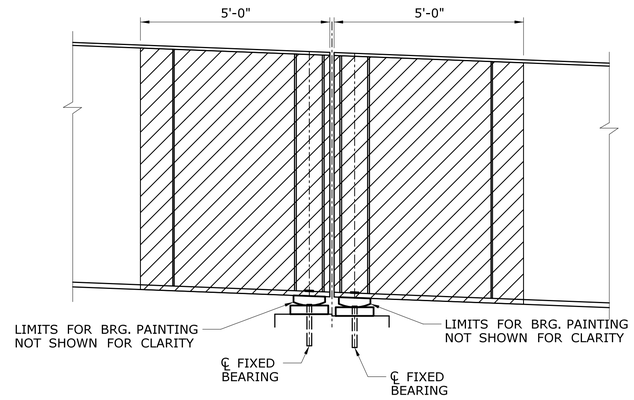

TYPICAL BEAM END ELEVATION

(PIER 2 SHOWN)
ALL GIRDERS AT PIER 2 AND FASCIA GIRDERS AT PIERS 1 AND 3
SCALE: ½" = 1'-0"

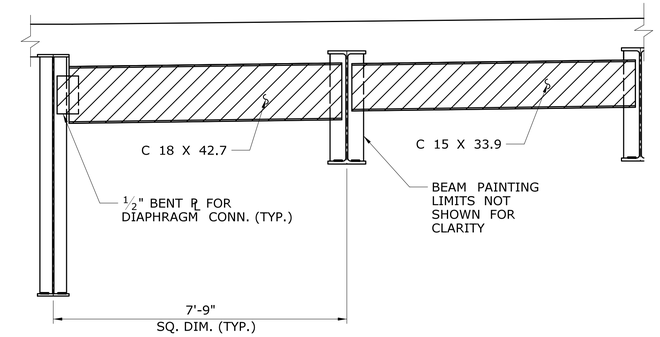

TYPICAL END DIAPHRAGM FOR SPANS A AND D

SCALE: ½" = 1'-0"

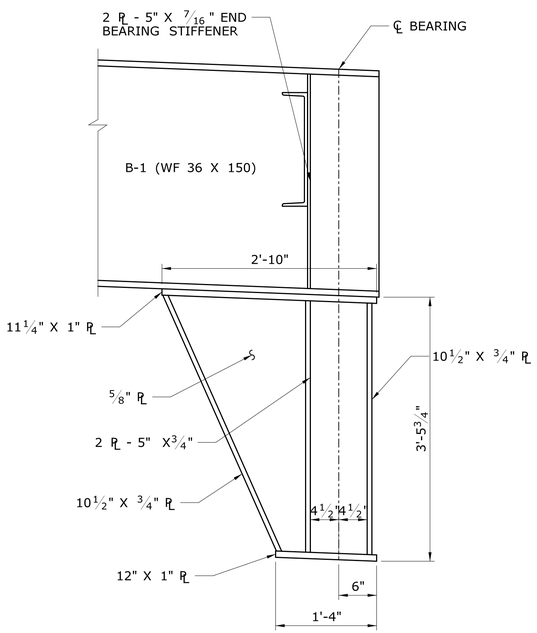

BEAM 1 (A / -)

SCALE: 1" = 1'-0"

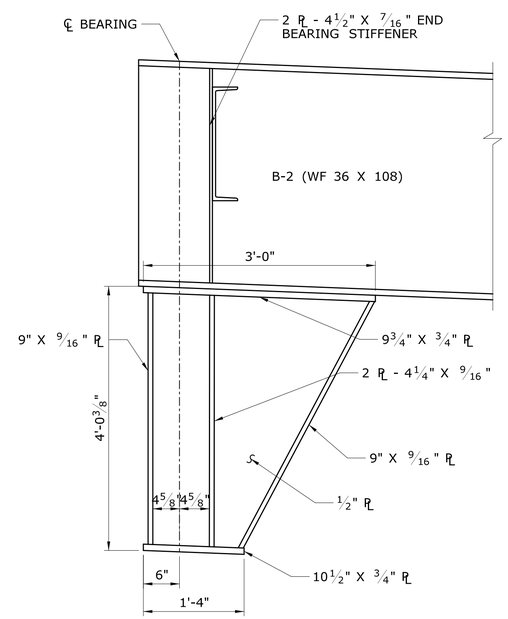

BEAM 2 (A / -)

SCALE: 1" = 1'-0"

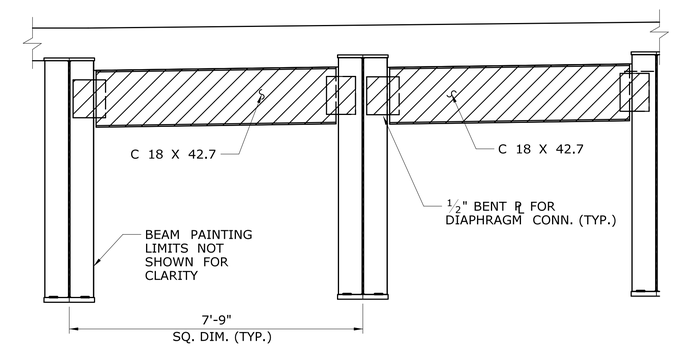

TYPICAL END DIAPHRAGM FOR SPANS B AND C

SCALE: ½" = 1'-0"

REFERENCES:

1. SEE DWG. NO. S-43 FOR MEMBER SIZES AND PAINTING LIMITS.
2. SEE DWG. NO. S-45 FOR BEARING DIMENSIONS AND PAINTING LIMITS.

PAINTING NOTES:

PAINTING NOTES SEE SHEET S-45.

HATCHED PATTERN DENOTES PAINTING LIMITS FOR BEAM ENDS, DIAPHRAGMS, STIFFENERS, AND FIXED BEARINGS TO BE PAID FOR UNDER THE ITEM "ABRASIVE BLAST CLEANING AND FIELD PAINTING OF BEAM ENDS (SITE NO. 2)."

REV.	DATE	REVISION DESCRIPTION	SHEET NO.

THE INFORMATION, INCLUDING ESTIMATED QUANTITIES OF WORK, SHOWN ON THESE SHEETS IS BASED ON LIMITED INVESTIGATIONS BY THE STATE AND IS IN NO WAY WARRANTED TO INDICATE THE CONDITIONS OF ACTUAL QUANTITIES OF WORK WHICH WILL BE REQUIRED.

Plotted Date: 8/8/2017

DESIGNER/DRAFTER: D.C./S.C.
CHECKED BY: J.H.M. II
SCALE AS NOTED

STATE OF CONNECTICUT
DEPARTMENT OF TRANSPORTATION

Filename: ...\SB_MSH_2_174_402_BR_01154_S_44_BEAM_PAINT-2.dgn

SIGNATURE/ BLOCK:
Close, Jensen and Miller, P.C.
1137 Silas Deane Highway
Wethersfield, CT 06109

PROJECT TITLE:
BEAM END REPAIR AND BEARING REPLACEMENT IN DISTRICT 4

TOWN: SOUTHBURY

DRAWING TITLE:
PAINTING DEATILS - 2
BRIDGE NO. 01154

PROJECT NO. 174-402
DRAWING NO. S-44
SHEET NO. 03.44

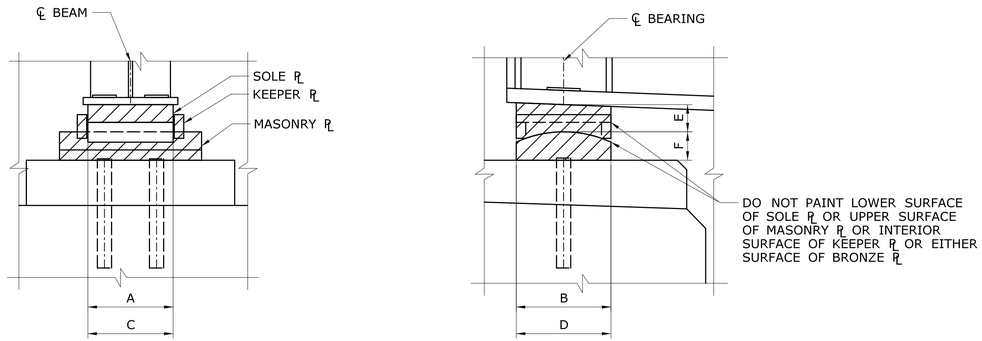

EXPANSION BEARING AT ABUTMENT NO. 1

B1 AND G1

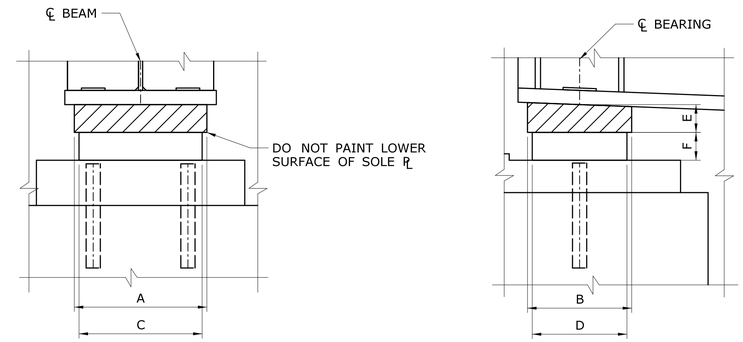

EXPANSION BEARINGS AT PIERS

G2 AND G3

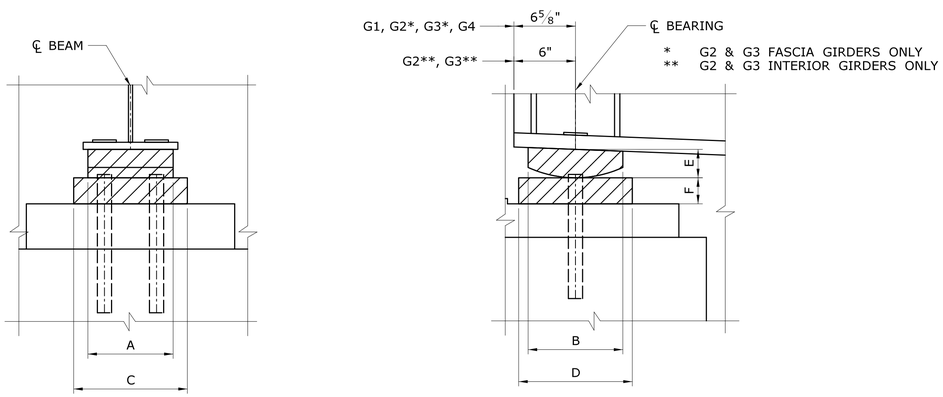

FIXED BEARINGS AT PIERS

G1 TO G4

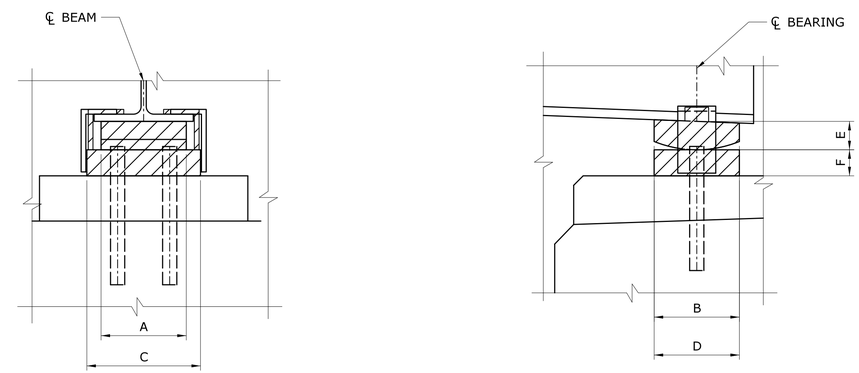

EXPANSION BEARING AT ABUTMENT NO. 2

B2 AND G4

REFERENCES:

1. SEE DWG. NO. S-43 AND S-44 FOR MEMBER SIZES AND PAINTING LIMITS.
2. SEE DWG. NO. S-44 FOR DIAPHRAGM AND STIFFENER DIMENSIONS AND PAINTING LIMITS.

HATCHED PATTERN DENOTES PAINTING LIMITS FOR FIXED BEARINGS TO BE PAID FOR UNDER THE ITEM "ABRASIVE BLAST CLEANING AND FIELD PAINTING OF BEAM ENDS (SITE NO. 2)."

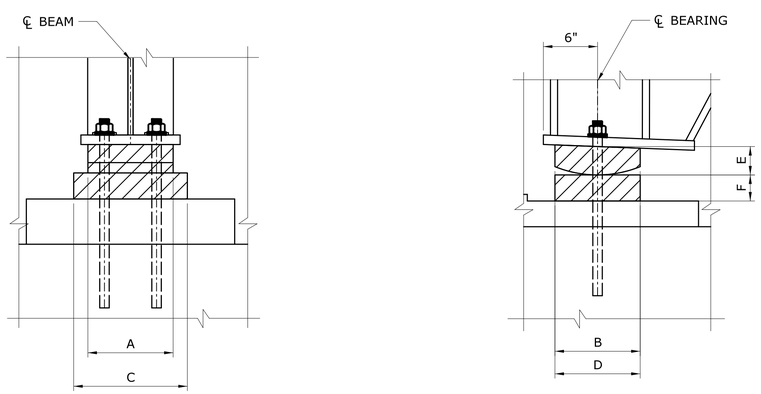

FIXED BEARINGS AT PIERS 1 AND 3

B1 AND B2

FIXED AND EXPANSION BEARING DATA

GIRDER/ BEAM	SIZE A X B	SIZE C X D	HEIGHT E	HEIGHT F
B1	10" X 10"	15" X 10"	2 1/4"	2"
B2	9" X 9"	12" X 9"	1 3/4"	1 1/2"
G1	10" X 9"	15" X 10"	2 1/4"	2"
G2	14" X 10"	18" X 12"	3"	2 3/4"
G3	14" X 10"	19" X 12"	3"	2 3/4"
G4	9" X 9"	12" X 9"	1 3/4"	1 1/2"

PAINTING NOTES:

1. THE LIMITS OF BEAM END PAINTING ARE THE HATCHED AREAS SHOWN ON THIS SHEET. ALL EXPOSED SURFACES OF STEEL MEMBERS SUCH AS END DIAPHRAGMS, STIFFENERS/CONNECTION PLATES, SOLE AND LOAD PLATES OF EXISTING BEARINGS THAT ARE WITHIN THE LIMITS SHALL BE PAINTED. PAINTING THE HATCHED AREAS SHALL BE PAID FOR UNDER THE ITEM "ABRASIVE BLAST CLEANING AND FIELD PAINTING OF BEAM ENDS (SITE NO. 2)."
2. CLEANING AND PAINTING OF AREAS IDENTIFIED BY THE ENGINEER OR DEPICTED IN THE PLANS, OTHER THAN THE ENDS OF THE EXISTING BEAMS AND END DIAPHRAGMS, SHALL BE PAID FOR UNDER THE ITEM "LOCALIZED PAINT REMOVAL AND FIELD PAINTING OF EXISTING STEEL", SEE SPECIAL PROVISIONS. DISPOSAL OF LEAD DEBRIS SHALL BE PAID FOR UNDER THE ITEM "DISPOSAL OF LEAD DEBRIS FROM ABRASIVE BLAST CLEANING", SEE SPECIAL PROVISIONS.
3. THE COLOR OF THE TOP COAT ON THE STRUCTURAL STEEL SHALL BE FEDERAL STANDARD 595, DEPARTMENT STANDARD COLOR NO. 503 (GREEN), EXACT COLOR TO BE DETERMINED BY THE ENGINEER. PROPOSED PAINT TO MATCH EXISTING AS CLOSE AS POSSIBLE.
4. THE CONTRACTOR SHALL COORDINATE ALL WORK WITH THE VARIOUS UTILITIES TO PROTECT AND MAINTAIN THE EXISTING UTILITY SERVICES DURING PAINTING.
5. THE CONTAINMENT SYSTEM SHALL BE DESIGNED BY THE CONTRACTOR AND REVIEWED BY THE ENGINEER IN ACCORDANCE WITH THE SPECIAL PROVISION "CLASS 1 CONTAINMENT AND COLLECTION OF SURFACE PREPARATION DEBRIS (SITE NO. 2)." CLASS 1 CONTAINMENT SHALL BE PROVIDED TO CONTAIN DEBRIS RESULTING FROM THE REMOVAL OF LOCATIONS IN THE PREPARATION OF STEEL SURFACES FOR PAINTING.
6. IF THE CONTRACTOR CHOOSES TO ABRASIVE BLAST CLEAN THE BEAM ENDS PRIOR TO STRUCTURAL STEEL REPAIRS, THEY SHOULD ONLY BE PRIMER PAINTED. THIS WILL ALLOW FOR STRUCTURAL REPAIR TO BE COVERED IN ONE APPLICATION OF TOP COAT ALONG WITH BEAM ENDS.

REV.	DATE	REVISION DESCRIPTION	SHEET NO.

THE INFORMATION, INCLUDING ESTIMATED QUANTITIES OF WORK, SHOWN ON THESE SHEETS IS BASED ON LIMITED INVESTIGATIONS BY THE STATE AND IS IN NO WAY WARRANTED TO INDICATE THE CONDITIONS OF ACTUAL QUANTITIES OF WORK WHICH WILL BE REQUIRED.

Plotted Date: 8/8/2017

DESIGNER/DRAFTER: D.C./S.C.
CHECKED BY: J.H.M. II
SCALE: 1 1/2" = 1'-0"

STATE OF CONNECTICUT
DEPARTMENT OF TRANSPORTATION

Filename: ...\SB_MSH_2_174_402_BR_01154_S_45_BEAM_PAINT-3.dgn

SIGNATURE/ BLOCK:
Close, Jensen and Miller, P.C.
1137 Silas Deane Highway
Wethersfield, CT 06109

PROJECT TITLE:
BEAM END REPAIR AND BEARING REPLACEMENT IN DISTRICT 4

TOWN: SOUTHBURY

DRAWING TITLE: PAINTING DETAILS - 3 BRIDGE NO. 01154

PROJECT NO. 174-402
DRAWING NO. S-45
SHEET NO. 03.45

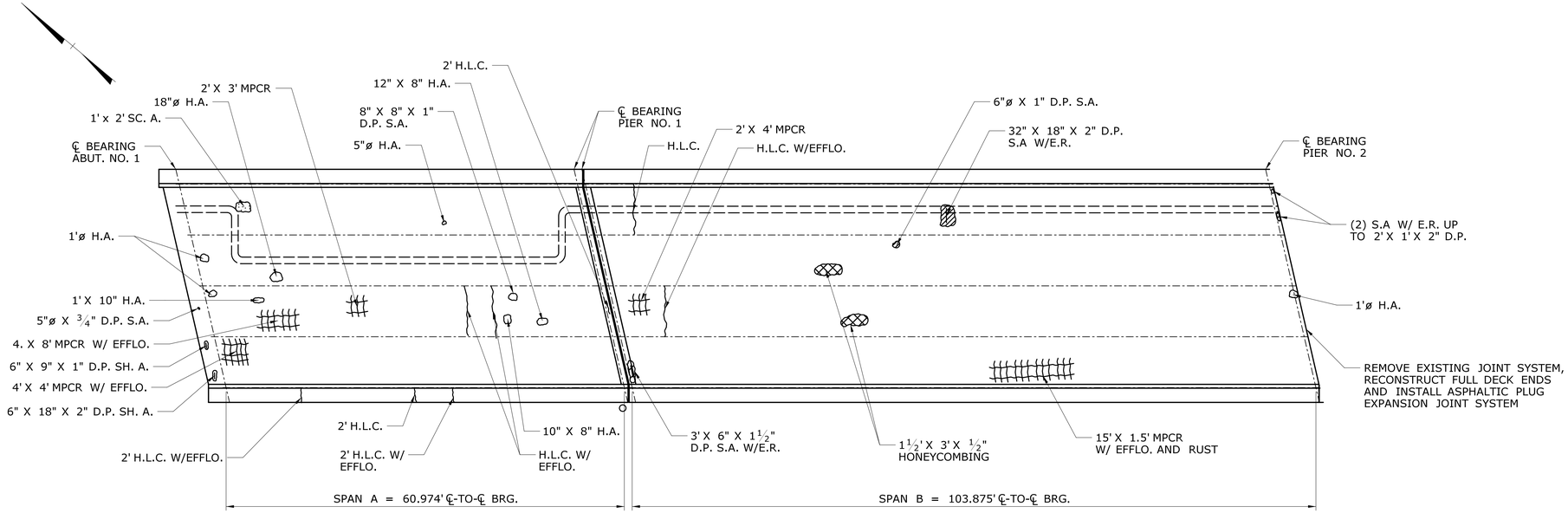

PARTIAL DECK PLAN

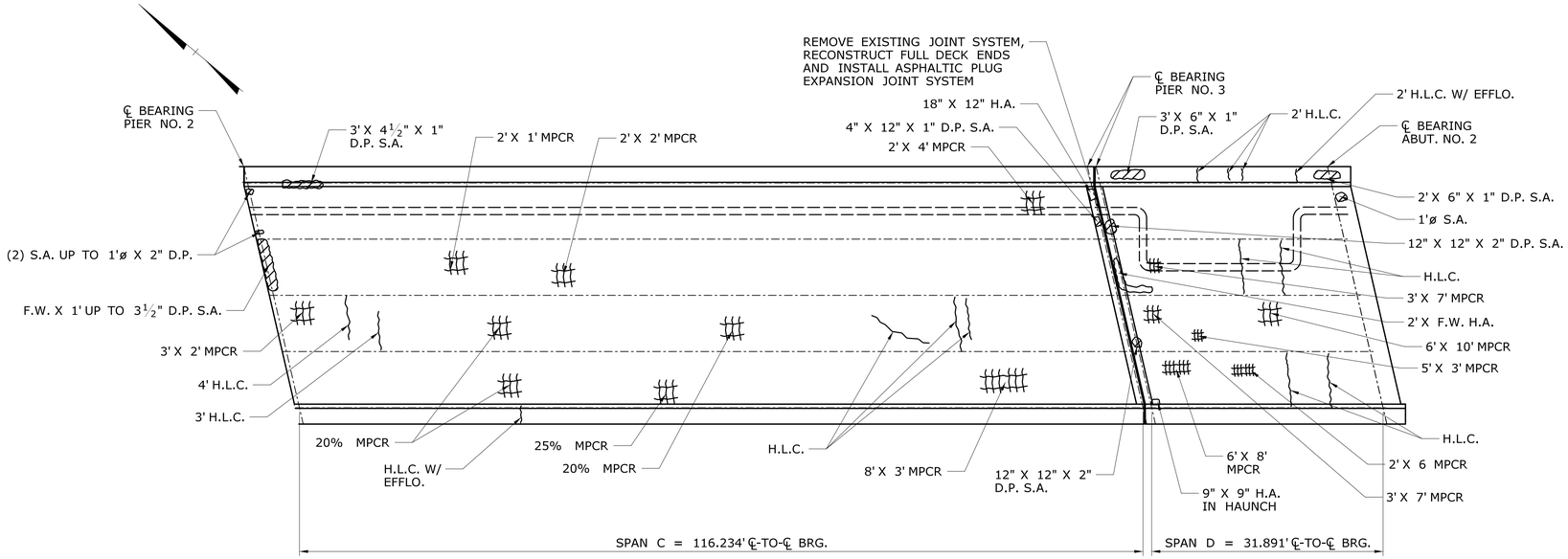

PARTIAL DECK PLAN

LEGEND

- CRACK (HAIRLINE UNLESS DIMENSIONED OTHERWISE) (H.L.C.)
- SPALL AREA WITH EXPOSED REINFORCING (S.A. W/E.R.)
- SPALL AREA (S.A.) (D.P. = DEEP)
- HOLLOW AREA (H.A.)
- SHALLOW REBAR (SH. A.)
- HONEYCOMB AREA (H.C.A.)
- SCALE AREA (SC. A.)
- MAP CRACKS (MPCR)
- E EFFLORESCENCE (EFFLO.)

APPROXIMATE LOCATIONS PER
12/07/2015 BRIDGE INSPECTION REPORT

NOTES:

1. THE DECK DETERIORATION SHOWN ARE BASED ON LIMITED FIELD OBSERVATIONS AND BRIDGE SAFETY INSPECTION REPORT (12/07/2015). THE INFORMATION IS INTENDED TO BE USED AS A GUIDE AND DOES NOT NECESSARILY REFLECT THE CURRENT CONDITION OF THE STRUCTURE. THE EXACT LOCATION AND LIMITS OF DETERIORATED CONCRETE TO BE REPAIRED SHALL BE DETERMINED BY THE ENGINEER DURING CONSTRUCTION.
2. THE CONTRACTOR SHALL PROVIDE SAFE ACCESS FOR THE ENGINEER TO DELINEATE AND REVIEW THE REPAIR WORK. THE COST OF PROVIDING ACCESS SHALL BE INCLUDED IN THE COST OF APPROPRIATE REPAIR ITEMS.
3. DECK UNDERSIDE REPAIRS SHALL BE REPAIRED IN ACCORDANCE WITH "CLEAN AND COAT EXPOSED REINFORCING STEEL" DETAILS.
4. FOR "CLEAN AND COAT EXPOSED REINFORCING STEEL" REPAIR DETAILS, SEE DWG. NO. S-07.
5. FOR "FULL DEPTH PATCH" AND "PARTIAL DEPTH PATCH" DETAILS, SEE DWG. NOS. S-07 AND S-08.

REFERENCES:

1. SEE DWG. NOS. S-07 AND S-08 FOR DECK REPAIR DETAILS.
2. SEE DWG. NO. S-49 FOR CONCRETE DECK END RECONSTRUCTION.

KEY

F.H. = FULL HEIGHT
F.W. = FULL WIDTH
D.P. = DEEP
W/ = WITH

REV.	DATE	REVISION DESCRIPTION	SHEET NO.

THE INFORMATION, INCLUDING ESTIMATED QUANTITIES OF WORK, SHOWN ON THESE SHEETS IS BASED ON LIMITED INVESTIGATIONS BY THE STATE AND IS IN NO WAY WARRANTED TO INDICATE THE CONDITIONS OF ACTUAL QUANTITIES OF WORK WHICH WILL BE REQUIRED.

Plotted Date: 8/8/2017

DESIGNER/DRAFTER: D.C./S.C.
CHECKED BY: J.H.M. II
SCALE: 1" = 10'

STATE OF CONNECTICUT
DEPARTMENT OF TRANSPORTATION

Filename: ...\SB_MSH_2_174_402_BR_01154_S_46_DECK_PLAN.dgn

SIGNATURE/ BLOCK:
Close, Jensen and Miller, P.C.
1137 Silas Deane Highway
Wethersfield, CT 06109

PROJECT TITLE:
BEAM END REPAIR AND BEARING REPLACEMENT IN DISTRICT 4

TOWN: SOUTHBURY

DRAWING TITLE:
DECK PLAN
BRIDGE NO. 01154

PROJECT NO. 174-402
DRAWING NO. S-46
SHEET NO. 03.46

THIS SHEET IS FOR INFORMATION ONLY AND IS TO BE COMPLETED BY THE ENGINEER ON A FULL SIZE PAPER COPY OF THIS SHEET. THE COMPLETED DRAWING SHALL BE FORWARDED TO THE MANAGER OF BRIDGE SAFETY AND EVALUATION.

INSPECTOR NOTES

INSPECTOR NOTES

PERCENTAGE AND QUANTITIES

DATES:	START OF REPAIRS		
	COMPLETION OF REPAIRS		
PARTIAL DEPTH PATCH		%	QTY.
HYDRO-DEMOLITION			
PNEUMATIC HAMMER			
TOTALS			
PARTIAL DEPTH PATCH		%	QTY.
HYDRO-DEMOLITION			
PNEUMATIC HAMMER			
TOTALS			

DECK PATCHING LEGEND:

- EXISTING PATCHED AREA (FULL-DEPTH AND PARTIAL DEPTH) APPROXIMATE % OF TOTAL DECK AREA =
- DENOTES THE LIMITS OF REMOVAL BY HYDRO-DEMOLITION, REPLACE WITH PARTIAL DEPTH PATCH.
- DENOTES THE LIMITS OF REMOVAL BY PNEUMATIC HAMMER, REPLACE WITH PARTIAL-DEPTH PATCH.
- DENOTES THE LIMITS OF REMOVAL OF HYDRO-DEMOLITION, REPLACE WITH FULL DEPTH PATCH.
- DENOTES THE LIMITS OF REMOVAL BY PNEUMATIC HAMMER, REPLACE WITH FULL DEPTH PATCH.

THE ENGINEER WILL INDICATE THE FOLLOWING:

1. THE BEGINNING AND COMPLETION DATES OF REPAIRS.
2. THE LIMITS OF EXISTING AND FINISHED PATCHED DECK AREAS ON THE PLAN.
3. THE APPROXIMATE PERCENTAGE OF TOTAL DECK AREA REPAIRED WITH PARTIAL AND FULL DEPTH PATCHES.
4. THE FINAL QUANTITIES OF PARTIAL AND FULL DEPTH PATCHING MATERIALS USED IN THE DECK REPAIRS.
5. THE METHOD AND LIMIT OF REMOVAL OF THE DETERIORATED CONCRETE. FOR EXAMPLE, PNEUMATIC HAMMER OR HYDRO-DEMOLITION, AS INDICATED ON THE DECK PLAN.

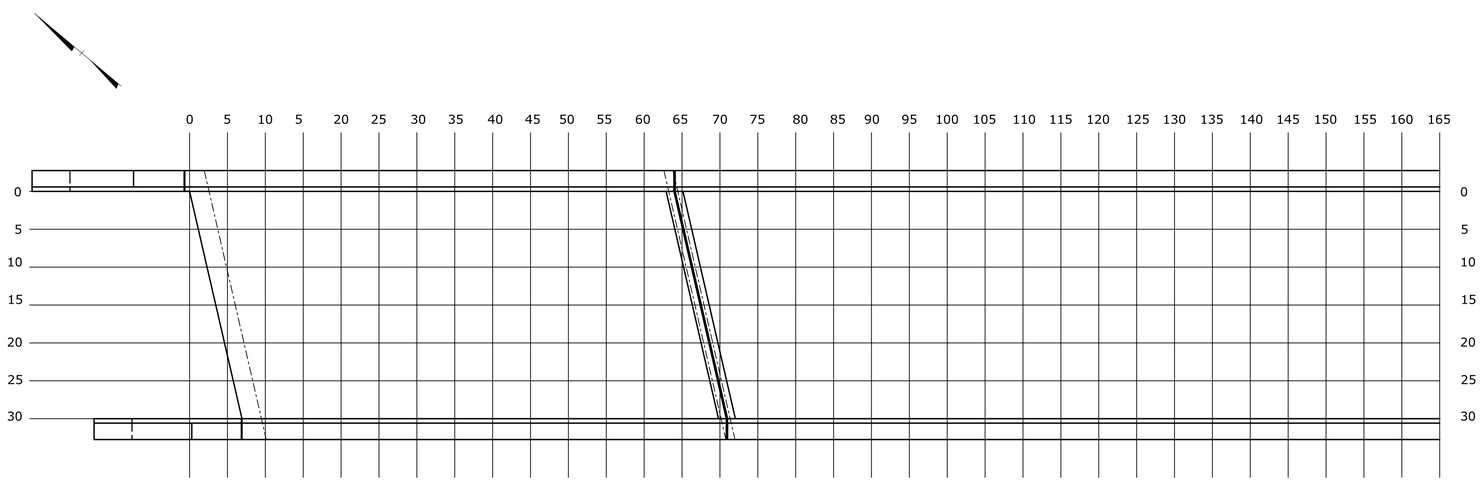

SPAN A **SPAN B**

PARTIAL PLAN

REV.	DATE	REVISION DESCRIPTION	SHEET NO.

THE INFORMATION, INCLUDING ESTIMATED QUANTITIES OF WORK, SHOWN ON THESE SHEETS IS BASED ON LIMITED INVESTIGATIONS BY THE STATE AND IS IN NO WAY WARRANTED TO INDICATE THE CONDITIONS OF ACTUAL QUANTITIES OF WORK WHICH WILL BE REQUIRED.

Plotted Date: 8/8/2017

DESIGNER/DRAFTER: D.C./S.C.
CHECKED BY: J.H.M. II
SCALE: 1" = 10'

STATE OF CONNECTICUT
DEPARTMENT OF TRANSPORTATION

Filename: ...\SB_MSH_2_174_402_BR_01154_S_47_DECK_PLAN_GRID-1.dgn

SIGNATURE/ BLOCK:
Close, Jensen and Miller, P.C.
1137 Silas Deane Highway
Wethersfield, CT 06109

PROJECT TITLE:
BEAM END REPAIR AND BEARING REPLACEMENT IN DISTRICT 4

TOWN: **SOUTHBURY**

DRAWING TITLE: **DECK PLAN GRID - 1 BRIDGE NO.01154**

PROJECT NO. 174-402
DRAWING NO. S-47
SHEET NO. 03.47

THIS SHEET IS FOR INFORMATION ONLY AND IS TO BE COMPLETED BY THE ENGINEER ON A FULL SIZE PAPER COPY OF THIS SHEET. THE COMPLETED DRAWING SHALL BE FORWARDED TO THE MANAGER OF BRIDGE SAFETY AND EVALUATION.

INSPECTOR NOTES

INSPECTOR NOTES

PERCENTAGE AND QUANTITIES

DATES:	START OF REPAIRS		
	COMPLETION OF REPAIRS		
PARTIAL DEPTH PATCH		%	QTY.
HYDRO-DEMOLITION			
PNEUMATIC HAMMER			
TOTALS			
PARTIAL DEPTH PATCH		%	QTY.
HYDRO-DEMOLITION			
PNEUMATIC HAMMER			
TOTALS			

DECK PATCHING LEGEND:

- EXISTING PATCHED AREA (FULL-DEPTH AND PARTIAL DEPTH) APPROXIMATE % OF TOTAL DECK AREA =
- DENOTES THE LIMITS OF REMOVAL BY HYDRO-DEMOLITION, REPLACE WITH PARTIAL DEPTH PATCH.
- DENOTES THE LIMITS OF REMOVAL BY PNEUMATIC HAMMER, REPLACE WITH PARTIAL-DEPTH PATCH.
- DENOTES THE LIMITS OF REMOVAL OF HYDRO-DEMOLITION, REPLACE WITH FULL DEPTH PATCH.
- DENOTES THE LIMITS OF REMOVAL BY PNEUMATIC HAMMER, REPLACE WITH FULL DEPTH PATCH.

THE ENGINEER WILL INDICATE THE FOLLOWING:

1. THE BEGINNING AND COMPLETION DATES OF REPAIRS.
2. THE LIMITS OF EXISTING AND FINISHED PATCHED DECK AREAS ON THE PLAN.
3. THE APPROXIMATE PERCENTAGE OF TOTAL DECK AREA REPAIRED WITH PARTIAL AND FULL DEPTH PATCHES.
4. THE FINAL QUANTITIES OF PARTIAL AND FULL DEPTH PATCHING MATERIALS USED IN THE DECK REPAIRS.
5. THE METHOD AND LIMIT OF REMOVAL OF THE DETERIORATED CONCRETE. FOR EXAMPLE, PNEUMATIC HAMMER OR HYDRO-DEMOLITION, AS INDICATED ON THE DECK PLAN.

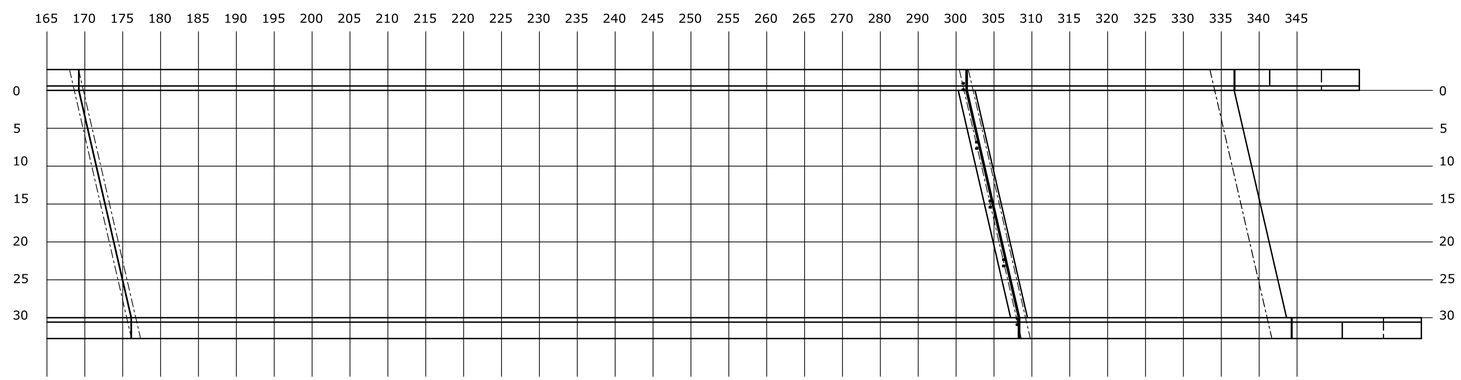

SPAN C

SPAN D

PARTIAL PLAN

REV.	DATE	REVISION DESCRIPTION	SHEET NO.

THE INFORMATION, INCLUDING ESTIMATED QUANTITIES OF WORK, SHOWN ON THESE SHEETS IS BASED ON LIMITED INVESTIGATIONS BY THE STATE AND IS IN NO WAY WARRANTED TO INDICATE THE CONDITIONS OF ACTUAL QUANTITIES OF WORK WHICH WILL BE REQUIRED.

Plotted Date: 8/8/2017

DESIGNER/DRAFTER: D.C./S.C.

CHECKED BY: J.H.M. II

SCALE: 1" = 10'

STATE OF CONNECTICUT
DEPARTMENT OF TRANSPORTATION

Filename: ...\SB_MSH_2_174_402_BR_01154_S_48_DECK_PLAN_GRID-2.dgn

SIGNATURE/BLOCK:

Close, Jensen and Miller, P.C.
1137 Silas Deane Highway
Wethersfield, CT 06109

PROJECT TITLE:

BEAM END REPAIR AND BEARING REPLACEMENT IN DISTRICT 4

TOWN: **SOUTHBURY**

DRAWING TITLE: **DECK PLAN GRID - 2 BRIDGE NO. 01154**

PROJECT NO. **174-402**

DRAWING NO. **S-48**

SHEET NO. **03.48**

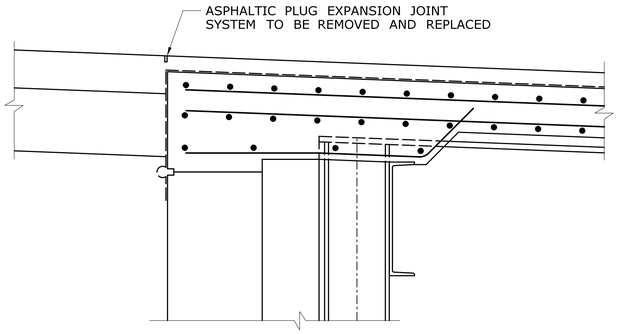

EXISTING ABUTMENT NO. 1 & 2

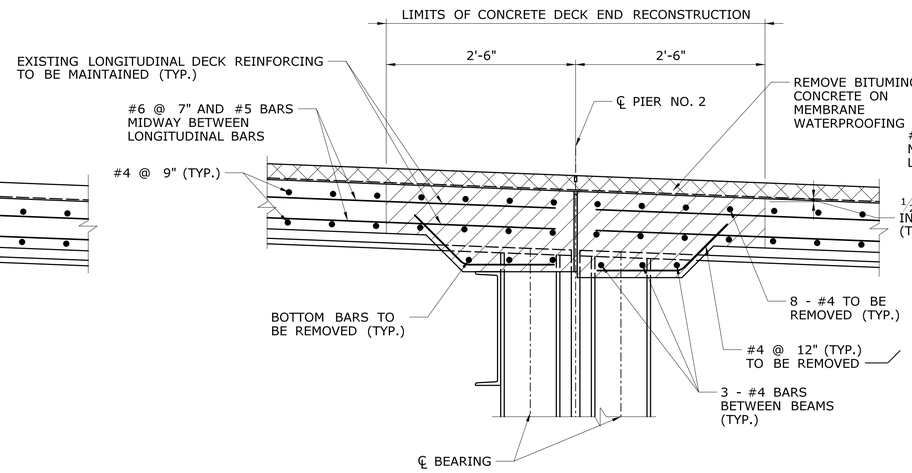

EXISTING PIER NO. 2

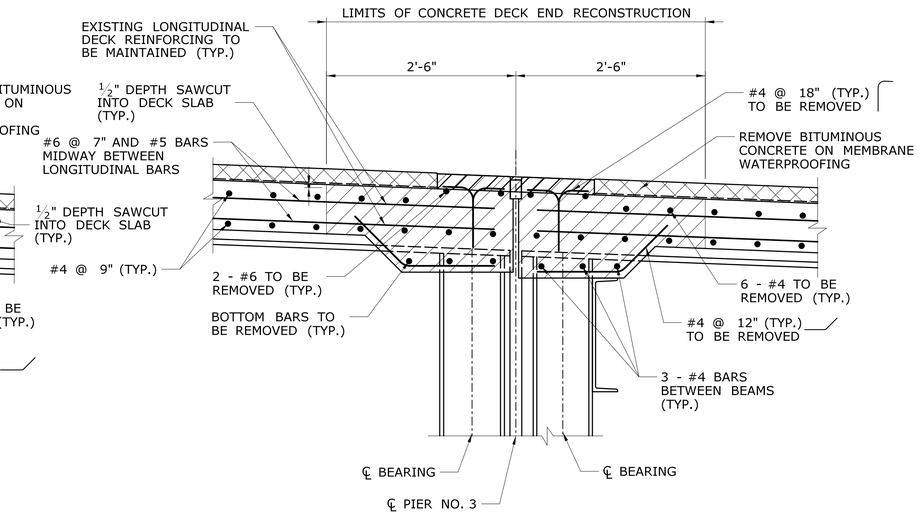

EXISTING PIER NO. 3

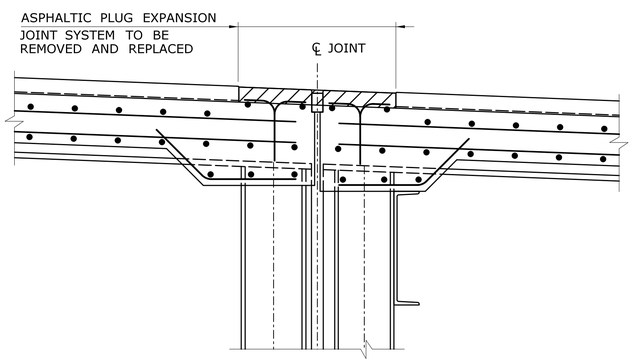

EXISTING PIER NO. 1

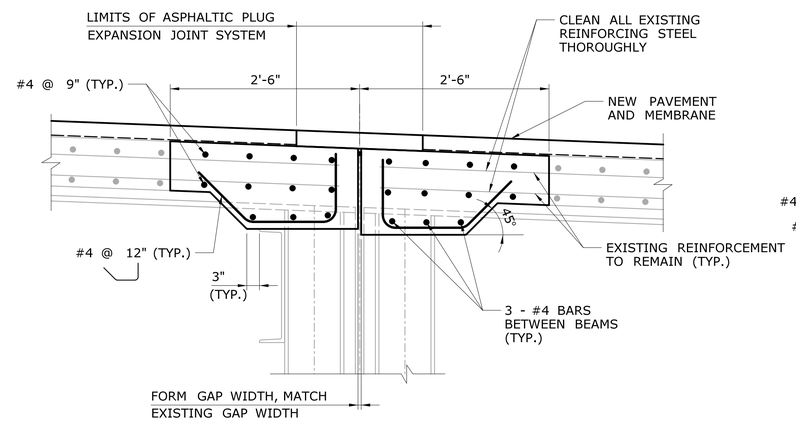

PROPOSED PIER NO. 2

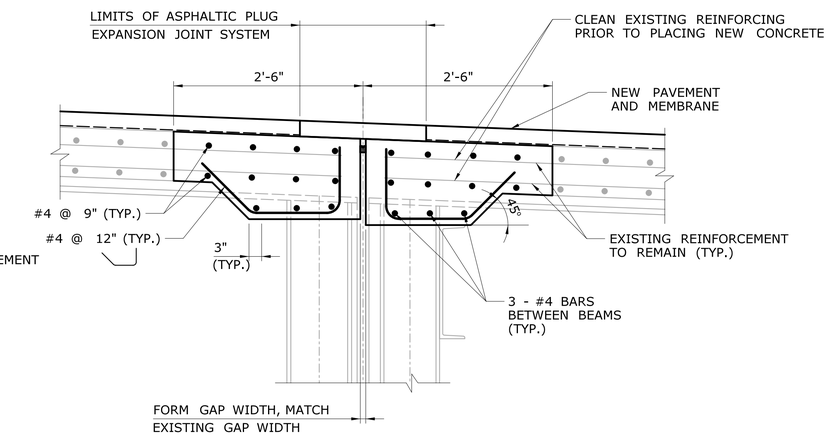

PROPOSED PIER NO. 3

CONCRETE DECK END REPAIR NOTES:

1. WHERE PROPOSED CONCRETE IS BEING PLACED AGAINST EXISTING CONCRETE, THE SURFACE OF EXISTING CONCRETE SHALL BE ROUGHENED TO ¼" AMPLITUDE AND THOROUGHLY CLEANED PRIOR TO PLACING THE NEW CONCRETE. THIS WORK SHALL BE PAID FOR UNDER THE ITEM "RECONSTRUCT CONCRETE DECK ENDS" SEE SPECIAL PROVISIONS.
2. ALL EXPOSED REINFORCEMENT INTEGRATED INTO NEW WORK SHALL BE THOROUGHLY CLEANED PRIOR TO PLACEMENT OF NEW CONCRETE.
3. ALL NEW REINFORCEMENT SHALL BE INCLUDED FOR PAYMENT UNDER THE ITEM "RECONSTRUCT CONCRETE DECK ENDS".
4. BITUMINOUS CONCRETE OVERLAY AND MEMBRANE WATERPROOFING SHALL BE REMOVED PRIOR TO DECK END RECONSTRUCTION. REMOVAL OF BITUMINOUS CONCRETE OVERLAY AND MEMBRANE WATERPROOFING SHALL BE PAID FOR UNDER THE ITEM "REMOVAL OF EXISTING WEARING SURFACE".

REFERENCES:

1. SEE DWG NO. S-09 FOR ASPHALTIC PLUG JOINT NOTES.
2. SEE DWG NOS. S-12 TO S-15 FOR ASPHALTIC PLUG JOINT DETAILS.

REV.	DATE	REVISION DESCRIPTION	SHEET NO.

THE INFORMATION, INCLUDING ESTIMATED QUANTITIES OF WORK, SHOWN ON THESE SHEETS IS BASED ON LIMITED INVESTIGATIONS BY THE STATE AND IS IN NO WAY WARRANTED TO INDICATE THE CONDITIONS OF ACTUAL QUANTITIES OF WORK WHICH WILL BE REQUIRED.

Plotted Date: 8/8/2017

DESIGNER/DRAFTER: D.C./S.C.
CHECKED BY: J.H.M. II
SCALE: 1" = 1'-0"

STATE OF CONNECTICUT
DEPARTMENT OF TRANSPORTATION

Filename: ...\SB_MSH_2_174_402_BR_01154_S_49_DECK_END.dgn

SIGNATURE/BLOCK:
Close, Jensen and Miller, P.C.
1137 Silas Deane Highway
Wethersfield, CT 06109

PROJECT TITLE:
BEAM END REPAIR AND BEARING REPLACEMENT IN DISTRICT 4

TOWN: **SOUTHBURY**

DRAWING TITLE:
DECK END REPAIRS BRIDGE NO. 01154

PROJECT NO. 174-402
DRAWING NO. S-49
SHEET NO. 03.49

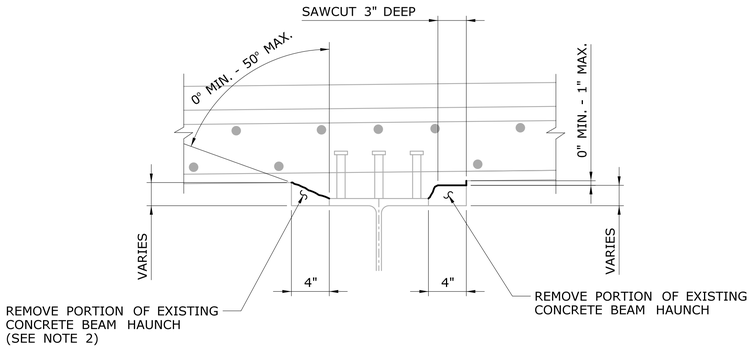

INACCESSIBLE CONDITION

SEE NOTE 2

ACCESSIBLE CONDITION

EXISTING CONDITION

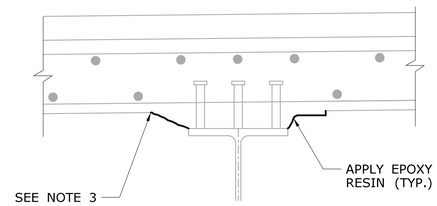

FINAL CONDITION

DETAILS FOR CONCRETE HAUNCH REMOVAL

SCALE: $1\frac{1}{2}$" = 1'-0"

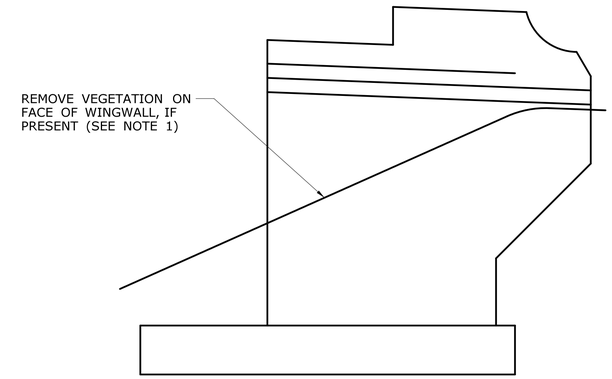

TYPICAL NORTH WINGWALLS

SCALE: $\frac{1}{4}$" = 1'-0"

HAUNCH REMOVAL NOTES:

1. THE REMOVAL OF THE CONCRETE HAUNCH SHOWN SHALL BE INCLUDED FOR PAYMENT UNDER THE ITEM "CONCRETE HAUNCH REMOVAL".
2. THIS METHOD IS TO BE USED ONLY IN THOSE AREAS HAVING INSUFFICIENT CLEARANCE FOR SAW-CUTTING EQUIPMENT, SUCH AS ABOVE SOME DIAPHRAGMS, AS ORDERED BY THE ENGINEER.
3. IF OVER-REMOVAL RESULTS, APPLY TWO COATS OF EPOXY RESIN TO THE CONCRETE SURFACE AND DECK REINFORCING STEEL EXPOSED DURING HAUNCH REMOVAL. ALL REASONABLE PRECAUTIONS SHALL BE TAKEN TO AVOID THIS CONDITION. SEE SPECIAL PROVISIONS.
4. CONCRETE HAUNCH REMOVAL WILL BE LIMITED TO HAUNCHES OVER I-84 FROM EDGE-OF-PAVEMENT TO EDGE-OF-PAVEMENT.

WINGWALL NOTES:

1. COST OF CLEANING DEBRIS IN EXISTING JOINT AND REMOVAL OF VEGETATION ON FACE OF WINGWALLS ARE INCLUDED UNDER THE HIGHWAY ITEM "CLEARING AND GRUBBING."

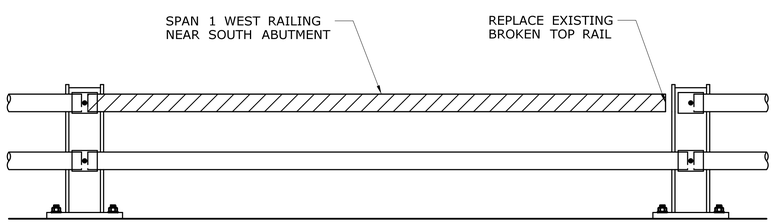

ELEVATION

EXISTING CONDITION

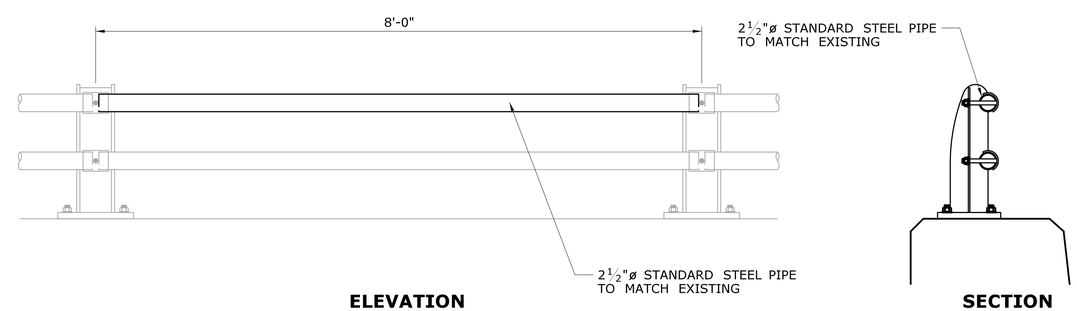

ELEVATION

SECTION

FINAL CONDITION

REFERENCES:

1. SEE DWG. NO. S-52 FOR METAL BRIDGE RAIL DETAILS.

DETAILS FOR RAILING REPAIR

SCALE: 1" = 1'-0"

REV.	DATE	REVISION DESCRIPTION	SHEET NO.

THE INFORMATION, INCLUDING ESTIMATED QUANTITIES OF WORK, SHOWN ON THESE SHEETS IS BASED ON LIMITED INVESTIGATIONS BY THE STATE AND IS IN NO WAY WARRANTED TO INDICATE THE CONDITIONS OF ACTUAL QUANTITIES OF WORK WHICH WILL BE REQUIRED.

Plotted Date: 8/8/2017

DESIGNER/DRAFTER: **D.C./S.C.**

CHECKED BY: **J.H.M. II**

SCALE AS NOTED

STATE OF CONNECTICUT
DEPARTMENT OF TRANSPORTATION

Filename: ..\SB_MSH_2_174_402_BR_01154_S_50_MISC.dgn

SIGNATURE/ BLOCK:

Close, Jensen and Miller, P.C.
1137 Silas Deane Highway
Wethersfield, CT 06109

PROJECT TITLE:

BEAM END REPAIR AND BEARING REPLACEMENT IN DISTRICT 4

TOWN: **SOUTHBURY**

DRAWING TITLE: **MISCELLANEOUS BRIDGE NO. 01154**

PROJECT NO. **174-402**

DRAWING NO. **S-50**

SHEET NO. **03.50**

PUB. ROAD DIV. NO.	STATE	TOWN	FED. AID PROJ. NO.	PROJ. NO.	YEAR	ROUTE NO.	SHEET NO.	TOTAL SHEETS
1	CONN.	SOUTHBURY	I-84-2(101)	130-95		I-84	124	379

FORM NO. ENG-13 EQ. (1-62)

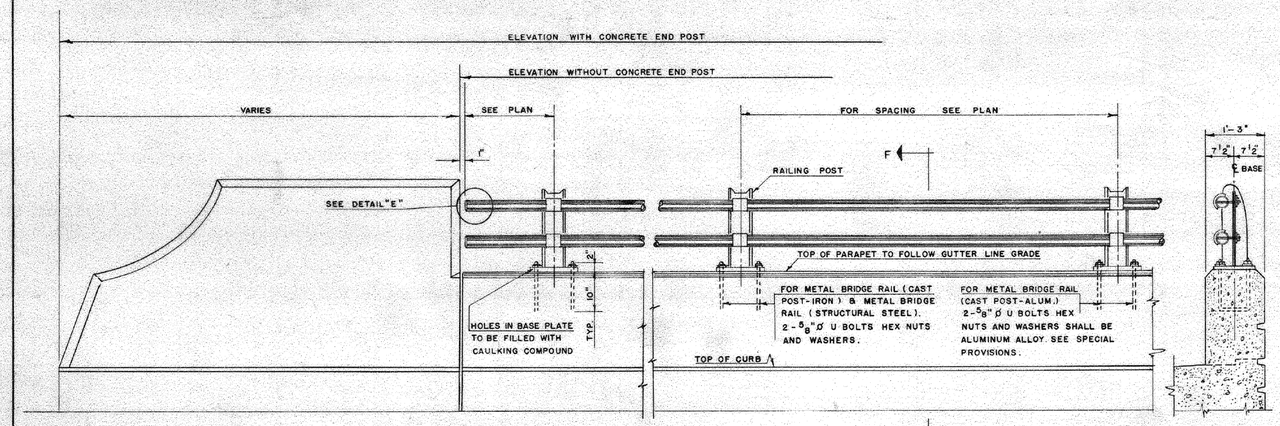

ELEVATION
CONC. END POST AND RAIL
SCALE 3/4" = 1'-0"

SECTION F-F
SCALE 3/4" = 1'-0"

METAL BRIDGE RAIL
(STRUCTURAL STEEL)

ALL POSTS TO BE 6 WF 20 STRUCTURAL STEEL.
ALL RAILS TO BE 2 1/2"ø STANDARD STEEL PIPE.
RAILING POSTS SHALL BE VERTICAL.
IF NECESSARY SHIM WITH LEAD WOOL AND CAULK. COST TO BE INCLUDED IN ITEM METAL BRIDGE RAIL. (STRUCTURAL STEEL.)
FOR PAINTING SEE SPECIAL PROVISIONS.
ALL POSTS & BASE PLATES TO BE OF STRUCTURAL STEEL CONFORMING TO A.S.T.M. A-7.

METAL BRIDGE RAIL
(CAST POST - IRON)

ALL POSTS TO BE MALLEABLE IRON CASTING CONFORMING TO A.S.T.M. A-47 GRADE 35018 OR DUCTILE IRON CASTING CONFORMING TO A.S.T.M. A-339.
ALL RAILS TO BE 2 1/2"ø STANDARD STEEL PIPE.
RAILING POSTS SHALL BE VERTICAL.
IF NECESSARY SHIM WITH LEAD WOOL AND CAULK. COST TO BE INCLUDED IN ITEM METAL BRIDGE RAIL (CAST POST-IRON).
FOR PAINTING SEE SPECIAL PROVISIONS.

METAL BRIDGE RAIL
(CAST POST - ALUMINUM)

ALL POSTS TO BE CAST OF ALUMINUM. SEE SPECIAL PROVISION.
ALL RAILS TO BE 3" O.D. X 2.625" I.D. ALUMINUM TUBING. SEE SPECIAL PROVISIONS.
RAILING POSTS SHALL BE VERTICAL.
IF NECESSARY SHIM WITH ALUMINUM SHEETS AND CAULK.
COST TO BE INCLUDED IN ITEM METAL BRIDGE RAIL (CAST POST-ALUM.)
ALUMINUM RAILING AND POSTS SHALL NOT BE PAINTED.

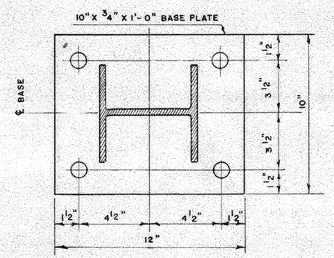

SECTION B-B
SCALE 3" = 1'-0"

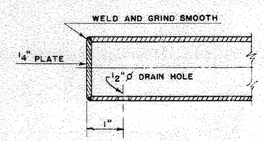

DETAIL "E"
NOT TO SCALE

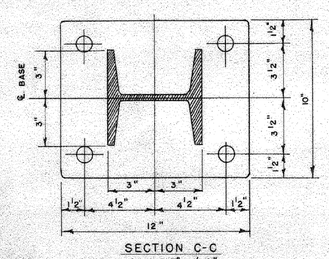

SECTION C-C
SCALE 3" = 1'-0"

GENERAL NOTES:

UNLESS OTHERWISE SPECIFIED ON THE PLANS OR IN THE SPECIAL PROVISIONS METAL BRIDGE RAIL MAY BE: METAL BRIDGE RAIL (STRUCTURAL STEEL). METAL BRIDGE RAIL (CAST POST-IRON) OR METAL BRIDGE RAIL (CAST POST-ALUMINUM).
COST OF FURNISHING AND SETTING 5/8"ø U BOLTS, HEX NUTS AND WASHERS TO BE INCLUDED IN ITEM "METAL BRIDGE RAIL."

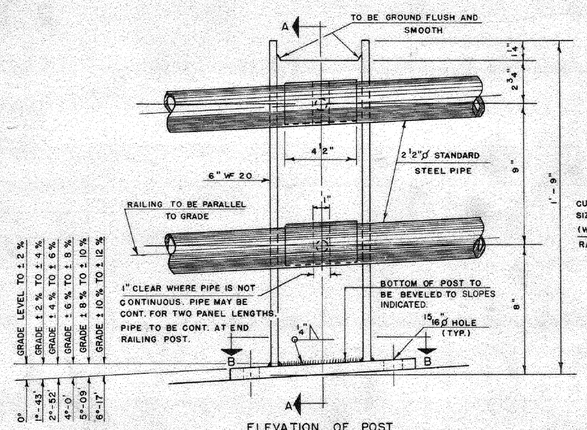

ELEVATION OF POST
SCALE 3" = 1'-0"

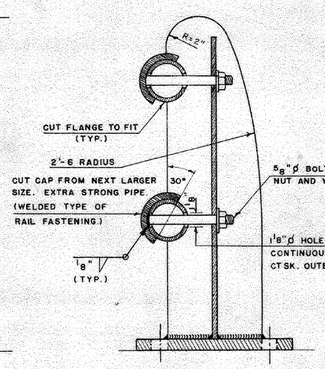

SECTION A-A
SCALE 3" = 1'-0

DETAILS
STRUCTURAL STEEL POST
FOR METAL BRIDGE RAIL (STUCTURAL STEEL)

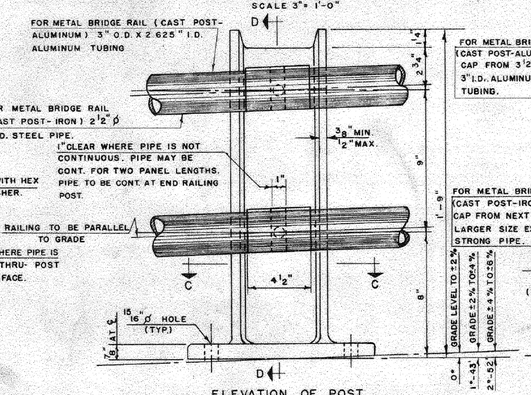

ELEVATION OF POST
SCALE 3" = 1'-0"

NOTE

DETAILS OF METAL BRIDGE RAILING AND FASTENING SIMILAR TO DETAILS SHOWN FOR METAL BRIDGE RAILING. (STRUCTURAL STEEL.)

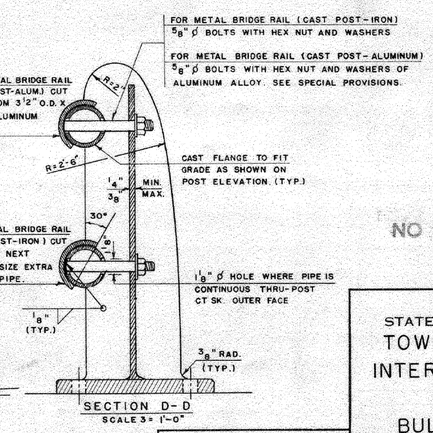

SECTION D-D
SCALE 3" = 1'-0"

DETAILS
CAST POST
FOR METAL BRIDGE RAIL (CAST POST-IRON)
AND
FOR METAL BRIDGE RAIL (CAST POST-ALUMINUM)

NO REVISIONS SUBMITTED FOR THIS SHEET

CONNECTICUT
STATE HIGHWAY DEPARTMENT
TOWN OF SOUTHBURY
INTERSTATE ROUTE 84
UNDER
BULLET HILL ROAD
METAL BRIDGE RAIL

REVISIONS		
NO.	DATE	DESCRIPTION
1	1-13-61	CORRECTED AS PER CH.D. DWG. APPROVED 10-20-60

DESIGNED BY C.H.D.
SCALES AS NOTED
MADE BY G.M.K. & G.J.Z. DATE 4-29-60
CHECKED BY A.K. DATE 12-19-60
APPROVED Howard W. Moore DATE 12-15-60
PROJECT NO. 130-95
BRIDGE SHEET NO. 9 OF 9

130 95 M 200 01 124

FOR REFERENCE ONLY

REV.	DATE	REVISION DESCRIPTION	SHEET NO.

THE INFORMATION, INCLUDING ESTIMATED QUANTITIES OF WORK, SHOWN ON THESE SHEETS IS BASED ON LIMITED INVESTIGATIONS BY THE STATE AND IS IN NO WAY WARRANTED TO INDICATE THE CONDITIONS OF ACTUAL QUANTITIES OF WORK WHICH WILL BE REQUIRED.

Plotted Date: 8/8/2017

DESIGNER/DRAFTER: D.C./S.C.
CHECKED BY: J.H.M. II
NOT TO SCALE

STATE OF CONNECTICUT
DEPARTMENT OF TRANSPORTATION

Filename: ...\SB_MSH_2_174_402_BR_01154_S_51_BRIDGE-RAIL.dgn

SIGNATURE/BLOCK:
Close, Jensen and Miller, P.C.
1137 Silas Deane Highway
Wethersfield, CT 06109

PROJECT TITLE: BEAM END REPAIR AND BEARING REPLACEMENT IN DISTRICT 4

TOWN: SOUTHBURY

DRAWING TITLE: METAL BRIDGE RAIL BRIDGE NO. 01154

PROJECT NO. 174-402
DRAWING NO. S-51
SHEET NO. 03.51

GENERAL NOTES:

TRAFFIC: ALL WORK SHALL BE DONE IN ACCORDANCE WITH THE SPECIAL PROVISIONS, "MAINTENANCE AND PROTECTION OF TRAFFIC" & "PROSECUTION AND PROGRESS".

ACCESS: THE CONTRACTOR SHALL PROVIDE ACCESS AND PROTECTION TO THE WORK AREAS BENEATH THE BRIDGE UTILIZING SCAFFOLDING, UNDER THE BRIDGE WORK PLATFORMS, SAFETY NETS, LADDERS AND UNDER BRIDGE INSPECTION EQUIPMENT AS REQUIRED. THIS WORK SHALL BE DESIGNED BY A PROFESSIONAL ENGINEER EMPLOYED BY THE CONTRACTOR. THE DESIGN SHALL BE IN ACCORDANCE WITH THE AASHTO GUIDE SPECIFICATION FOR BRIDGE TEMPORARY WORKS TO SUIT THE CONTRACTOR'S MEANS AND METHODS OF CONSTRUCTION. PAYMENT TO BE INCLUDED UNDER THE RESPECTIVE ITEM. SEE CONTRACT SPECIAL PROVISIONS FOR ADDITIONAL INFORMATION.

UTILITIES: THE CONTRACTOR SHALL VERIFY THE SIZE AND LOCATION OF ALL UTILITIES WITHIN THE PROJECT LIMITS PRIOR TO THE START OF CONSTRUCTION AND SHALL PROTECT ALL EXISTING UTILITIES LOCATED WITHIN THE VICINITY OF THE CONSTRUCTION SITE. THE CONTRACTOR SHALL TAKE NECESSARY PRECAUTIONS WHEN WORKING NEAR UTILITIES SO AS TO NOT DISTURB THEM OR PLACE ANY LOAD OR EQUIPMENT ON THEM. ALL UTILITY COMPANIES SHALL BE NOTIFIED 48 HOURS PRIOR TO ANY WORK AFFECTING CABLES, CONDUITS, OR OTHER UTILITIES.

ALL STEEL ELEMENTS WITHIN THE PAINTING LIMITS OF BEAMS, INCLUDING STIFFENERS, CONNECTION PLATES, DIAPHRAGMS, AND ALL STEEL ELEMENTS OF BEARINGS SHALL BE PAINTED.

PAINT REMOVAL AND PAINTING LIMITS OF BEAMS SHALL BE INCLUDED FOR PAYMENT UNDER THE ITEM "ABRASIVE BLAST CLEANING AND FIELD PAINTING OF STRUCTURE (SITE NO. 3)".

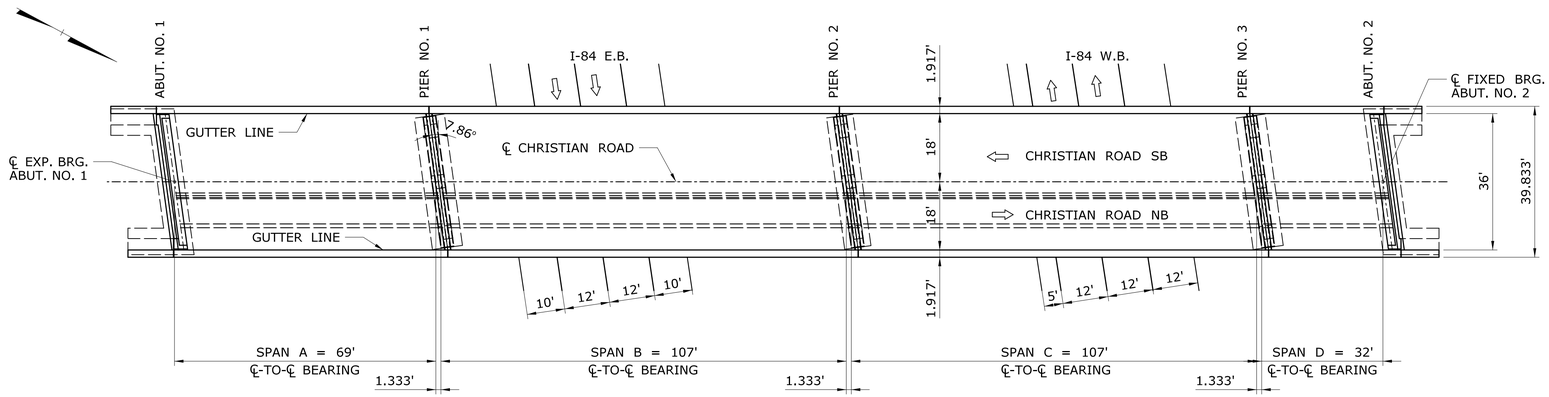

PLAN BRIDGE NO. 01161, SITE NO. 3
CHRISTIAN ROAD OVER I-84
SCALE: 1" = 20'

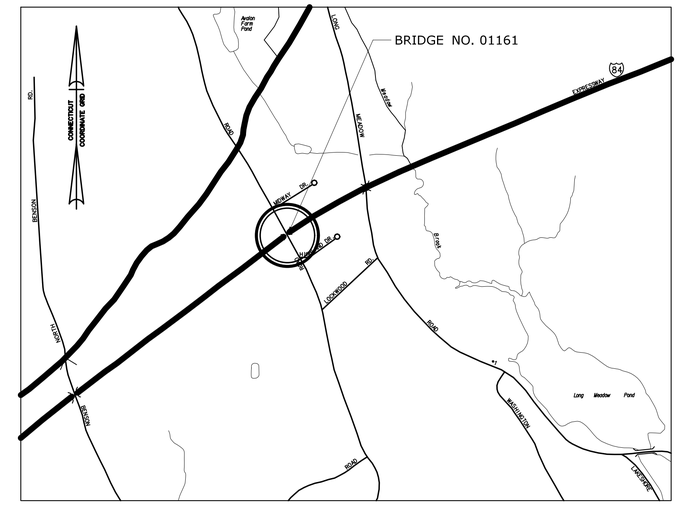

LOCATION MAP SITE NO. 3
SCALE: 1" = 2000'

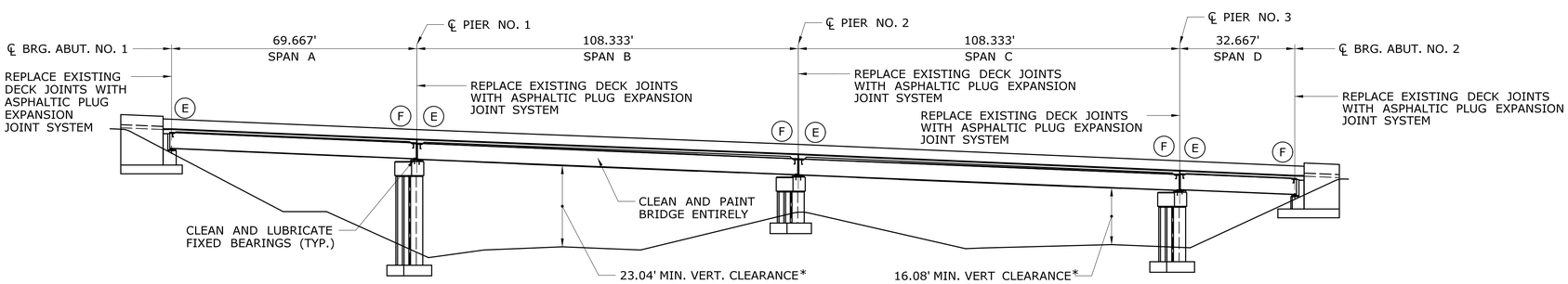

(F) FIXED BEARINGS
(E) EXPANSION BEARINGS

ELEVATION
SCALE: 1" = 20'

* MINIMUM 14'-6" VERTICAL CLEARANCE SHALL BE MAINTAINED DURING ALL PHASES OF CONSTRUCTION

GENERAL DESCRIPTON OF WORK:

1. CLEAN, PAINT, AND REPAIR STRUCTURAL STEEL.
2. REPLACE ALL EXISTING DECK JOINTS WITH NEW ASPHALTIC PLUG JOINTS.
3. CLEAN AND PAINT BRIDGE ENTIRELY.
4. CLEAN AND LUBRICATE FIXED BEARINGS.

REFERENCES:

1. SEE DWG NOS. S-09 TO S-11, S-14, AND S-15 FOR ASPHALTIC PLUG JOINT NOTES AND DETAILS.

REV.	DATE	REVISION DESCRIPTION	SHEET NO.

THE INFORMATION, INCLUDING ESTIMATED QUANTITIES OF WORK, SHOWN ON THESE SHEETS IS BASED ON LIMITED INVESTIGATIONS BY THE STATE AND IS IN NO WAY WARRANTED TO INDICATE THE CONDITIONS OF ACTUAL QUANTITIES OF WORK WHICH WILL BE REQUIRED.

Plotted Date: 8/8/2017

DESIGNER/DRAFTER: D.C./S.C.
CHECKED BY: J.H.M. II
SCALE AS NOTED

STATE OF CONNECTICUT
DEPARTMENT OF TRANSPORTATION

Filename: ...\SB_MSH_3_174_402_BR_01161_S_52_GEN_PLAN.dgn

SIGNATURE/BLOCK:
Close, Jensen and Miller, P.C.
1137 Silas Deane Highway
Wethersfield, CT 06109

PROJECT TITLE:
BEAM END REPAIR AND BEARING REPLACEMENT IN DISTRICT 4

TOWN: **MIDDLEBURY**

DRAWING TITLE: **GENERAL PLAN BRIDGE NO. 01161**

PROJECT NO. **174-402**
DRAWING NO. **S-52**
SHEET NO. **03.52**

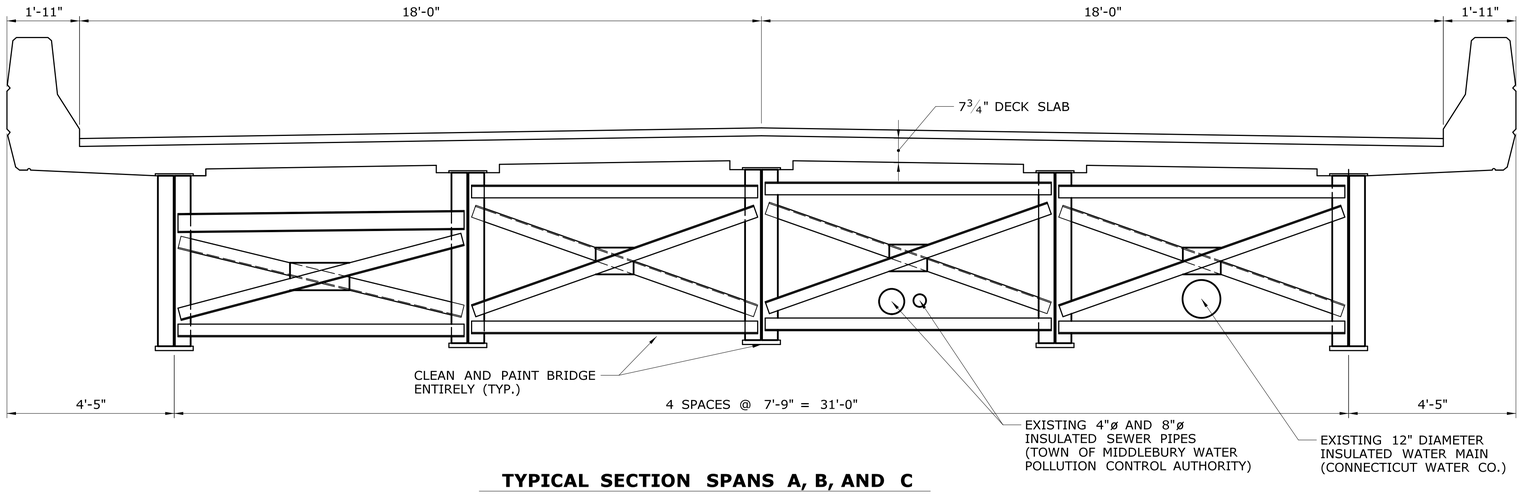

TYPICAL SECTION SPANS A, B, AND C

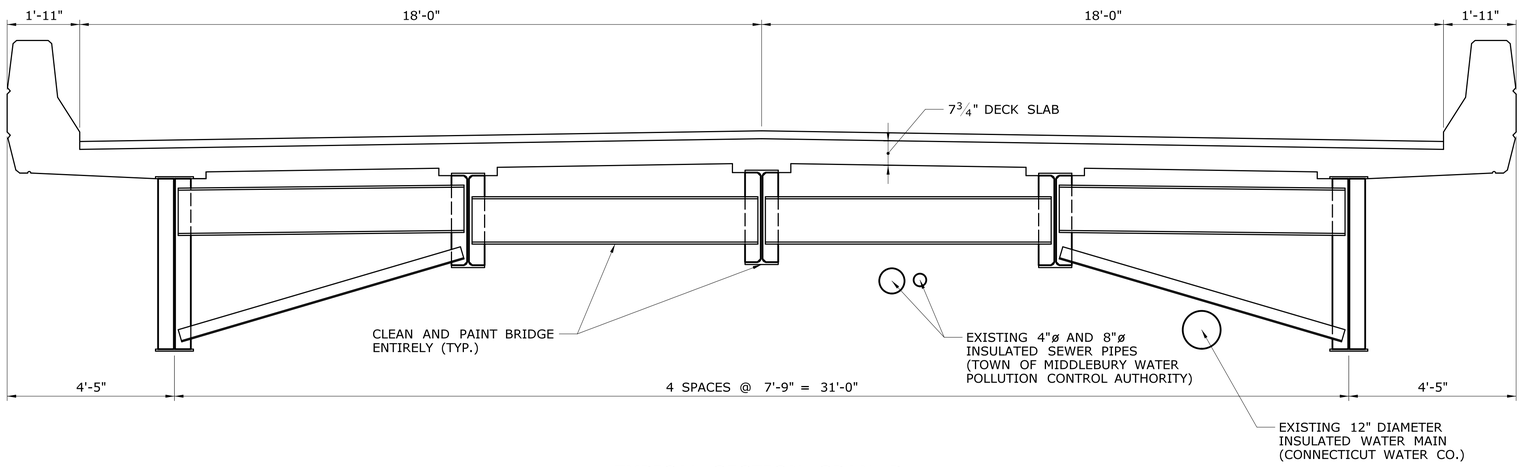

TYPICAL SECTION SPAN D

REFERENCES:

1. SEE DWG. NOS. S-56 TO S-59 FOR PAINTING DETAILS.
2. SEE DWG. NOS. S-56 TO S-58 FOR ALL STRUCTURAL STEEL MEMBER SIZES.
3. SEE DWG. NO. S-58 FOR DIAPHRAGM DETAILS.
4. SEE DWG. NO. S-59 FOR BEARING DETAILS.

NOTE:

THE CONTRACTOR IS ADVISED THAT THERE ARE EXISTING EVERSOURCE ENERGY RMC CONDUITS ATTACHED TO THE SOUTH FACE OF PIER 2 AND A CONTROL BOX ATTACHED TO THE EAST FACE OF THE EAST COLUMN OF PIER 2.

REV.	DATE	REVISION DESCRIPTION	SHEET NO.

THE INFORMATION, INCLUDING ESTIMATED QUANTITIES OF WORK, SHOWN ON THESE SHEETS IS BASED ON LIMITED INVESTIGATIONS BY THE STATE AND IS IN NO WAY WARRANTED TO INDICATE THE CONDITIONS OF ACTUAL QUANTITIES OF WORK WHICH WILL BE REQUIRED.

Plotted Date: 8/8/2017

DESIGNER/DRAFTER: D.C./S.C.
CHECKED BY: J.H.M. II
SCALE: 1/2" = 1'-0"

STATE OF CONNECTICUT
DEPARTMENT OF TRANSPORTATION

Filename: ...\SB_MSH_3_174_402_BR_01161_S_53_SECTIONS.dgn

SIGNATURE/ BLOCK:
Close, Jensen and Miller, P.C.
1137 Silas Deane Highway
Wethersfield, CT 06109

PROJECT TITLE:
BEAM END REPAIR AND BEARING REPLACEMENT IN DISTRICT 4

TOWN: **MIDDLEBURY**

DRAWING TITLE: **TYPICAL SECTIONS BRIDGE NO. 01161**

PROJECT NO. **174-402**
DRAWING NO. **S-53**
SHEET NO. **03.53**

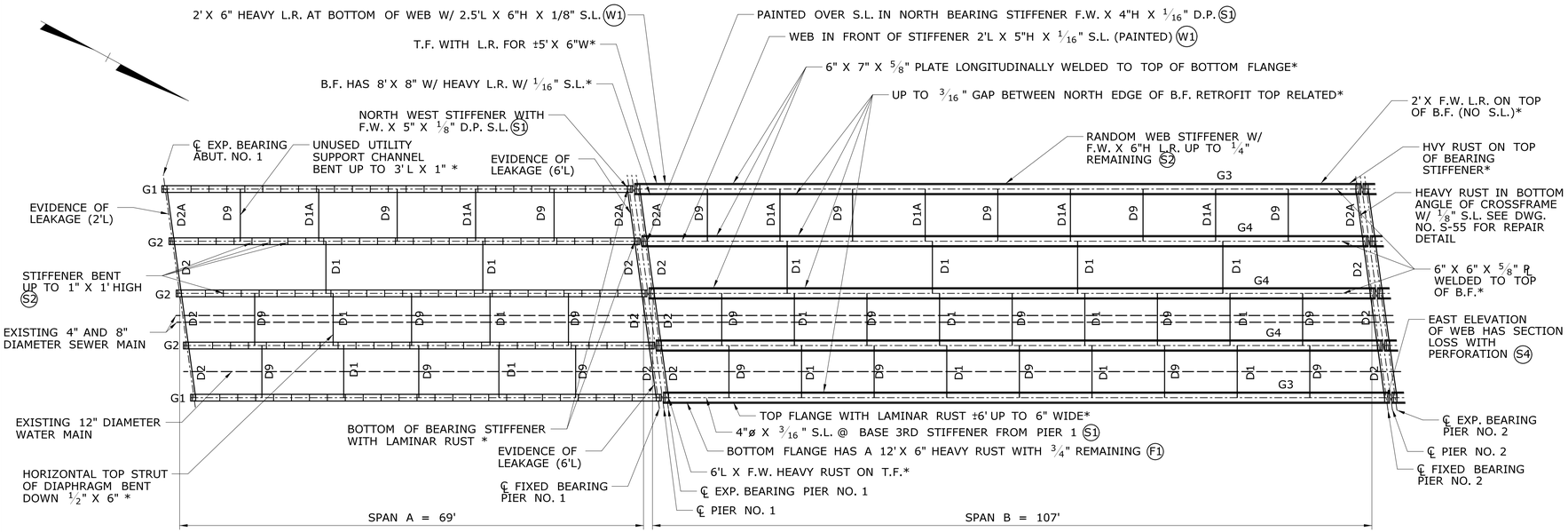

PARTIAL FRAMING PLAN

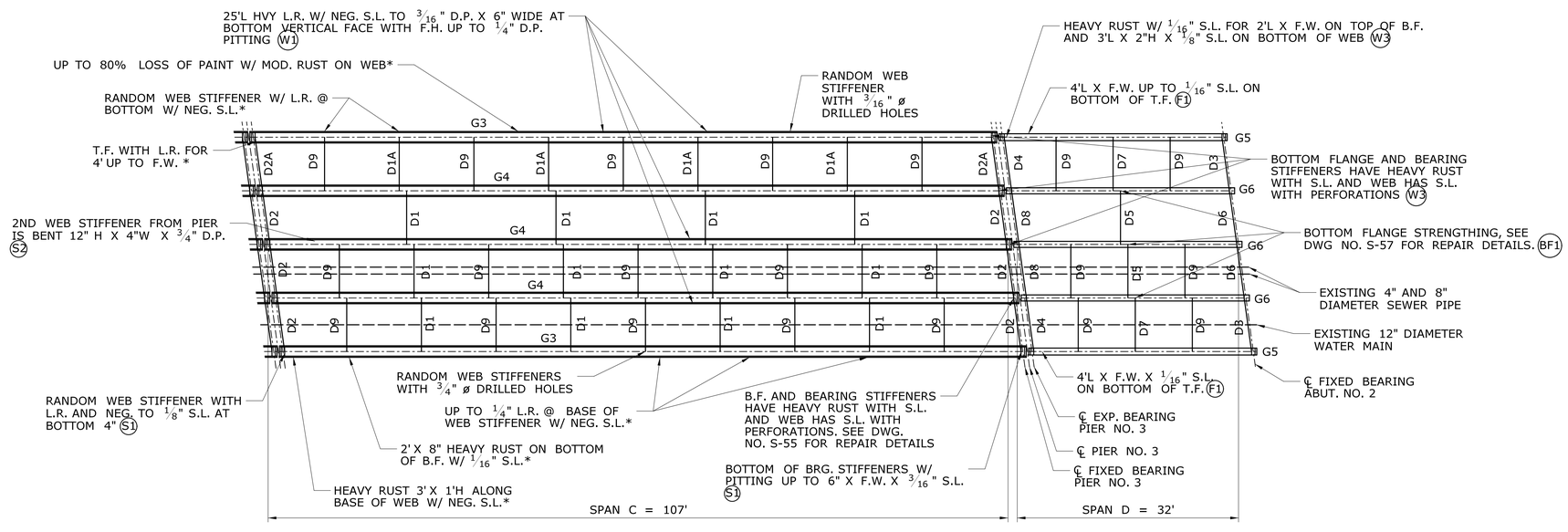

PARTIAL FRAMING PLAN

STRUCTURAL STEEL NOTES:

1. STRUCTURAL STEEL (LOW ALLOY) FOR ALL SUPERSTRUCTURE STEEL REPAIRS SHALL CONFORM TO AASHTO M270, GRADE 50 AND SHALL BE PAID UNDER ITEM "STRUCTURAL STEEL REPAIRS (SITE NO. 3)", SEE SPECIAL PROVISIONS. STRUCTURAL STEEL SHALL BE FREE OF BURRS, NICKS OR GAUGES. THE ESTIMATED WEIGHT OF STRUCTURAL STEEL IS 25 CWT AND IS PROVIDED FOR INFORMATION ONLY.
2. REMOVAL OF DETERIORATED PORTIONS OF EXISTING STRUCTURAL STEEL, REGARDLESS OF REMOVAL METHODS, SHALL NOT BE MEASURED FOR PAYMENT. THE COST OF WHICH SHALL BE INCLUDED IN THE ITEM "STRUCTURAL STEEL REPAIRS (SITE NO. 3)".
3. MULTIPLE PASS WELDS, INSPECTED BY THE MAGNETIC PARTICLE METHOD SHALL HAVE EACH PASS OR LAYER INSPECTED AND ACCEPTED BEFORE PROCEEDING TO THE NEXT PASS OR LAYER, AS DETERMINED BY THE ENGINEER.
4. WELDING ELECTRODES SHALL HAVE THE SAME CORROSION RESISTANCE AS THE BASE METAL.
5. ALL REPAIR FILLET WELDS SHALL BE INSPECTED BY THE MAGNETIC PARTICLE METHOD. ALL COMPLETE JOINT PENETRATION WELDS SHALL BE INSPECTED BY ULTRASONIC TESTING.

STEEL FRAMING DETERIORATION NOTES:

1. THE DETERIORATION AND REPAIR DIMENSIONS AND LOCATIONS DEPICTED ON THE FRAMING PLAN ARE BASED ON LIMITED FIELD OBSERVATIONS AND BRIDGE SAFETY IN-DEPTH INSPECTION REPORT DATED 08/09/2016. THE INFORMATION IS INTENDED TO BE USED AS A GUIDE AND DOES NOT NECESSARILY REFLECT THE CURRENT CONDITION OF THE STRUCTURE. THE EXACT LOCATION AND LIMITS OF DETERIORATED STEEL TO BE REPAIRED AND THE PROPOSED REPAIR DETAIL SHALL BE DELINEATED AND DETERMINED BY THE ENGINEER DURING CONSTRUCTION. NO MATERIAL SHALL BE ORDERED OR FABRICATED UNTIL THE ENGINEER HAS APPROVED REPAIR LOCATIONS. EXISTING STRUCTURAL STEEL A.S.T.M., A-373 GRADE 33 SHALL UTILIZE WELDED REPAIR DETAILS.
2. NO STEEL REPAIRS SHALL BE PERFORMED WITHOUT THE PRIOR APPROVAL OF THE ENGINEER.
3. REPAIR WORK SHALL BE PERFORMED IN ACCORDANCE WITH THE SUGGESTED SEQUENCE OF STEEL REPAIRS (SEE DWG. NO. S-16).

REFERENCES:

1. SEE DWG. NOS. S-16 TO S-19 FOR STEEL REPAIR NOTES AND DETAILS.
2. SEE DWG. NOS. S-56 TO S-59 FOR PAINTING DETAILS.
3. SEE DWG. NO. S-59 FOR BEARING DETAILS.
4. SEE DWG. NOS. S-56 TO S-58 FOR ALL STRUCTURAL STEEL MEMBER SIZES.
5. SEE DWG NO. S-20 FOR JACKING SUPPORT SYSTEM DETAILS AND NOTES.

LEGEND

C1 TO C6 CONNECTION PLATE REPAIR (SEE DWG. NO. S-19)
F1 TO F2 FLANGE REPAIR (SEE DWG. NO. S-17)
S1 TO S4 STIFFENER REPAIR (SEE DWG. NOS. S-17 TO S-18)
W1 TO W3 WEB REPAIR (SEE DWG. NOS. S-17 TO S-18)

KEY

F.H. = FULL HEIGHT
F.W. = FULL WIDTH
T.F. = TOP FLANGE
B.F. = BOTTOM FLANGE
L.R. = LAMINAR RUST
S.L. = SECTION LOSS
NEG. = NEGLIGIBLE

* = NO REPAIR REQUIRED OR AS DIRECTED BY THE ENGINEER

REV.	DATE	REVISION DESCRIPTION	SHEET NO.

THE INFORMATION, INCLUDING ESTIMATED QUANTITIES OF WORK, SHOWN ON THESE SHEETS IS BASED ON LIMITED INVESTIGATIONS BY THE STATE AND IS IN NO WAY WARRANTED TO INDICATE THE CONDITIONS OF ACTUAL QUANTITIES OF WORK WHICH WILL BE REQUIRED.

Plotted Date: 8/8/2017

DESIGNER/DRAFTER: D.C./S.C.
CHECKED BY: J.H.M. II
SCALE: 1" = 10'

STATE OF CONNECTICUT
DEPARTMENT OF TRANSPORTATION

Filename: ...\SB_MSH_3_174_402_BR_01161_S_54_FRAMING_PLAN.dgn

SIGNATURE/BLOCK:
Close, Jensen and Miller, P.C.
1137 Silas Deane Highway
Wethersfield, CT 06109

PROJECT TITLE:
BEAM END REPAIR AND BEARING REPLACEMENT IN DISTRICT 4

TOWN: MIDDLEBURY

DRAWING TITLE: FRAMING PLAN BRIDGE NO. 01161

PROJECT NO. 174-402
DRAWING NO. S-54
SHEET NO. 03.54

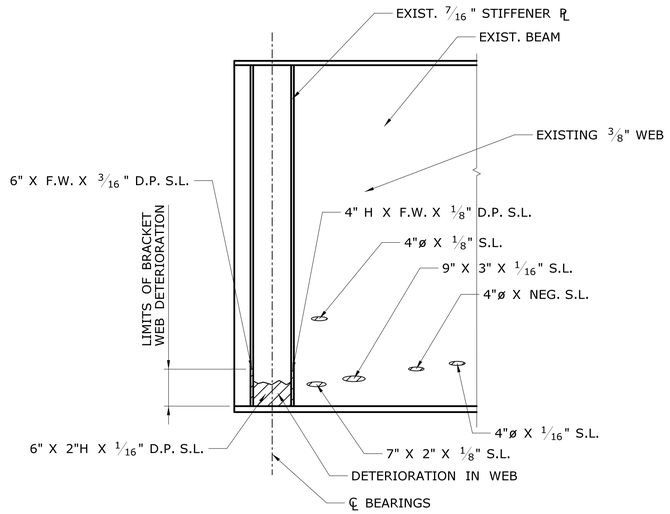

EXISTING CONDITIONS - EAST ELEVATION

SCALE: 1" = 1'-0"

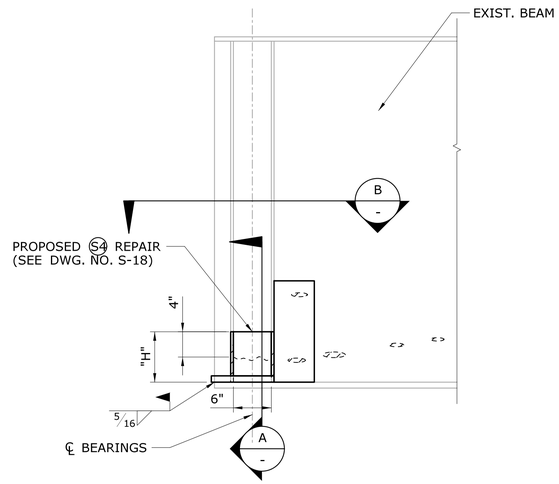

PROPOSED REPAIR - EAST ELEVATION

SCALE: 1" = 1'-0"

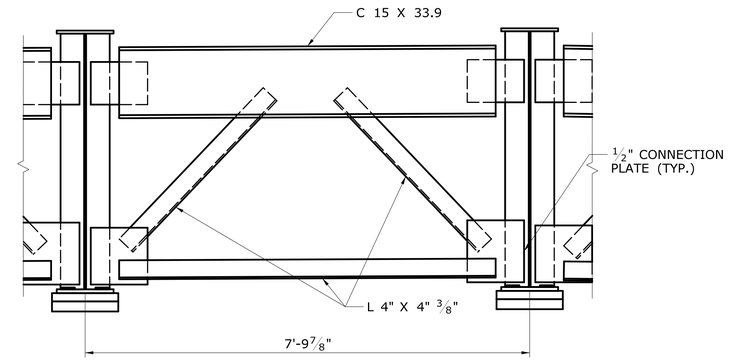

EXISTING CONDITION

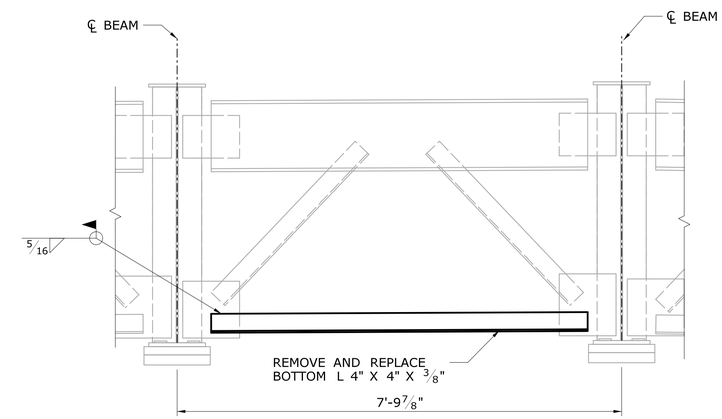

PROPOSED CONDITION

SPAN B END CROSSFRAME AT PIER 2

SCALE: 3/4" = 1'-0"

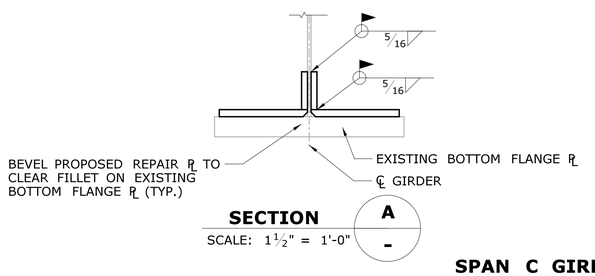

SECTION

SCALE: 1 1/2" = 1'-0"

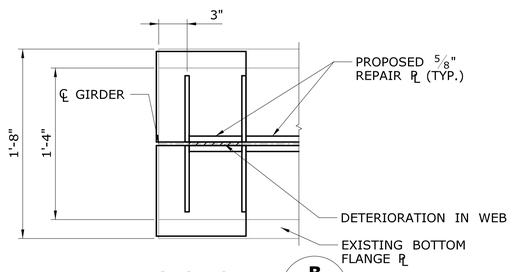

SECTION

SCALE: 1 1/2" = 1'-0"

SPAN C GIRDER 4 AT PIER 3

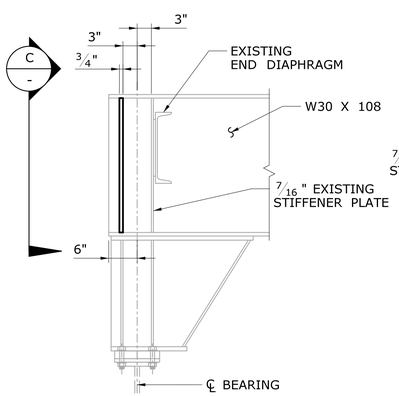

PIER END

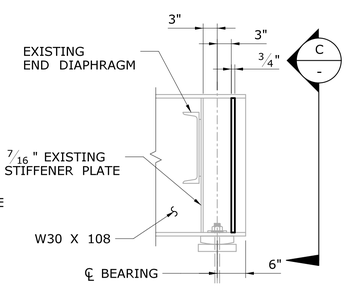

ABUTMENT END

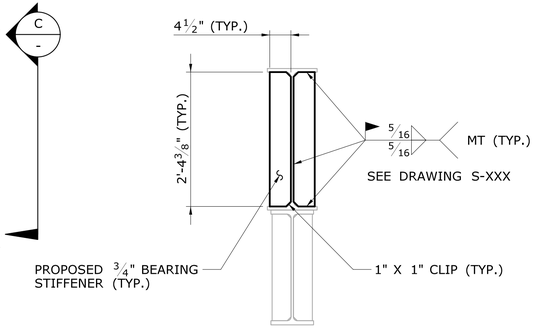

SECTION

GIRDER STRENGTHENING - G6

SCALE: 3/4" = 1'-0"

END CROSSFRAME MODIFICATION NOTES:

1. THE EXISTING CROSS FRAME ANGLE REPLACEMENT TO BE INCLUDED FOR PAYMENT UNDER THE ITEM "STRUCTURAL STEEL REPAIRS (SITE NO. 3)."
2. PAINT REMOVAL REQUIRED FOR THE REPLACEMENT OF THE EXISTING END CROSS FRAME ANGLE IS WITHIN THE LIMITS OF STRUCTURE PAINTING AND WILL BE INCLUDED FOR PAYMENT UNDER "ABRASIVE BLAST CLEANING AND FIELD PAINTING OF STRUCTURE (SITE NO. 3)".

REFERENCE:

1. SEE DWG. NO. S-54 FOR LOCATIONS OF DETERIORATION.
2. SEE DWG. NO. S-54 FOR STRUCTURAL STEEL NOTES AND STEEL FRAMING DETERIORATION NOTES.
3. SEE DWG. NOS. S-56 TO S-58 FOR ALL STRUCTURAL STEEL MEMBER SIZES.

REV.	DATE	REVISION DESCRIPTION	SHEET NO.

THE INFORMATION, INCLUDING ESTIMATED QUANTITIES OF WORK, SHOWN ON THESE SHEETS IS BASED ON LIMITED INVESTIGATIONS BY THE STATE AND IS IN NO WAY WARRANTED TO INDICATE THE CONDITIONS OF ACTUAL QUANTITIES OF WORK WHICH WILL BE REQUIRED.

Plotted Date: 8/8/2017

DESIGNER/DRAFTER: D.C./S.C.
CHECKED BY: J.H.M. II
SCALE AS NOTED

STATE OF CONNECTICUT
DEPARTMENT OF TRANSPORTATION

Filename: ...\SB_MSH_3.174_402_BR_01161_S_55_STEEL_REPAIRS-1.dgn

SIGNATURE/BLOCK:
Close, Jensen and Miller, P.C.
1137 Silas Deane Highway
Wethersfield, CT 06109

PROJECT TITLE:
BEAM END REPAIR AND BEARING REPLACEMENT IN DISTRICT 4

TOWN: MIDDLEBURY

DRAWING TITLE: STEEL REPAIRS BRIDGE NO. 01161

PROJECT NO. 174-402
DRAWING NO. S-55
SHEET NO. 03.55

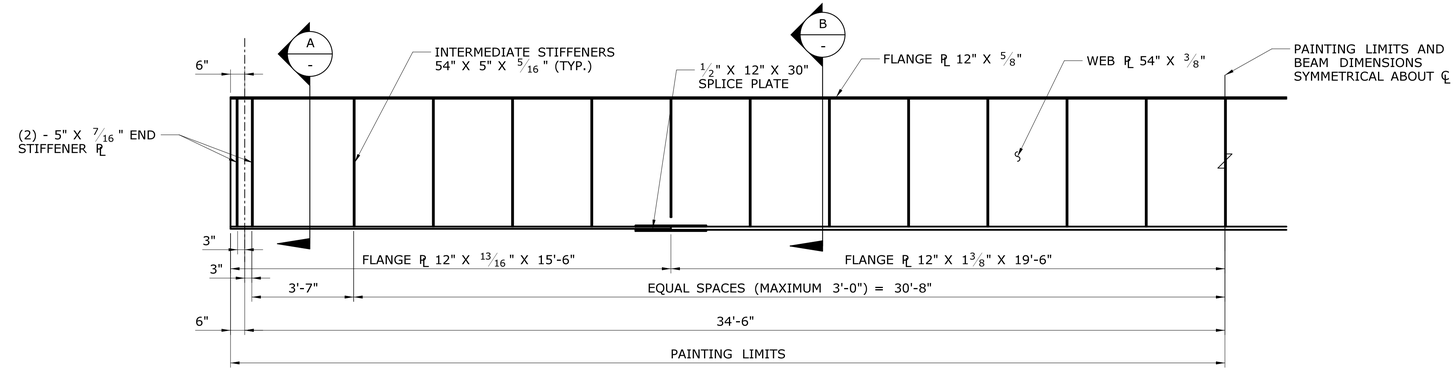

TYPICAL SPAN A PAINTING LIMITS (G1 AND G2)

SCALE: 3/8" = 1'-0"

PAINTING NOTES:

PAINTING NOTES SEE DWG. NO. S-59.

REFERENCES:

1. SEE DWG. NO. S-57 FOR PAINTING LIMITS OF SPAN D.
2. SEE DWG. NO. S-58 FOR DIAPHRAGM DIMENSIONS AND PAINTING DETAILS.
3. SEE DWG. NO. S-59 FOR BEARING DIMENSIONS AND PAINTING LIMITS.

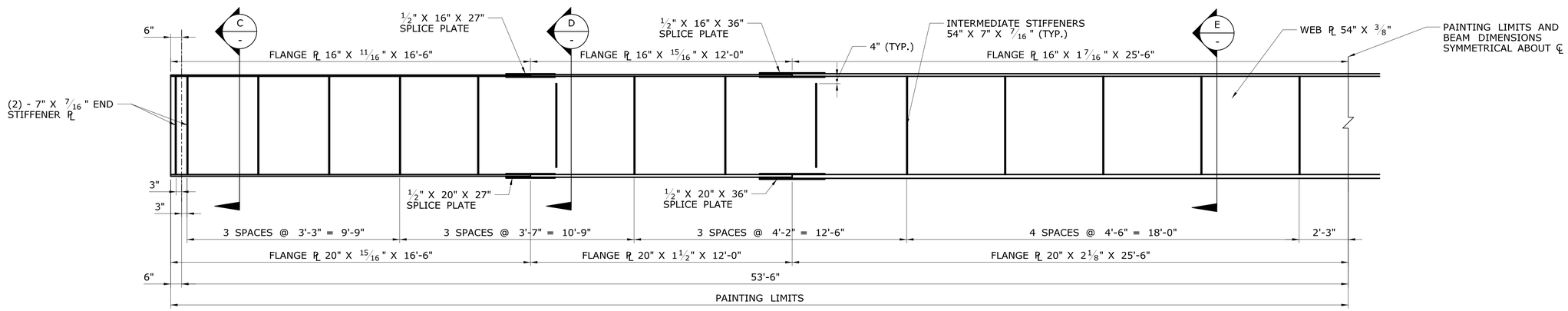

TYPICAL SPANS B AND C PAINTING LIMITS (G3 AND G4)

SCALE: 3/8" = 1'-0"

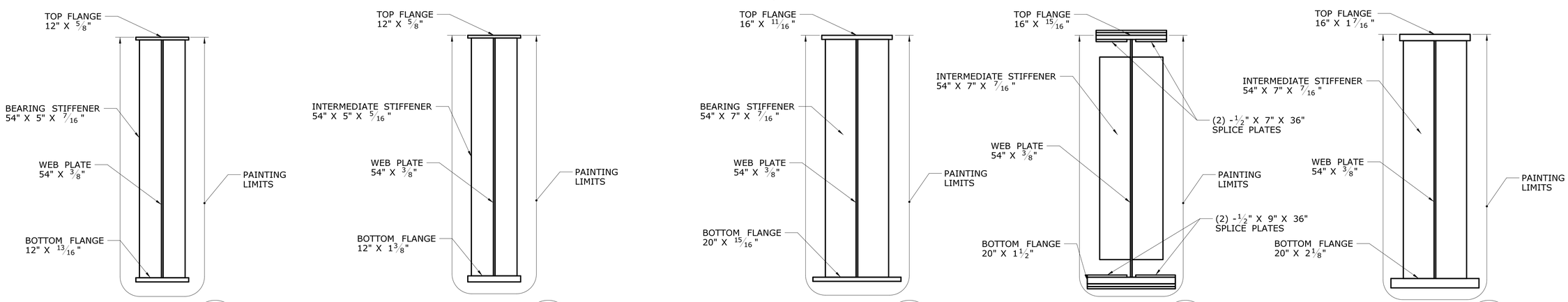

SECTION A — SCALE: 1" = 1'-0"

SECTION B — SCALE: 1" = 1'-0"

SECTION C — SCALE: 1" = 1'-0"

SECTION D — SCALE: 1" = 1'-0"

SECTION E — SCALE: 1" = 1'-0"

REV.	DATE	REVISION DESCRIPTION	SHEET NO.

THE INFORMATION, INCLUDING ESTIMATED QUANTITIES OF WORK, SHOWN ON THESE SHEETS IS BASED ON LIMITED INVESTIGATIONS BY THE STATE AND IS IN NO WAY WARRANTED TO INDICATE THE CONDITIONS OF ACTUAL QUANTITIES OF WORK WHICH WILL BE REQUIRED.

Plotted Date: 8/8/2017

DESIGNER/DRAFTER: D.C./S.C.

CHECKED BY: J.H.M. II

SCALE AS NOTED

STATE OF CONNECTICUT
DEPARTMENT OF TRANSPORTATION

Filename: ...\SB_MSH_3_174_402_BR_01161_S_56_BEAM-PAINT-1.dgn

SIGNATURE/BLOCK:

Close, Jensen and Miller, P.C.
1137 Silas Deane Highway
Wethersfield, CT 06109

PROJECT TITLE:

BEAM END REPAIR AND BEARING REPLACEMENT IN DISTRICT 4

TOWN: **MIDDLEBURY**

DRAWING TITLE: **PAINTING DETAILS - 1 BRIDGE NO. 01161**

PROJECT NO. 174-402

DRAWING NO. S-56

SHEET NO. 03.56

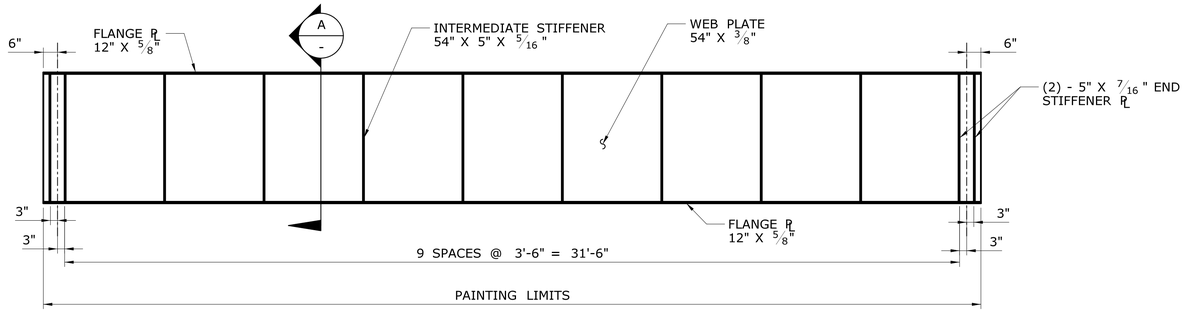

TYPICAL FASCIA BEAM PAINTING LIMITS SPAN D (G5)

SCALE: 3/8" = 1'-0"

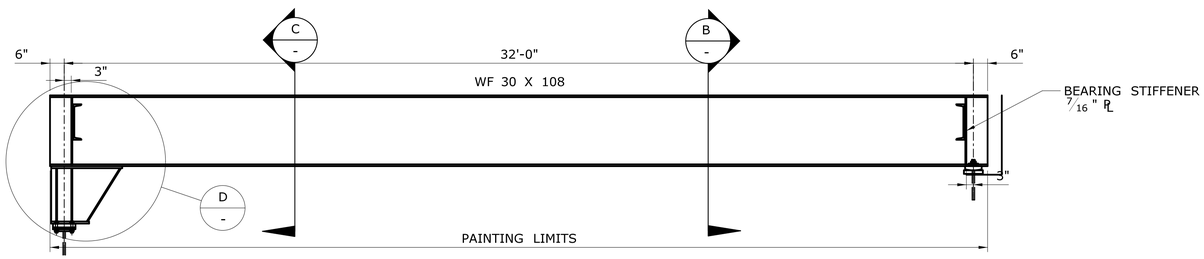

TYPICAL INTERIOR BEAM PAINTING LIMITS SPAN D (G6)

SCALE: 3/8" = 1'-0"

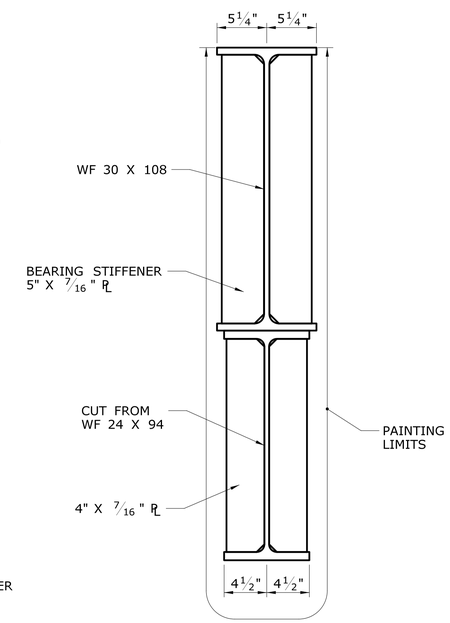

SECTION C

SCALE: 1 1/2" = 1'-0"

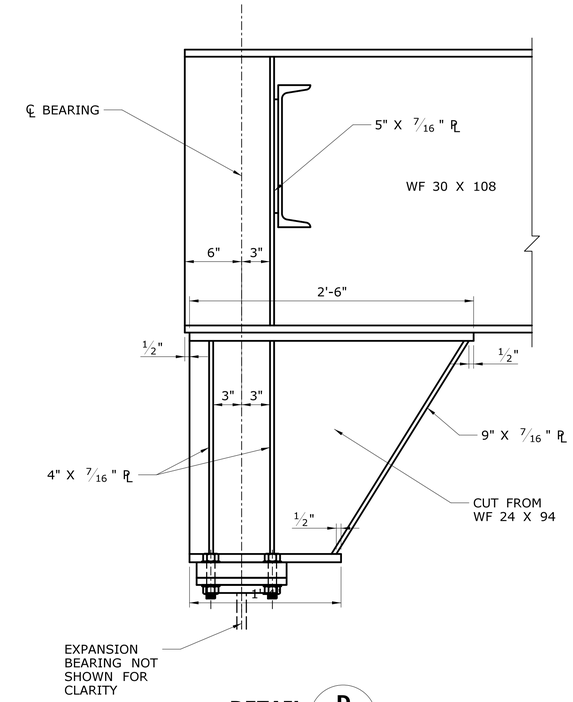

DETAIL D

SCALE: 1 1/2" = 1'-0"

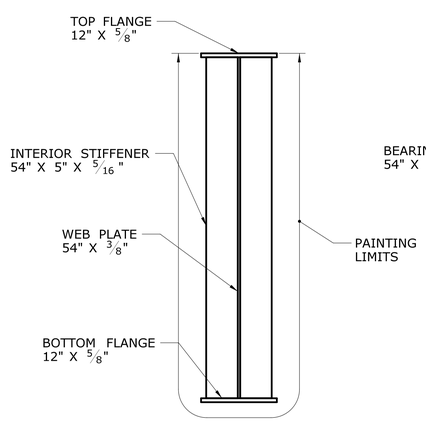

SECTION A

SCALE: 1" = 1'-0"

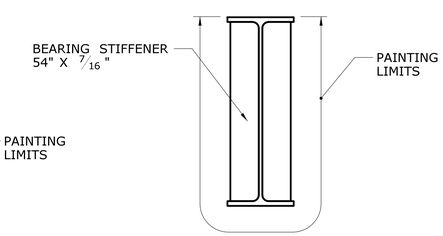

SECTION B

SCALE: 1" = 1'-0"

PAINTING NOTES:

PAINTING NOTES SEE DWG. NO. S-58.

REFERENCES:

1. SEE DWG. NO. S-56 FOR PAINTING LIMITS OF SPANS A, B, & C.
2. SEE DWG. NO. S-58 FOR DIAPHRAGM DIMENSIONS AND PAINTING DETAILS.
3. SEE DWG. NO. S-59 FOR BEARING DIMENSIONS AND PAINTING LIMITS.

REV.	DATE	REVISION DESCRIPTION	SHEET NO.

THE INFORMATION, INCLUDING ESTIMATED QUANTITIES OF WORK, SHOWN ON THESE SHEETS IS BASED ON LIMITED INVESTIGATIONS BY THE STATE AND IS IN NO WAY WARRANTED TO INDICATE THE CONDITIONS OF ACTUAL QUANTITIES OF WORK WHICH WILL BE REQUIRED.

Plotted Date: 8/8/2017

DESIGNER/DRAFTER: D.C./S.C.

CHECKED BY: J.H.M. II

SCALE AS NOTED

STATE OF CONNECTICUT
DEPARTMENT OF TRANSPORTATION

Filename: ...\SB_MSH_3_174_402_BR_01161_S_57_BEAM-PAINT-2.dgn

SIGNATURE/BLOCK:

Close, Jensen and Miller, P.C.
1137 Silas Deane Highway
Wethersfield, CT 06109

PROJECT TITLE:

BEAM END REPAIR AND BEARING REPLACEMENT IN DISTRICT 4

TOWN: **MIDDLEBURY**

DRAWING TITLE: **PAINTING DETAILS - 2 BRIDGE NO. 01161**

PROJECT NO. **174-402**

DRAWING NO. **S-57**

SHEET NO. **03.57**

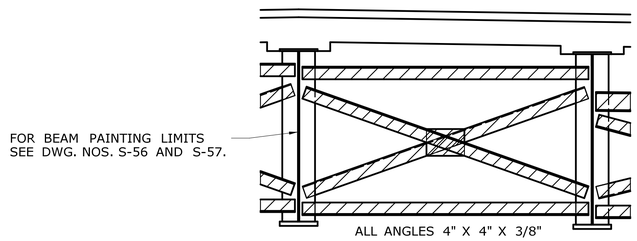

TYPICAL PAINTING LIMITS AT D1

SCALE: 1/2" = 1'-0"

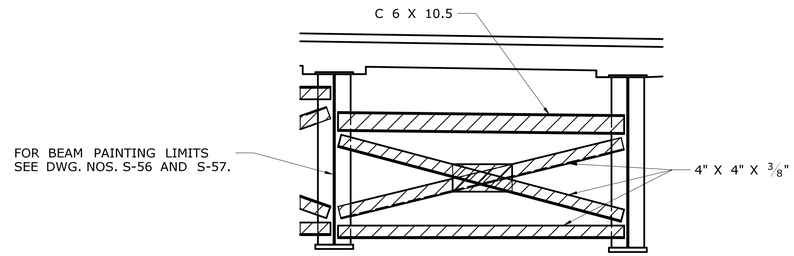

TYPICAL PAINTING LIMITS AT D1-A

SCALE: 1/2" = 1'-0"

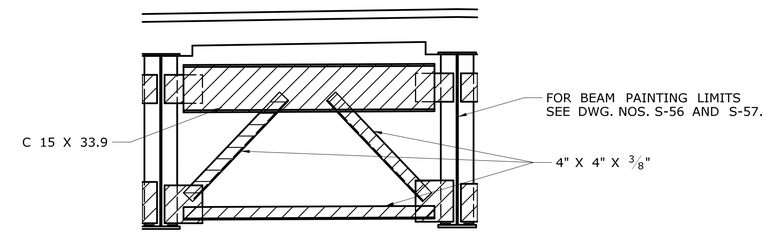

TYPICAL PAINTING LIMITS D2/D2-A/D4/D4-A/D-8

SCALE: 1/2" = 1'-0"

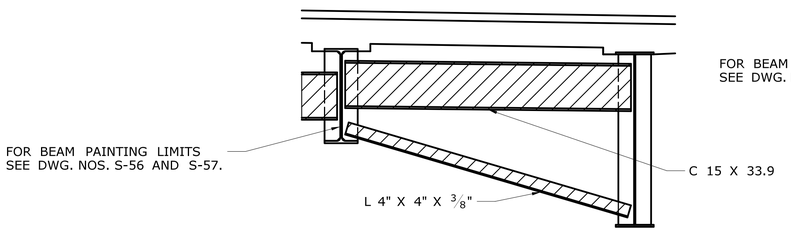

TYPICAL PAINTING LIMITS AT D3/D7

SCALE: 1/2" = 1'-0"

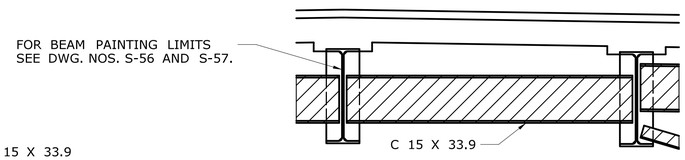

TYPICAL PAINTING LIMITS AT D5/D6

SCALE: 1/2" = 1'-0"

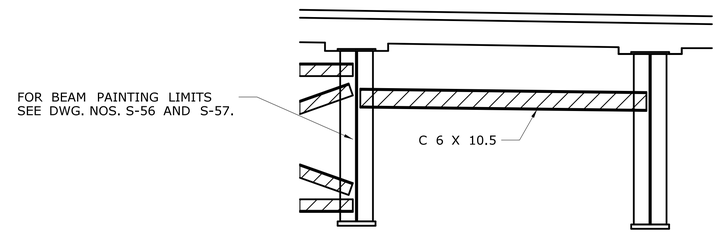

TYPICAL PAINTING LIMITS AT D9

UTILITY SUPPORT
SCALE: 1/2" = 1'-0"

PAINTING NOTES:

1. THE LIMITS OF BEAM PAINTING ARE THE HATCHED AREAS SHOWN ON THIS SHEET. ALL EXPOSED SURFACES OF STEEL MEMBERS, SUCH AS INTERIOR AND END DIAPHRAGMS, STIFFENERS/CONNECTION PLATES, SOLE AND LOAD PLATES OF EXISTING BEARINGS THAT ARE WITHIN THE LIMITS SHALL BE PAINTED. FULL PAINTING SHALL BE PAID FOR UNDER THE ITEM "ABRASIVE BLAST CLEANING AND FIELD PAINTING OF STRUCTURE (SITE NO. 3)."
2. THE COLOR OF THE TOP COAT ON THE STRUCTURAL STEEL SHALL BE FEDERAL STANDARD 595 COLOR NO. 23522, DEPARTMENT STANDARD COLOR NO. 803 (TAN), EXACT COLOR TO BE DETERMINED BY THE ENGINEER. PROPOSED PAINT TO MATCH EXISTING AS CLOSE AS POSSIBLE.
3. THE CONTRACTOR SHALL COORDINATE ALL WORK WITH THE VARIOUS UTILITIES TO PROTECT AND MAINTAIN THE EXISTING UTILITY SERVICES DURING PAINTING.
4. THE CONTAINMENT SYSTEM SHALL BE DESIGNED BY THE CONTRACTOR AND REVIEWED BY THE ENGINEER IN ACCORDANCE WITH THE SPECIAL PROVISION "CLASS 1 CONTAINMENT AND COLLECTION OF SURFACE PREPARATION DEBRIS (SITE NO. 3)." CLASS 1 CONTAINMENT SHALL BE PROVIDED TO COLLECT AND CONTAIN DEBRIS RESULTING FROM THE REMOVAL OF LOCATIONS IN THE PREPARATION OF STEEL STRUCTURES FOR PAINTING.
5. IF THE CONTRACTOR CHOOSES TO ABRASIVE BLAST CLEAN THE BEAMS PRIOR TO STRUCTURAL STEEL REPAIRS, THEY SHOULD ONLY BE PRIMER PAINTED. THIS WILL ALLOW FOR STRUCTURAL REPAIRS TO BE COVERED IN ONE APPLICATION OF TOP COAT ALONG WITH THE BEAMS.

HATCHED PATTERN DENOTES PAINTING LIMITS FOR DIAPHRAGMS TO BE PAID FOR UNDER ITEM "ABRASIVE BLAST CLEANING AND FIELD PAINTING OF STRUCTURE (SITE NO. 3)."

REFERENCES:

1. SEE DWG. NOS. S-56 AND S-57 FOR PAINTING LIMITS AND MEMBERS SIZES.
2. SEE DWG. NO. S-59 FOR BEARING DIMENSIONS AND PAINTING LIMITS.

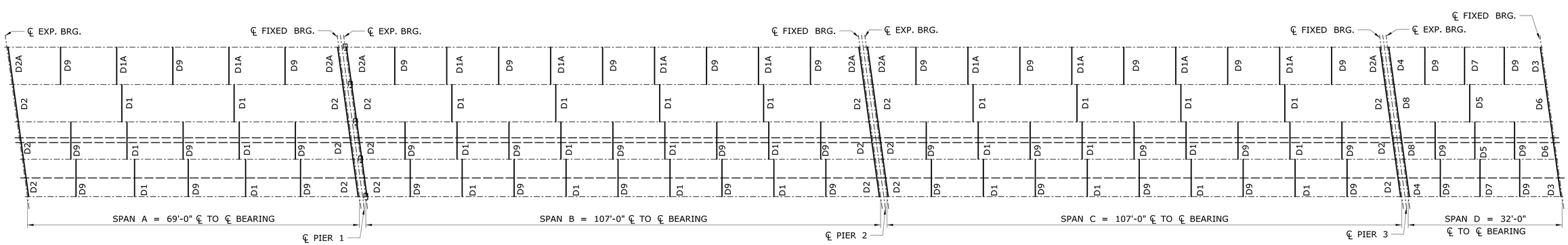

FRAMING PLAN

SCALE: 3/32" = 1'-0"

REV.	DATE	REVISION DESCRIPTION	SHEET NO.

THE INFORMATION, INCLUDING ESTIMATED QUANTITIES OF WORK, SHOWN ON THESE SHEETS IS BASED ON LIMITED INVESTIGATIONS BY THE STATE AND IS IN NO WAY WARRANTED TO INDICATE THE CONDITIONS OF ACTUAL QUANTITIES OF WORK WHICH WILL BE REQUIRED.

Plotted Date: 8/8/2017

DESIGNER/DRAFTER: D.C./S.C.
CHECKED BY: J.H.M. II
SCALE AS NOTED

STATE OF CONNECTICUT
DEPARTMENT OF TRANSPORTATION

Filename: ...\SB_MSH_3_174_402_BR_01161_S_58_BEAM-PAINT-3.dgn

SIGNATURE/BLOCK:
Close, Jensen and Miller, P.C.
1137 Silas Deane Highway
Wethersfield, CT 06109

PROJECT TITLE:
BEAM END REPAIR AND BEARING REPLACEMENT IN DISTRICT 4

TOWN: **MIDDLEBURY**

DRAWING TITLE: **PAINTING DETAILS - 3 BRIDGE NO. 01161**

PROJECT NO. **174-402**
DRAWING NO. **S-58**
SHEET NO. **03.58**

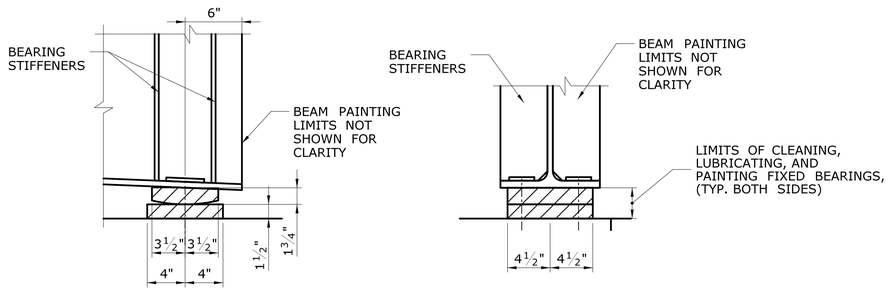

FIXED BEARING DETAIL

(SPAN D)

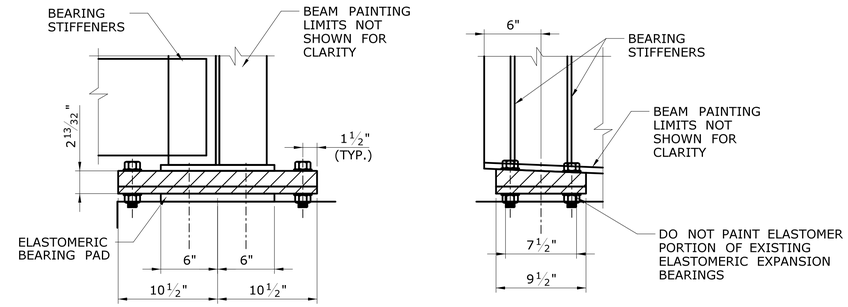

EXPANSION BEARING DETAIL

(SPAN D)

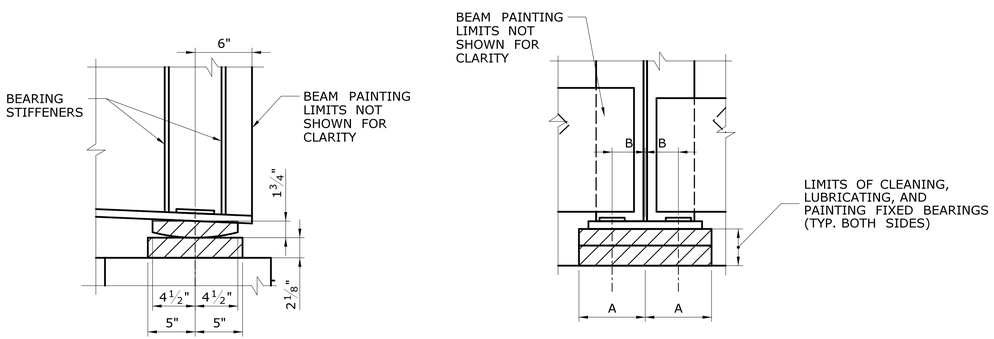

FIXED BEARING DETAIL

(SPANS A, B, & C)

SPAN	A	B
A	7"	3½"
B & C	9"	4"

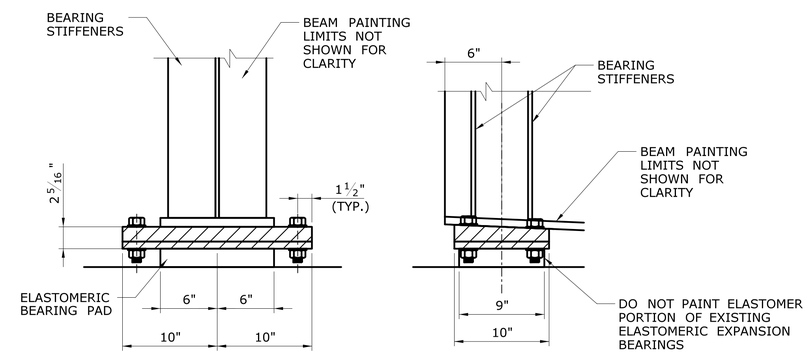

EXPANSION BEARING DETAIL

(SPAN A)

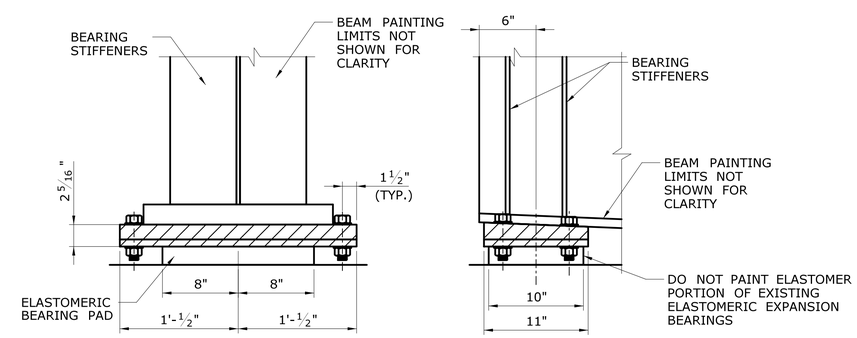

EXPANSION BEARING DETAIL

(SPANS B & C)

REFERENCES:

1. SEE DWG. NOS. S-56 TO S-58 FOR PAINTING LIMITS AND MEMBERS SIZES.
2. SEE DWG. NO. S-58 FOR DIAPHRAGM AND STIFFENER DIMENSIONS AND PAINTING LIMITS.

PAINTING NOTES:

PAINTING NOTES SEE SHEET S-58.

HATCHED PATTERN DENOTES PAINTING LIMITS FOR BEARINGS TO BE PAID FOR UNDER THE ITEM "ABRASIVE BLAST CLEANING AND FIELD PAINTING OF STRUCTURE (SITE NO. 3)."

REV.	DATE	REVISION DESCRIPTION	SHEET NO.

THE INFORMATION, INCLUDING ESTIMATED QUANTITIES OF WORK, SHOWN ON THESE SHEETS IS BASED ON LIMITED INVESTIGATIONS BY THE STATE AND IS IN NO WAY WARRANTED TO INDICATE THE CONDITIONS OF ACTUAL QUANTITIES OF WORK WHICH WILL BE REQUIRED.

Plotted Date: 8/8/2017

DESIGNER/DRAFTER: D.C./S.C.
CHECKED BY: J.H.M. II
SCALE: 1½" = 1'-0"

STATE OF CONNECTICUT
DEPARTMENT OF TRANSPORTATION

Filename: ...\SB_MSH_3_174_402_BR_01161_S_59_BEAM-PAINT-4.dgn

SIGNATURE/BLOCK:
Close, Jensen and Miller, P.C.
1137 Silas Deane Highway
Wethersfield, CT 06109

PROJECT TITLE:
BEAM END REPAIR AND BEARING REPLACEMENT IN DISTRICT 4

TOWN: MIDDLEBURY

DRAWING TITLE: PAINTING DETAILS - 4 BRIDGE NO. 01161

PROJECT NO. 174-402
DRAWING NO. S-59
SHEET NO. 03.59