SUBSET 04 - STRUCTURE
INDEX OF DRAWINGS

DRAWING NUMBER	DRAWING TITLE	DRAWING NUMBER	DRAWING TITLE
IN-02	INDEX OF DRAWINGS		
S-01	GENERAL PLAN		
S-02	PROFILE & QUANTITIES SHEET		
S-03	TEMPORARY BRIDGE PLAN		
S-04	STAGE CONSTRUCTION		
S-05	STRUCTURAL BORING LOGS		
S-06	PILE PLAN		
S-07	PLAN & ELEVATION ABUTMENT NO. 1		
S-08	PLAN & ELEVATION ABUTMENT NO. 2		
S-09	ABUTMENT DETAILS		
S-10	PLAN & ELEVATION WINGWALLS		
S-11	FRAMING PLAN		
S-12	PRESTRESSED DECK UNIT DETAILS - 1		
S-13	PRESTRESSED DECK UNIT DETAILS - 2		
S-14	PRESTRESSED DECK UNIT DETAILS - 3		
S-15	DECK PLAN & SECTION		
S-16	APPROACH SLAB DETAILS		
S-17	PARAPET DETAILS		
S-18	TEMPORARY BRIDGE ABUTMENT DETAILS		

DESIGNED BY:
STV INCORPORATED
185 PLAINS ROAD, SUITE 208E
MILFORD, CT 06461

STV Incorporated
185 Plains Road
Suite 208E
Milford, CT 06461

James Sherwonit
2017.07.13
13:08:10-04'00'

REV.	DATE	REVISION DESCRIPTION	SHEET NO.

THE INFORMATION, INCLUDING ESTIMATED QUANTITIES OF WORK, SHOWN ON THESE SHEETS IS BASED ON LIMITED INVESTIGATIONS BY THE STATE AND IS IN NO WAY WARRANTED TO INDICATE THE CONDITIONS OF ACTUAL QUANTITIES OF WORK WHICH WILL BE REQUIRED.

Plotted Date: 6/22/2017

DESIGNER/DRAFTER: MN
CHECKED BY: ZB
SCALE AS NOTED

STATE OF CONNECTICUT
DEPARTMENT OF TRANSPORTATION

Filename: ...\Subset 04 Index.dgn

SIGNATURE/BLOCK:
STV Incorporated
185 Plains Road
Suite 208E
Milford, CT 06461

PROJECT TITLE:
REPLACEMENT OF BRIDGE NO. 01127 - FOXON ROAD (ROUTE 80) OVER FARM RIVER

TOWN: NORTH BRANFORD

DRAWING TITLE: INDEX OF DRAWINGS

PROJECT NO. 98-101
DRAWING NO. IN-02
SHEET NO. 04.01

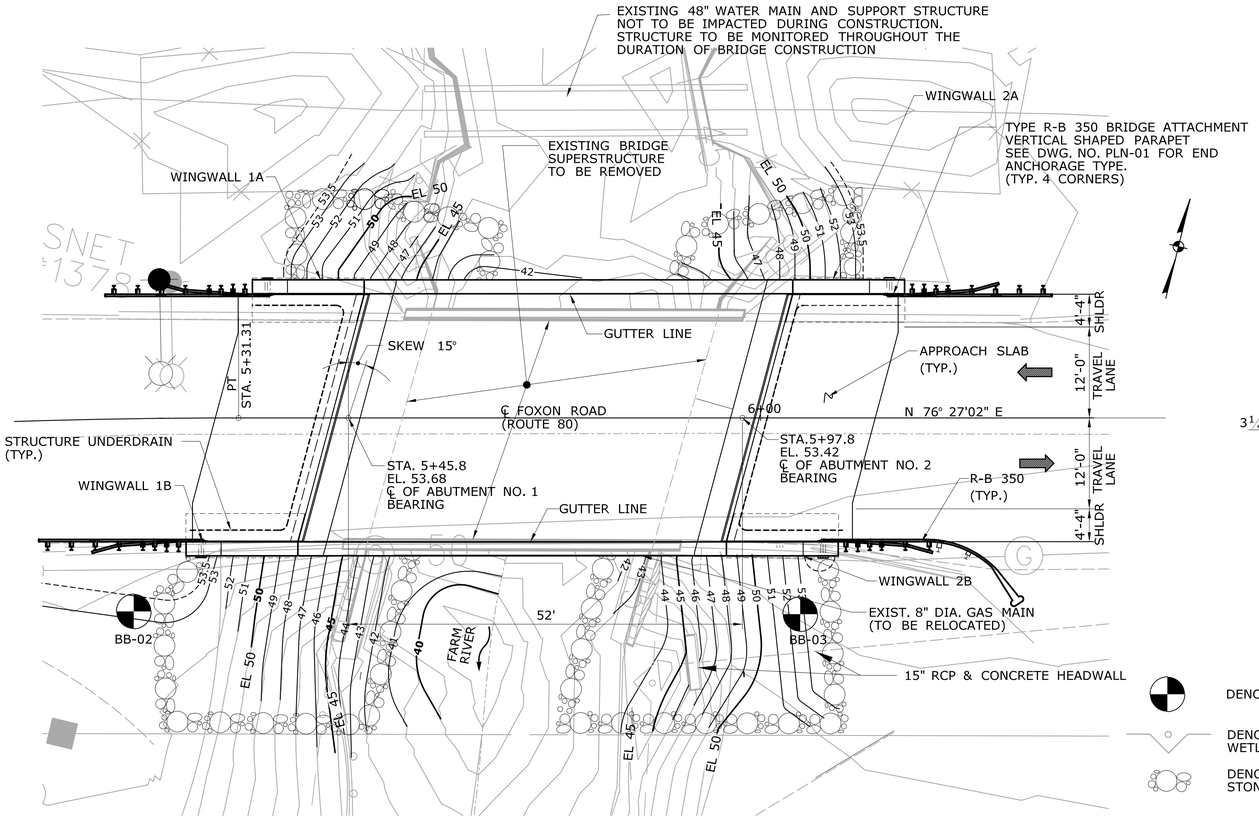

PLAN

SCALE: 1"=10'

DENOTES SOIL BORING

DENOTES FEDERAL WETLANDS

DENOTES STANDARD STONE RIPRAP LIMITS

NOTE:

1. FOR 100 YEAR FLOOD ELEVATION, SEE SITE PLAN.
2. FOR STRUCTURAL BORING LOGS, SEE DWG. NO. S-05.

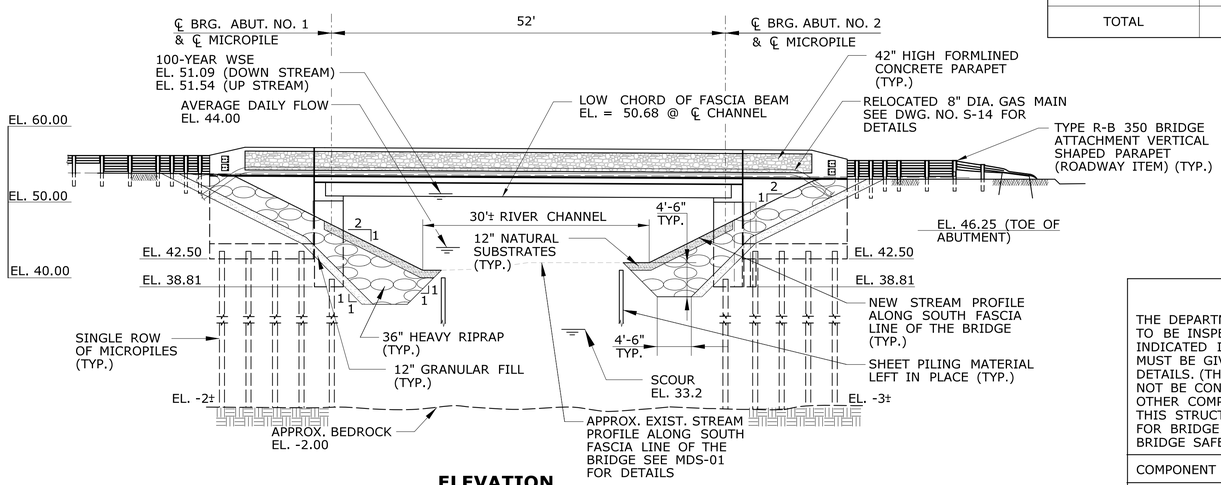

ELEVATION

SCALE: 1"=10'

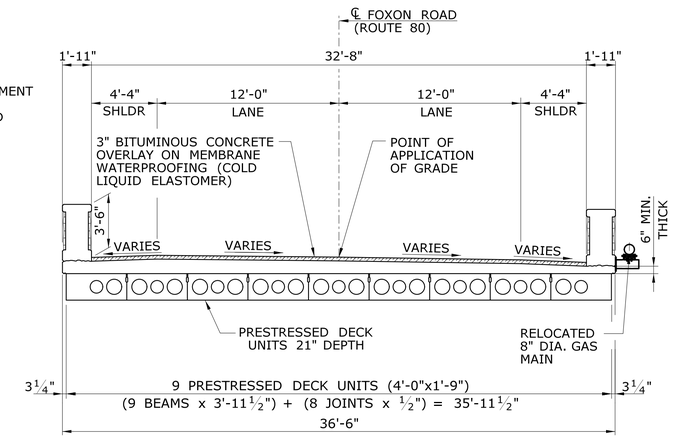

PROPOSED BRIDGE TYPICAL SECTION

SCALE: 1"=5'

MAX. SHIPPING DATA				
PRESTRESSED DECK UNITS	LENGTH	HEIGHT	WIDTH	WEIGHT
AASHTO SIV-48 VOIDED SLAB BEAMS	53'-6"	1'-9"	4'-0"	39,200 #

HYDRAULIC DATA	
DRAINAGE AREA	13.9 SQ. MI.
DESIGN FREQUENCY	100 YEAR
DESIGN DISCHARGE	3000 CFS
AVERAGE DAILY FLOW ELEVATION	44.0 FT.
UPSTREAM DESIGN WATER SURFACE EL.	51.54 FT.
DOWNSTREAM DESIGN WATER SURFACE EL.	51.09 FT.
SCOUR DESIGN FREQUENCY	200 YEAR
SCOUR DESIGN FREQUENCY DISCHARGE	3215 CFS
WORST CASE SCOUR SUBSTRUCTURE UNIT	E ABUTMENT
MAXIMUM SCOUR ELEVATION	33.2 FT.
2-YEAR FREQUENCY DISCHARGE	800 CFS
TEMPORARY DESIGN DISCHARGE FREQUENCY	10-YEARS
TEMPORARY DESIGN FREQUENCY DISCHARGE	1700 CFS
TEMPORARY WATER SURFACE EL. UPSTREAM	49.6 FT.
TEMPORARY WATER SURFACE EL. DOWNSTREAM	48.9 FT.

CONCRETE DISTRIBUTION		
SUPERSTRUCTURE	CY	160
SUBSTRUCTURE	CY	90
TOTAL	CY	250

GENERAL NOTES CONTINUED:

BRIDGE IDENTIFICATION PLACARDS: THE CONTRACTOR SHALL PROVIDE AND INSTALL NEW BRIDGE IDENTIFICATION SIGNS AT THE LEADING END OF THE BRIDGE ON THE TRAFFIC SIDE. THE SIGNS SHALL BE FABRICATED WITH 40 GAUGE ALUMINIUM SHEET METAL. THE SIGNS SHALL BE 4" X 12" WITH 3" REFLECTIVE BLOCK LETTERS ON GREEN REFLECTIVE SHEETING. EACH SIGN SHALL READ: (BRIDGE NO. 01127). ALL COSTS ASSOCIATED WITH PROVIDING AND INSTALLING THE BRIDGE SIGNS SHALL BE COVERED UNDER THE ITEM 1208929 SIGN FACE - SHEET ALUMINIUM (TYPE IV REFLECTIVE SHEETING). THE FINAL LOCATION AND ATTACHMENT METHOD FOR THE SIGNS SHALL BE APPROVED BY THE ENGINEER PRIOR TO INSTALLATION.

CONCRETE SHIMS (FOR BEARING): THE COST OF FURNISHING AND INSTALLING SHALL BE INCLUDED IN THE COST OF ITEM "PRESTRESSED DECK UNITS (4'-0"x1'-9")".

NOTICE TO BRIDGE INSPECTORS

THE DEPARTMENTS BRIDGE SAFETY PROCEDURES REQUIRE THIS BRIDGE TO BE INSPECTED FOR, BUT NOT LIMITED TO ALL APPROPRIATE COMPONENTS INDICATED IN THE GOVERNING MANUALS FOR BRIDGE INSPECTION. ATTENTION MUST BE GIVEN TO INSPECTING THE FOLLOWING SPECIAL COMPONENTS AND DETAILS. (THE LISTING FOR COMPONENTS FOR SPECIFIC ATTENTION SHALL NOT BE CONSTRUEND TO REDUCE THE IMPORTANCE OF INSPECTION OF ANY OTHER COMPONENT OF THE STRUCTURE.) THE FREQUENCY OF INSPECTION OF THIS STRUCTURE SHALL BE IN ACCORDANCE WITH THE GOVERNING MANUALS FOR BRIDGE INSPECTION, UNLESS OTHERWISE DIRECTED BY THE MANAGER OF BRIDGE SAFETY AND EVALUATION.

COMPONENT OR DETAIL	DRAWING NO. REFERENCE
FOLLOW NORMAL INSPECTION PROCEDURE	

GENERAL NOTES:

SPECIFICATIONS: CONNECTICUT DEPARTMENT OF TRANSPORTATION FORM 817 (2016), SUPPLEMENTAL SPECIFICATION DATED JANUARY 2017 AND SPECIAL PROVISIONS.

DESIGN SPECIFICATIONS: AASHTO LRFD BRIDGE DESIGN SPECIFICATIONS (SEVENTH EDITION,2014) WITH THE INTERIM SPECIFICATIONS UP TO & INCLUDING (2015) AND PCI BRIDGE DESIGN MANUAL (THIRD EDITION,2014), AS SUPPLEMENTED BY THE CONNECTICUT DEPARTMENT OF TRANSPORTATION BRIDGE DESIGN MANUAL (2003) WITH UPDATES UP TO AND INCLUDING (FEBRUARY 2011).

ALLOWABLE DESIGN STRESSES:
CONCRETE
CLASS "A" CONCRETE f'c = 3,000 PSI
CLASS "F" CONCRETE f'c = 4,000 PSI
REINFORCEMENT (ASTM A615 GRADE 60) fy = 60,000 PSI

THE SPECIFIED CONCRETE STRENGTH USED IN DESIGN, f'c OF THE CONCRETE COMPONENTS IS NOTED ABOVE. THE MINIMUM COMPRESSIVE STRENGTH OF THE CONCRETE IN THE CONSTRUCTED COMPONENTS SHALL CONFORM TO THE REQUIREMENTS "SECTION 6.01 CONCRETE FOR STRUCTURES".

LIVE LOAD: HL-93

FUTURE PAVING ALLOWANCE: NONE

BITUMINOUS CONCRETE OVERLAY: THE BITUMINOUS CONCRETE OVERLAY SHALL BE PLACED IN LIFTS TO A MINIMUM THICKNESS OF 3" OVER A MEMBRANE WATERPROOFING (COLD LIQUID ELASTOMERIC) AS SHOWN ON THE PLANS. THE BITUMINOUS OVERLAY SHALL BE COMPRISED OF A 1" BOTTOM COURSE OF HMA S0.25 TRAFFIC LEVEL 3 AND A 2" TOP COURSE OF HMA S0.50 TRAFFIC LEVEL 3 WHICH ALL WORK SHALL BE PAID UNDER "HMA S0.25" AND "HMA S0.5", RESPECTIVELY, IN ACCORDANCE WITH THE SPECIAL PROVISIONS.

DIMENSIONS: WHEN DECIMAL DIMENSIONS ARE GIVEN TO LESS THAN THREE DECIMAL PLACES, THE OMITTED DIGITS SHALL BE ASSUMED TO BE ZEROS.

EXISTING DIMENSIONS: DIMENSIONS OF THE EXISTING STRUCTURE SHOWN ON THESE PLANS ARE FOR GENERAL REFERENCE ONLY. THEY HAVE BEEN TAKEN FROM FIELD SURVEY AND ARE NOT GUARANTEED. THE CONTRACTOR SHALL TAKE ALL FIELD MEASUREMENTS NECESSARY TO ASSURE PROPER FIT OF THE FINISHED WORK AND SHALL ASSUME FULL RESPONSIBILITY FOR THEIR ACCURACY. WHEN SHOP DRAWINGS BASED ON FIELD MEASUREMENTS ARE SUBMITTED FOR APPROVAL, THE FIELD MEASUREMENTS SHALL ALSO BE SUBMITTED FOR REFERENCE BY THE REVIEWER.

CONSTRUCTION STAGING: ROUTE 80 TRAFFIC WILL BE MAINTAINED DURING CONSTRUCTION ON A TEMPORARY STRUCTURE AND ALL PROPOSED BRIDGE CONSTRUCTION WILL BE PERFORMED IN A SINGLE STAGE.

UTILITY IMPACTS:
8" DIAMETER GAS (SOUTHERN CONNECTICUT GAS)
AERIAL:
ELECTRICAL DISTRIBUTION (UNITED ILLUMINATING CO.)
COMMUNICATION (LIGHTOWER NETWORKS, LLC)
COMMUNICATION (FRONTIER COMMUNICATIONS)
CABLE TV (COMCAST OF CONNECTICUT, LLC)

THE CONTRACTOR SHALL TAKE SPECIAL PRECAUTIONS NOT TO ADVERSELY IMPACT THE 48" WATER MAIN AND ITS FOUNDATION STRUCTURE DURING CONSTRUCTION ACTIVITIES. THE CONTRACTOR SHALL SCHEDULE ITS OPERATIONS IN SUCH A MANNER AS TO MINIMIZE INTERFERENCE WITH THE OPERATIONS OF THE SOUTH CENTRAL CONNECTICUT REGIONAL WATER AUTHORITY AND IS RESPONSIBLE TO COORDINATING ITS CONSTRUCTION ACTIVITIES WITH THE SAME. ALL WORK ASSOCIATED WITH THE MONITORING OF THE STRUCTURAL INTEGRITY OF THE 48-INCH WATER MAIN SHALL BE UNDER "SETTLEMENT MONITORING PROGRAM".

CONCRETE NOTES

CLASS "A" CONCRETE: CLASS "A" CONCRETE SHALL BE USED FOR THE ENTIRE SUBSTRUCTURE AND THE PARAPETS OF U-TYPE WINGS.

CLASS "F" CONCRETE: CLASS "F" CONCRETE SHALL BE USED FOR BRIDGE DECKS, PARAPETS AND APPROACH SLABS.

EXPOSED EDGES: EXPOSED EDGES OF CONCRETE SHALL BE BEVELED 1"X1" UNLESS DIMENSIONED OTHERWISE.

CONCRETE COVER: ALL REINFORCEMENT SHALL HAVE TWO INCHES COVER UNLESS DIMENSIONED OTHERWISE.

REINFORCEMENT: ALL REINFORCEMENT SHALL BE ASTM A615 GRADE 60.

EPOXY COATED REINFORCING BARS:
ALL REINFORCEMENT, EXCEPT THE STRANDS IN THE ADJACENT PRECAST CONCRETE DECK UNITS SHALL BE EPOXY COATED AND INCLUDED IN THE PAY ITEM FOR "PRESTRESSED DECK UNITS (4'-0"x1'-9")". ALL REINFORCEMENT IN THE CONCRETE DECK SLABS AND PARAPETS SHALL BE EPOXY COATED AND SHALL BE INCLUDED IN THE PAY ITEM FOR "DEFORMED STEEL BARS (EPOXY COATED)."

PREFORMED EXPANSION JOINT FILLER: THE COST OF FURNISHING AND INSTALLING PREFORMED EXPANSION JOINT FILLER SHALL BE INCLUDED IN THE COST OF THE ITEM "CLASS "A" CONCRETE".

CONSTRUCTION JOINTS: CONSTRUCTION JOINTS, OTHER THAN THOSE SHOWN ON THE PLANS, WILL NOT BE PERMITTED WITHOUT THE PRIOR APPROVAL OF THE ENGINEER.

REV.	DATE	REVISION DESCRIPTION	SHEET NO.

THE INFORMATION, INCLUDING ESTIMATED QUANTITIES OF WORK, SHOWN ON THESE SHEETS IS BASED ON LIMITED INVESTIGATIONS BY THE STATE AND IS IN NO WAY WARRANTED TO INDICATE THE CONDITIONS OF ACTUAL QUANTITIES OF WORK WHICH WILL BE REQUIRED.

Plotted Date: 7/11/2017

DESIGNER/DRAFTER: PKS/JV/MN
CHECKED BY: MO/RJE
SCALE AS NOTED

STATE OF CONNECTICUT
DEPARTMENT OF TRANSPORTATION

Filename: ...\SB_MSH_BR01127_098_0101_GPN_S-01.dgn

SIGNATURE/BLOCK:
STATE OF CONNECTICUT #12175 JORGE E. SHEFFOUNI LICENSED PROFESSIONAL ENGINEER
STV Incorporated
185 Plains Road
Suite 208E
Milford, CT 06461

PROJECT TITLE:
REPLACEMENT OF BRIDGE NO. 01127 - FOXON ROAD (ROUTE 80) OVER FARM RIVER

TOWN: NORTH BRANFORD

DRAWING TITLE: GENERAL PLAN

PROJECT NO. 98-101
DRAWING NO. S-01
SHEET NO. 04.02

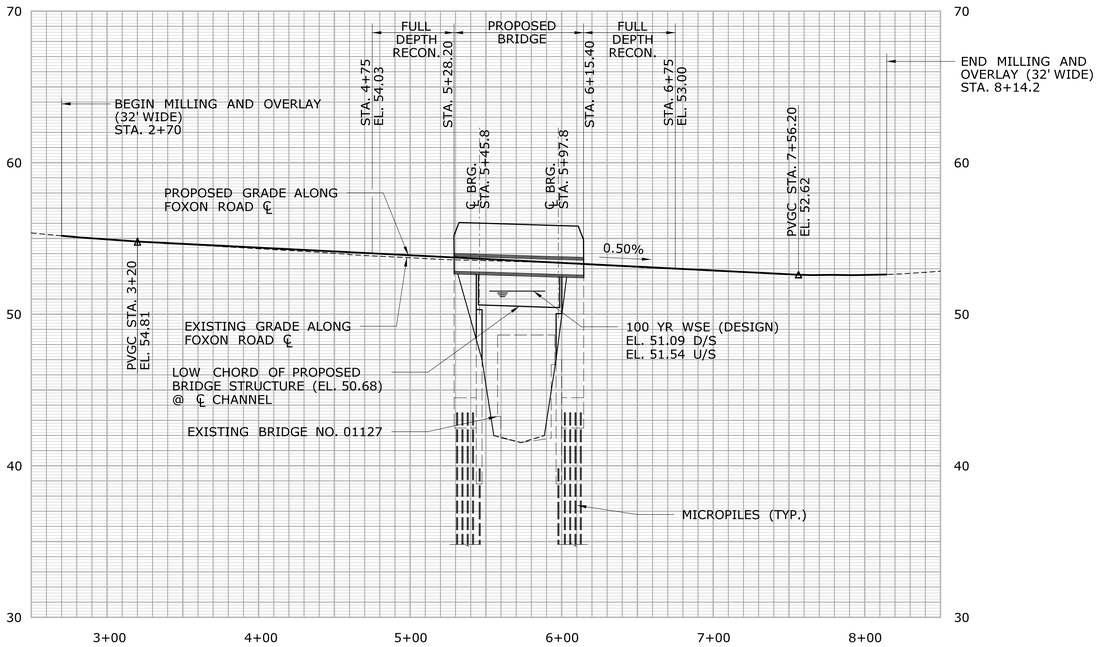

PROFILE OF FOXON ROAD (ROUTE 80)

HORIZONTAL SCALE : 1" = 50'
VERTICAL SCALE : 1" = 5'

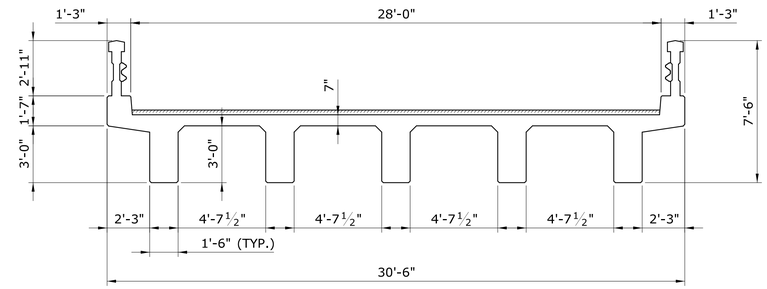

EXISTING BRIDGE CROSS SECTION

SCALE: ¼" = 1'-0"

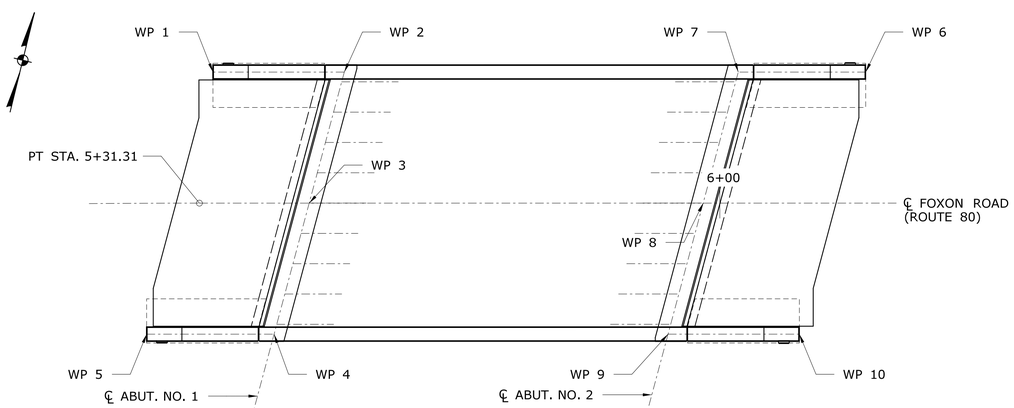

LAYOUT PLAN

SCALE: 1" = 10'

WORKING POINT COORDINATES		
WP #	NORTHING	EASTING
WP 1	680265.118	981926.163
WP 2	680269.178	981943.015
WP 3	680251.280	981942.561
WP 4	680233.382	981942.108
WP 5	680229.442	981925.756
WP 6	680285.297	982009.920
WP 7	680281.357	981993.567
WP 8	680263.463	981993.114
WP 9	680245.562	981992.661
WP 10	680249.622	982009.513

TABLE OF QUANTITIES		
ITEM	UNIT	QUANTITY
STRUCTURE EXCAVATION- EARTH (EXCLUDING COFFERDAM AND DEWATERING)	CY	590
COFFERDAM AND DEWATERING	LF	197
PERVIOUS STRUCTURE BACKFILL	CY	285
HMA S0.5	TON	37
HMA S0.25	TON	19
TEMPORARY BRIDGE	LS	1
REMOVAL OF SUPERSTRUCTURE (SITE NO. 1)	LS	1
PRESTRESSED DECK UNITS (4'-0"x1'-9")	LF	482
CLASS "A" CONCRETE	CY	180
CLASS "F" CONCRETE	CY	160
CONCRETE FORM LINERS	SF	770
DEFORMED STEEL BARS	LB	13,965
DEFORMED STEEL BARS - EPOXY COATED	LB	17,850
MICROPILES	EA	54
VERIFICATION TEST FOR MICROPILES	EA	1
PROOF TEST FOR MICROPILES	EA	2
MICROPILE LENGTH ADJUSTMENT	LF	108
MEMBRANE WATERPROOFING (COLD LIQUID ELASTOMER)	SY	318
REMOVAL OF EXISTING MASONRY	CY	265
6" STRUCTURE UNDERDRAIN	LF	135
DAMPPROOFING	SY	150
1" PREFORMED EXPANSION JOINT FILLER FOR BRIDGES	SF	142
TEMPORARY SHEET PILING (SPECIAL)	SF	1,010
SHEET PILING MATERIAL LEFT IN PLACE	SF	4,630
SAWING AND SEALING JOINTS	LF	66
SETTLEMENT MONITORING PROGRAM	LS	1
INSTALL 8-INCH GAS MAIN ON BRIDGE	LS	1

REV.	DATE	REVISION DESCRIPTION	SHEET NO.

THE INFORMATION, INCLUDING ESTIMATED QUANTITIES OF WORK, SHOWN ON THESE SHEETS IS BASED ON LIMITED INVESTIGATIONS BY THE STATE AND IS IN NO WAY WARRANTED TO INDICATE THE CONDITIONS OF ACTUAL QUANTITIES OF WORK WHICH WILL BE REQUIRED.

Plotted Date: 7/12/2017

DESIGNER/DRAFTER: **PKS/JV**
CHECKED BY: **MO/RJE**
SCALE AS NOTED

STATE OF CONNECTICUT
DEPARTMENT OF TRANSPORTATION

Filename: ...\SB_MSH_BR01127_098_0101_EST_S-02.dgn

SIGNATURE/BLOCK:

STV Incorporated
185 Plains Road
Suite 208E
Milford, CT 06461

PROJECT TITLE:
REPLACEMENT OF BRIDGE NO. 01127 - FOXON ROAD (ROUTE 80) OVER FARM RIVER

TOWN: **NORTH BRANFORD**

DRAWING TITLE: **PROFILE & QUANTITIES SHEET**

PROJECT NO. **98-101**
DRAWING NO. **S-02**
SHEET NO. **04.03**

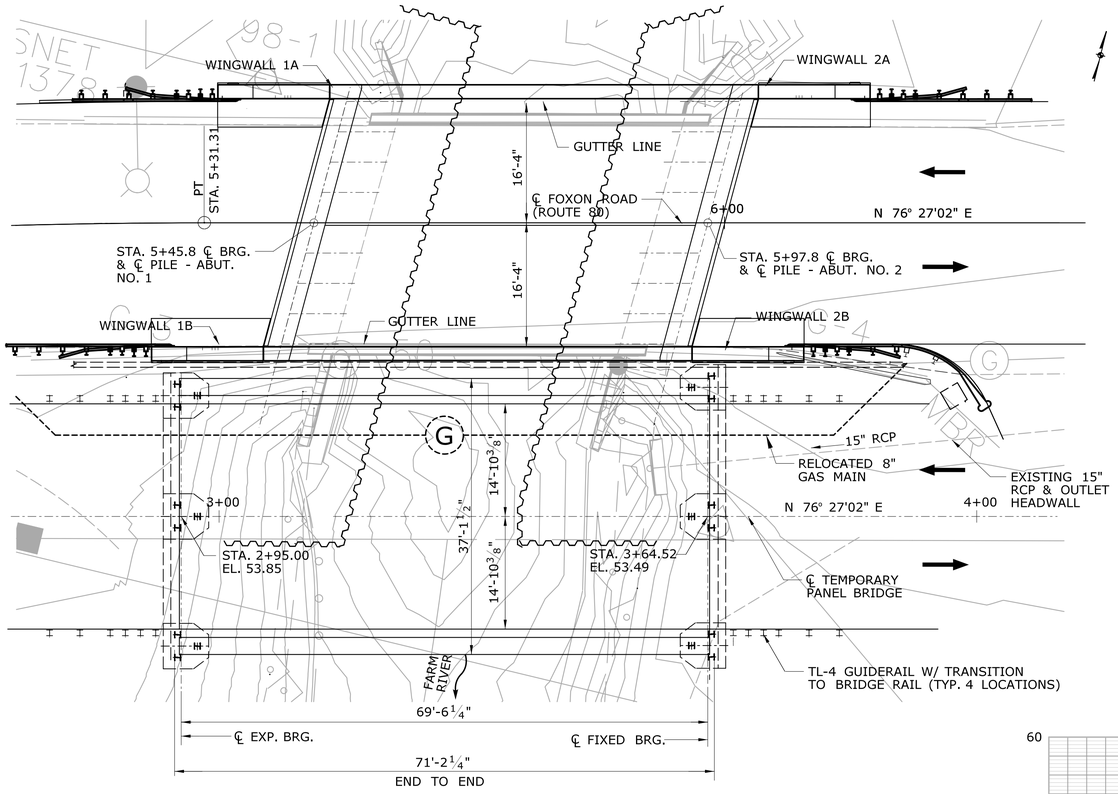

PLAN

SCALE: 1"=10'

NOTE: HANDLING OF DISCHARGE FROM 15' RCP SHALL BE PAID FOR UNDER "COFFERDAM AND DEWATERING".

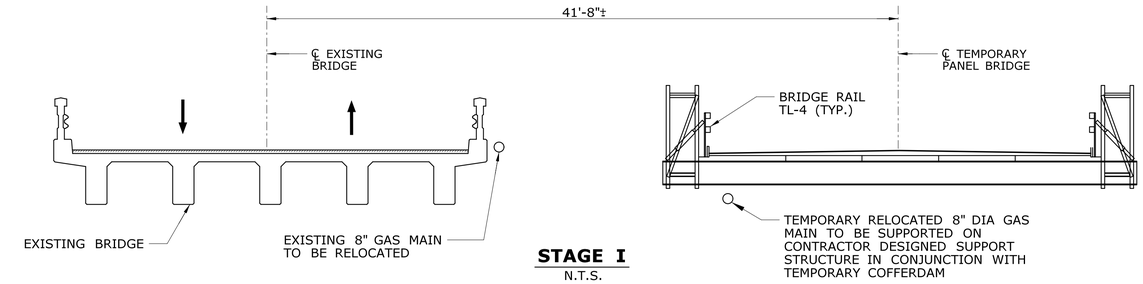

STAGE I

N.T.S.

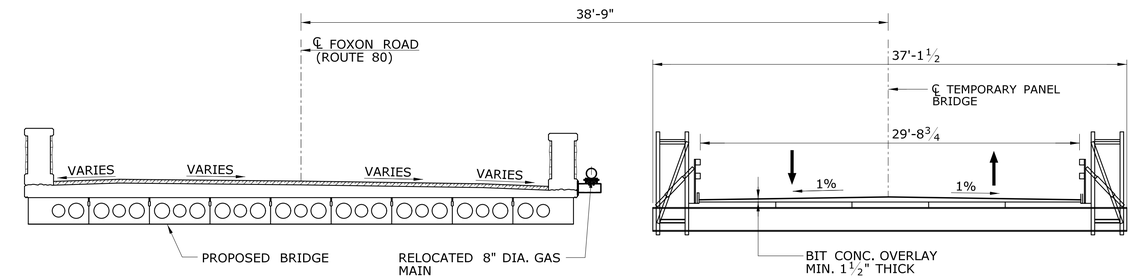

STAGE II

N.T.S.

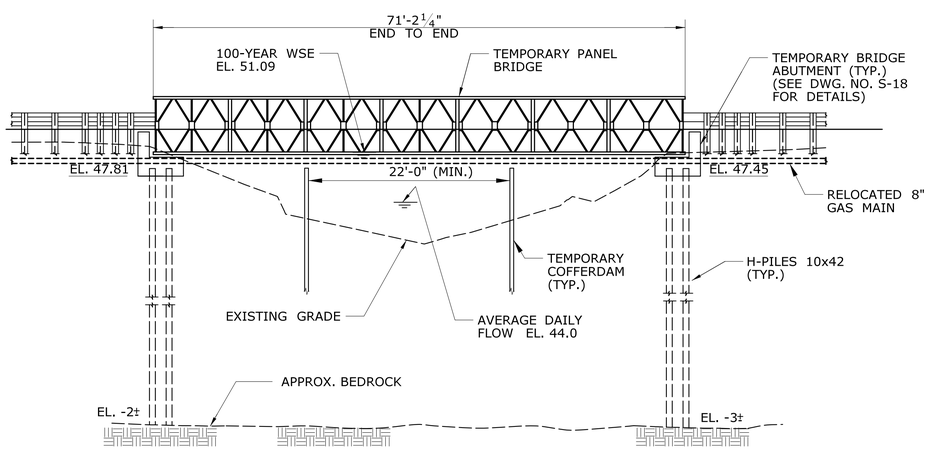

ELEVATION

SCALE: 1"=10'

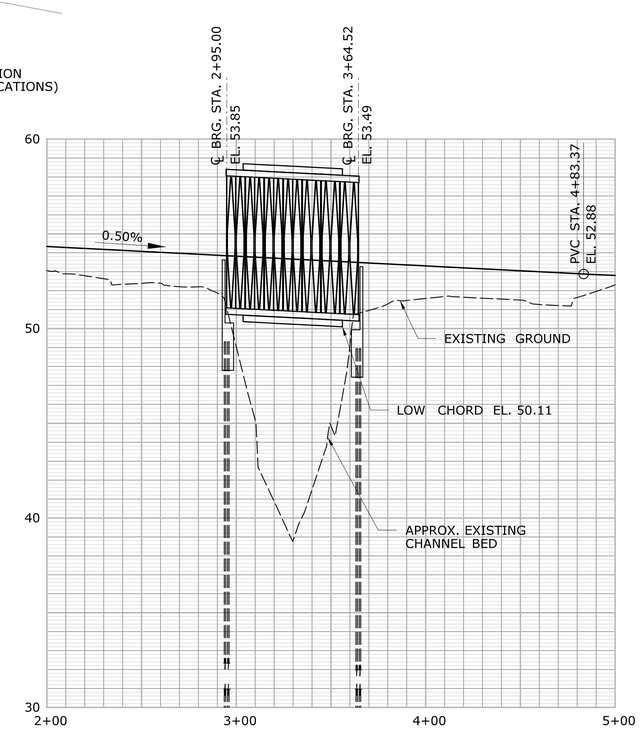

TEMPORARY BRIDGE PROFILE

HORIZONTAL SCALE: 1" = 80'
VERTICAL SCALE: 1" = 8'

GENERAL NOTES - TEMPORARY BRIDGE

DESIGN SPECIFICATIONS: AASHTO LRFD BRIDGE DESIGN SPECIFICATIONS SEVENTH EDITION AND AASHTO LRFD BRIDGE CONSTRUCTION SPECIFICATION THIRD EDITION

LIVE LOAD: HL-93 AT 75%

DEAD LOAD: 30 POUNDS PER SQ. FT. (ASPHALT OVERLAY) AND SELF-WEIGHT OF STRUCTURE

FINISH: ALL MAJOR COMPONENTS GALVANIZED TO AASHTO M111.

TEMPORARY BRIDGE: DETAILS ARE BASED ON MODULAR BRIDGE COMPONENTS MANUFACTURED BY ACROW BRIDGE, PARSIPPANY, N.J.

FOR DETAILS OF TEMPORARY ROADWAY & BRIDGE ALIGNMENT, SEE HWY SHEETS.

REV.	DATE	REVISION DESCRIPTION	SHEET NO.

THE INFORMATION, INCLUDING ESTIMATED QUANTITIES OF WORK, SHOWN ON THESE SHEETS IS BASED ON LIMITED INVESTIGATIONS BY THE STATE AND IS IN NO WAY WARRANTED TO INDICATE THE CONDITIONS OF ACTUAL QUANTITIES OF WORK WHICH WILL BE REQUIRED.

Plotted Date: 6/22/2017

DESIGNER/DRAFTER: PKS/JV
CHECKED BY: MO/RJE
SCALE AS NOTED

STATE OF CONNECTICUT
DEPARTMENT OF TRANSPORTATION

Filename: ...\SB_MSH_BR01127_098_0101_TBP_S-03.dgn

SIGNATURE/BLOCK:

STV Incorporated
185 Plains Road
Suite 208E
Milford, CT 06461

PROJECT TITLE:
REPLACEMENT OF BRIDGE NO. 01127 - FOXON ROAD (ROUTE 80) OVER FARM RIVER

TOWN: NORTH BRANFORD

DRAWING TITLE: TEMPORARY BRIDGE PLAN

PROJECT NO. 98-101
DRAWING NO. S-03
SHEET NO. 04.04

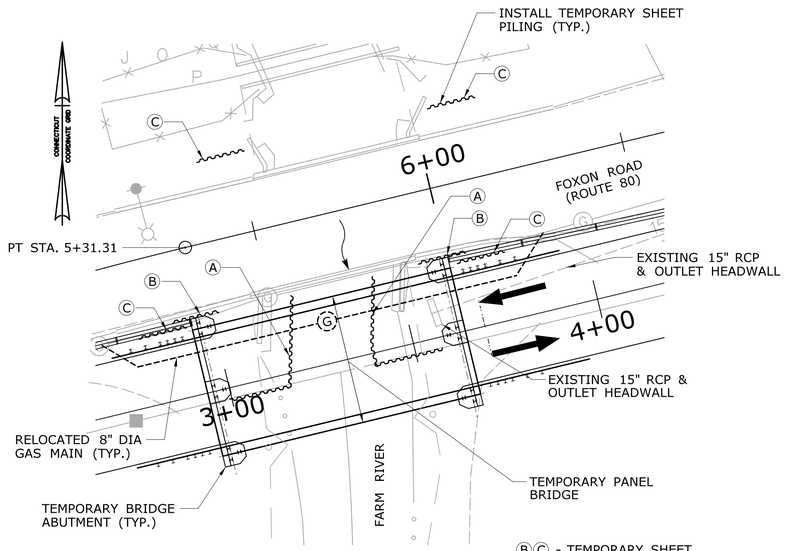

Ⓑ Ⓒ - TEMPORARY SHEET PILING

Ⓐ - TEMPORARY COFFERDAM (SEE NOTE 2)

STAGE 1

SCALE: 1" = 20'

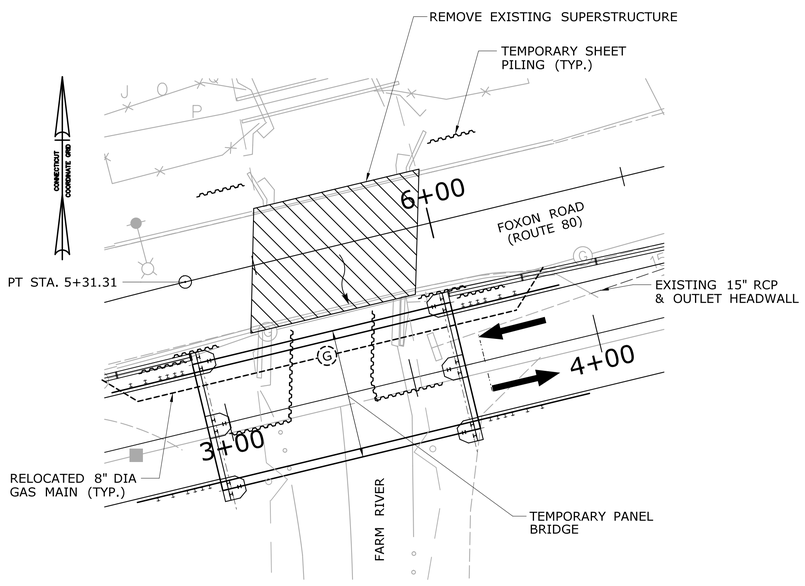

STAGE 2 - PHASE I

SCALE: 1" = 20'

SUGGESTED SEQUENCE OF OPERATIONS

STAGE 1

1. INSTALL TEMPORARY COFFERDAM Ⓐ . INSTALL CONTRACTOR DESIGNED GAS MAIN SUPPORT STRUCTURE IN CONJUNCTION WITH TEMPORARY COFFERDAM Ⓐ . INSTALL H-PILES FOR TEMPORARY BRIDGE WITH PDA TESTING. (SEE NOTE 1)
2. INSTALL TEMPORARY SHEET PILING Ⓑ & Ⓒ . CONSTRUCT TEMPORARY BRIDGE ABUTMENTS ON THE SOUTH SIDE OF EXISTING BRIDGE.
3. ERECT TEMPORARY BRIDGE.
4. INSTALL METAL BEAM RAIL AND APPROACH ROADWAY.

STAGE 2 - PHASE I

1. SHIFT TRAFFIC ONTO TEMPORARY BRIDGE.
2. REMOVE EXISTING SUPERSTRUCTURE.
3. VERIFICATION TEST MICROPILE.

STAGE 2 - PHASE II

1. INSTALL TEMPORARY COFFERDAM Ⓓ WHICH ATTACHES TO COFFERDAM Ⓐ TO FORM A TEMPORARY COFFERDAM SYSTEM.
2. REMOVE EXISTING BRIDGE SUBSTRUCTURE IN ITS ENTIRETY.
3. INSTALL AND PROOF TEST MICROPILES.
4. CONSTRUCT PROPOSED ABUTMENTS AND WINGWALLS.
5. REMOVE TEMPORARY SHEET PILING Ⓒ .

STAGE 2 - PHASE III (NOT SHOWN)

1. INSTALL RIPRAP REVETMENT IN EMBANKMENT AREAS.
2. ERECT PROPOSED SUPERSTRUCTURE.
3. RELOCATE GAS MAIN TO NEW BRIDGE (SEE NOTE 3).

STAGE 3

1. SHIFT TRAFFIC ONTO NEW BRIDGE.
2. CUT OFF TEMPORARY BRIDGE H-PILES 1'-0" BELOW FINISHED GRADE. REMOVE TEMPORARY BRIDGE SUPERSTRUCTURE AND SUBSTRUCTURE. REMOVE TEMPORARY SHEET PILING Ⓑ .
3. REMOVE THE PORTION OF THE TEMPORARY COFFERDAM SYSTEM Ⓐ & Ⓓ WHICH IS SHOWN TO BE REMOVED, ACCORDING TO STAGE 2 - PHASE II - ELEVATION. (SEE NOTE 2)
4. INSTALL RIPRAP REVETMENT IN REMAINING EMBANKMENT AREAS NOT INSTALLED IN PREVIOUS CONSTRUCTION PHASES.

NOTES:

1. SOUTHERN CONNECTICUT GAS CO. (SCG) TO RELOCATE AND INSTALL 8" GAS ON CONTRACTOR DESIGNED TEMPORARY SUPPORT STRUCTURE, SEE SPECIAL PROVISIONS.
2. PORTION OF TEMPORARY COFFERDAM Ⓐ & Ⓓ TO BE LEFT IN PLACE SHALL BE PAID FOR UNDER ITEM "SHEET PILING MATERIAL LEFT IN PLACE" AND THE REMAINING SHALL BE PAID FOR UNDER ITEM "COFFERDAM AND DEWATERING". THIS SHEETING SHALL BE CUT OFF 1'-0" BELOW FINISHED GRADE.
3. SCG SHALL PROVIDE THE ROLLER CHAIRS ASSOCIATED WITH THE 8" GAS MAIN TEMPORARY AND RELOCATION. THE CONTRACTOR SHALL INSTALL AND FABRICATE THE SUPPORT BRACKETS ON THE OUTSIDE FACE OF THE SOUTH PARAPET OF THE NEW BRIDGE AS SHOWN ON THE PLANS. ALL OTHER INSTALLATIONS AND WORK NECESSARY FOR RELOCATING THE 8" GAS MAIN COMPLETE IN PLACE SHALL BE PERFORMED BY SCG'S OWN CREW OR BY A QUALIFIED CONTRACTOR.
4. ALL COFFERDAM AND TEMPORARY SHEET PILING SHALL BE INSTALLED BY NON-VIBRATORY/NON-IMPACT METHODS DUE TO THE CLOSE NATURE AND SENSITIVITY OF THE 48" DIA WATER MAIN.

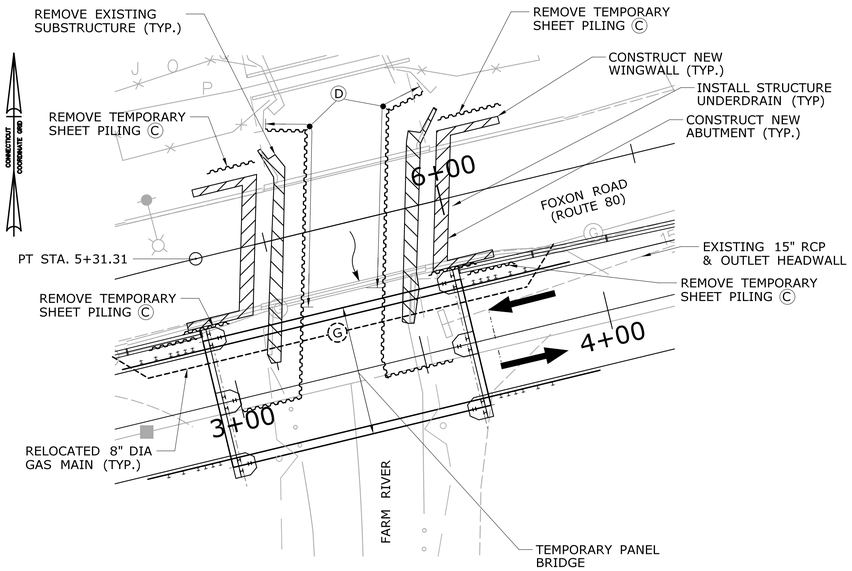

STAGE 2 - PHASE II

SCALE: 1" = 20'

Ⓓ - TEMPORARY COFFERDAM (SEE NOTE 2)

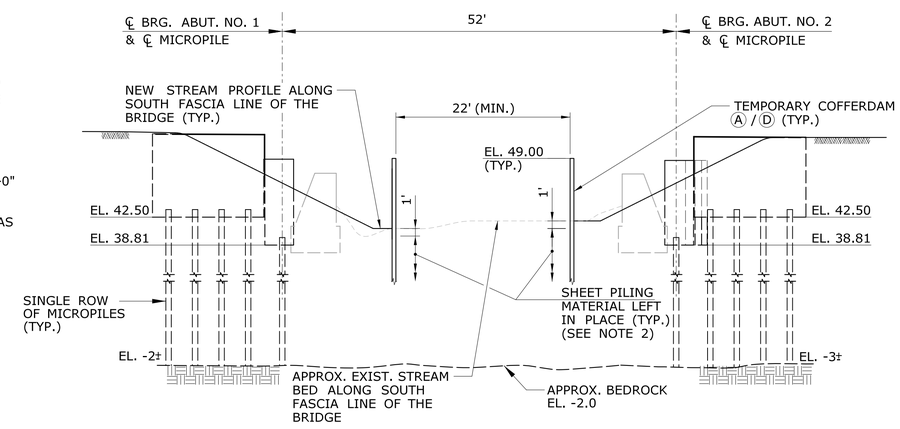

STAGE 2 - PHASE II - ELEVATION

SCALE: 1" = 10'

REV.	DATE	REVISION DESCRIPTION	SHEET NO.

THE INFORMATION, INCLUDING ESTIMATED QUANTITIES OF WORK, SHOWN ON THESE SHEETS IS BASED ON LIMITED INVESTIGATIONS BY THE STATE AND IS IN NO WAY WARRANTED TO INDICATE THE CONDITIONS OF ACTUAL QUANTITIES OF WORK WHICH WILL BE REQUIRED.

Plotted Date: 7/12/2017

DESIGNER/DRAFTER: JV

CHECKED BY: MO/RJE

SCALE AS NOTED

STATE OF CONNECTICUT
DEPARTMENT OF TRANSPORTATION

Filename: ...\SB_MSH_Br01127_098_0101_STG_S-04.dgn

SIGNATURE/BLOCK:

STV Incorporated
185 Plains Road
Suite 208E
Milford, CT 06461

PROJECT TITLE:

REPLACEMENT OF BRIDGE NO. 01127 - FOXON ROAD (ROUTE 80) OVER FARM RIVER

TOWN: **NORTH BRANFORD**

DRAWING TITLE: **STAGE CONSTRUCTION**

PROJECT NO. **98-101**

DRAWING NO. **S-04**

SHEET NO. **04.05**

Driller:	Orrin Cone	**Connecticut DOT Boring Report**	Hole No.: BB-02
Inspector:	Bob Smoko	Town: N. Branford, CT	Stat./Offset: Sta 5+17.1/25.3RT
Engineer:	STV Incorporated	Project No.: 98-101	Northing: 680219.99
Start Date:	06/30/14	Route No.: 80	Easting: 981920.96
Finish Date:	06/30/14	Bridge No.: 01127	Surface Elevation: 53 ft
Project Description:	Replacement of RTE 80 Bridge 01127 Over Farm River		
Casing Size/Type:	HSA, 4"	Sampler Type/Size: SPT/24"	Core Barrel Type: NX
Hammer Wt.: 300lb	Fall: 30 in.	Hammer Wt: 140lb	Fall: 30 in.
Groundwater Observations:	See notes		

Depth (ft)	Sample Type/No.	Blows on Sampler per 6 inches	Pen. (in.)	Rec. (in.)	RQD %	Casing Blows per 6"	Generalized Strata Description	Material Description and Notes	Well Construction	Elevation (ft)
0							Fill	Hand excavate 0' to 5'; 3 bulk samples collected, Brown f SAND, little c Gravel, trace Silt		50
5	S-1	5 1 1 2	24	16				Brown, moist, f-m SAND, trace m Gravel, little (-) Silt, pieces of roots, grass		45
10	S-2	2 1 2 7	24	9			Sand and Silt	Brown, moist, f-c SAND, little Silt, wood pieces		40
15	S-3	8 7 7 8	24	0				No Recovery		35
20	S-4	2 2 2 2	24	12				Brown, wet, SILT and f Sand		30
25	S-5	4 5 5 7	24	10			Sand, Silt, Gravel	Brown, wet, m-c SAND, some f*-c Gravel, trace Silt		25
30	S-6	6 6 5 3	24	8				Same as above		20
35	S-7	2 2 3 4	24	5				Same as above		15
40	S-8	8 7 10 12	24	3				Brown, moist, m GRAVEL, some c Sand, little Silt		10
45	S-9	4 5 7 9	24	7				Brown, wet, m-c* SAND, trace f*-m Gravel, trace Silt		5
50										

Sample type: S = Split Spoon C = Core UP = Undisturbed Piston V = Vane Shear Test
Proportions Used: Trace = 1-10%, Little = 10-20%, Some = 20-35%, And = 35-50%

Total Penetration in Earth: 55ft	Rock: 10ft	New England Boring Contractors; Mobile B-53 rig, Safety Hammer, HSA 5 to 7', Casing thereafter. Groundwater assumed at 9' based on moisture content of samples.	Sheet 1 of 2
No. of Soil Samples: 10	No. of Core Runs: 2		SM-001-M REV. 1/02

Driller:	Orrin Cone	**Connecticut DOT Boring Report**	Hole No.: BB-02
Inspector:	Bob Smoko	Town: N. Branford, CT	Stat./Offset: Sta 5+17.1/25.3RT
Engineer:	STV Incorporated	Project No.: 98-101	Northing: 680219.99
Start Date:	06/30/14	Route No.: 80	Easting: 981920.96
Finish Date:	06/30/14	Bridge No.: 01127	Surface Elevation: 53 ft
Project Description:	Replacement of RTE 80 Bridge 01127 Over Farm River		
Casing Size/Type:	HSA, 4"	Sampler Type/Size: SPT/24"	Core Barrel Type: NX
Hammer Wt.: 300lb	Fall: 30 in.	Hammer Wt: 140lb	Fall: 30 in.
Groundwater Observations:	See notes		

Depth (ft)	Sample Type/No.	Blows on Sampler per 6 inches	Pen. (in.)	Rec. (in.)	RQD %	Casing Blows per 6"	Generalized Strata Description	Material Description and Notes	Well Construction	Elevation (ft)
50	S-10	8 13 16 14	24	11				Brown, wet, c SAND and f-m Gravel, trace Silt, c Gravel in tip of spoon		0
55	NX-1	Core Rates: 2 min 53 sec; 1 min 7 sec; 2 min 57 sec; 6 min 38 sec	60	40	38		Sandstone	Slightly to moderately weathered, slightly to moderatley fractured, fine to coarse grained SANDSTONE, very close joints, variable mineral composition		-5
60	NX-2	4 min; 4 min; 4 min 57 sec; 5 min 25 sec; 6 min 19 sec; 4 min 34 sec	60	51	24		Sandstone	Same as above		-10
65								End of Boring at 65'		

Sample type: S = Split Spoon C = Core UP = Undisturbed Piston V = Vane Shear Test
Proportions Used: Trace = 1-10%, Little = 10-20%, Some = 20-35%, And = 35-50%

Total Penetration in Earth: 55ft	Rock: 10ft	New England Boring Contractors; Mobile B-53 rig, Safety Hammer, HSA 5 to 7', Casing thereafter. Groundwater assumed at 9' based on moisture content of samples.	Sheet 2 of 2
No. of Soil Samples: 10	No. of Core Runs: 2		SM-001-M REV. 1/02

Driller:	Orrin Cone	**Connecticut DOT Boring Report**	Hole No.: BB-03
Inspector:	Bob Smoko	Town: N. Branford, CT	Stat./Offset: Sta 6+05.4/25.7RT
Engineer:	STV Incorporated	Project No.: 98-101	Northing: 680240.26
Start Date:	07/01/14	Route No.: 80	Easting: 982006.56
Finish Date:	07/02/14	Bridge No.: 01127	Surface Elevation: 53 ft
Project Description:	Replacement of RTE 80 Bridge 01127 Over Farm River		
Casing Size/Type:	HSA, 4"	Sampler Type/Size: SPT/24"	Core Barrel Type: NX
Hammer Wt.: 300lb	Fall: 30 in.	Hammer Wt: 140lb	Fall: 30 in.
Groundwater Observations:	See notes		

Depth (ft)	Sample Type/No.	Blows on Sampler per 6 inches	Pen. (in.)	Rec. (in.)	RQD %	Casing Blows per 6"	Generalized Strata Description	Material Description and Notes	Well Construction	Elevation (ft)
0							Fill	Hand excavate 0' to 5'; 3 bulk samples collected, Brown f SAND, little c Gravel, roots, grass		50
5	S-1	2 3 7 7	24	9				Brown, dry, f-m SAND, little f Gravel, trace Silt, roots, topsoil odor		45
10	S-2	11 13 12 16	24	12			Sand, Silt, Gravel	Brown, moist, f-m SAND (top 6"), Brown m-c SAND, trace Silt (bottom 6")		40
15	S-3	4 3 4 4	24	0				No Recovery		35
20	S-4	8 11 6 11	24	12				Brown, wet, c SAND, little f-m Gravel, trace Silt		30
25	S-5	8 8 9 7	24	8				Brown, wet, c SAND, some f-c Gravel, little Silt		25
30	S-6	7 7 7 8	24	0				No Recovery		20
35	S-7	4 3 4 4	24	8				Brown, wet, m-c Sand and f-m Gravel, trace Silt		15
40	S-8	9 8 8 9	24	6				Brown/Grey, wet, f-c GRAVEL, some c Sand, little (-) Silt		10
45	S-9	11 30 50 68	24	11				Brown, moist, f-m SAND, little f-m Gravel, trace Silt		5
50										

Sample type: S = Split Spoon C = Core UP = Undisturbed Piston V = Vane Shear Test
Proportions Used: Trace = 1-10%, Little = 10-20%, Some = 20-35%, And = 35-50%

Total Penetration in Earth: 56ft	Rock: 10ft	New England Boring Contractors; Mobile B-53 rig, Safety Hammer, HSA 5 to 7', Casing thereafter. Groundwater assumed at 10' based on moisture content of samples.	Sheet 1 of 2
No. of Soil Samples: 11	No. of Core Runs: 2		SM-001-M REV. 1/02

Driller:	Orrin Cone	**Connecticut DOT Boring Report**	Hole No.: BB-03
Inspector:	Bob Smoko	Town: N. Branford, CT	Stat./Offset: Sta 6+05.4/25.7RT
Engineer:	STV Incorporated	Project No.: 98-101	Northing: 680240.26
Start Date:	07/01/14	Route No.: 80	Easting: 982006.56
Finish Date:	07/02/14	Bridge No.: 01127	Surface Elevation: 53 ft
Project Description:	Replacement of RTE 80 Bridge 01127 Over Farm River		
Casing Size/Type:	HSA, 4"	Sampler Type/Size: SPT/24"	Core Barrel Type: NX
Hammer Wt.: 300lb	Fall: 30 in.	Hammer Wt: 140lb	Fall: 30 in.
Groundwater Observations:	See notes		

Depth (ft)	Sample Type/No.	Blows on Sampler per 6 inches	Pen. (in.)	Rec. (in.)	RQD %	Casing Blows per 6"	Generalized Strata Description	Material Description and Notes	Well Construction	Elevation (ft)
50	S-10	24 22 64 61	24	14				Grey, wet, f-c Gravel and c Sand, trace Silt (Weathered Rock)		0
55	S-11	13 60/4 Core	10	4				Brown, wet, SILT and f Gravel (Weathered Rock)		-5
60	NX-3	Core Rates: 3min39Sec; 4min 10sec; 4min 12sec; 4min 10sec	60	45	53			Sound to slightly weathered, slightly fractured, fine to coarse grained SANDSTONE, close joints, variable mineral composition		-10
65	NX-4	2min 12sec; 3min 50sec; 2min 20sec; 3min 04sec; 1min 11sec; 2min 11sec	60	8	0			Same as above		-15
								End of Boring at 66'		

Sample type: S = Split Spoon C = Core UP = Undisturbed Piston V = Vane Shear Test
Proportions Used: Trace = 1-10%, Little = 10-20%, Some = 20-35%, And = 35-50%

Total Penetration in Earth: 56ft	Rock: 10ft	New England Boring Contractors; Mobile B-53 rig, Safety Hammer, HSA 5 to 7', Casing thereafter. Groundwater assumed at 10' based on moisture content of samples.	Sheet 2 of 2
No. of Soil Samples: 11	No. of Core Runs: 2		SM-001-M REV. 1/02

NOTE:

FOR STRUCTURAL BORING LOCATION, SEE PLAN ON DWG. NO. S-01.

REV.	DATE	REVISION DESCRIPTION	SHEET NO.

THE INFORMATION, INCLUDING ESTIMATED QUANTITIES OF WORK, SHOWN ON THESE SHEETS IS BASED ON LIMITED INVESTIGATIONS BY THE STATE AND IS IN NO WAY WARRANTED TO INDICATE THE CONDITIONS OF ACTUAL QUANTITIES OF WORK WHICH WILL BE REQUIRED.

Plotted Date: 6/22/2017

DESIGNER/DRAFTER: **PKS**

CHECKED BY: **MO/RJE**

STATE OF CONNECTICUT
DEPARTMENT OF TRANSPORTATION

Filename: ...\SB_MSH_Br01127_098_0101_BOR_S-05.dgn

SIGNATURE/BLOCK:

STV Incorporated
185 Plains Road
Suite 208E
Milford, CT 06461

PROJECT TITLE:

REPLACEMENT OF BRIDGE NO. 01127 - FOXON ROAD (ROUTE 80) OVER FARM RIVER

TOWN: **NORTH BRANFORD**

DRAWING TITLE: **STRUCTURAL BORING LOGS**

PROJECT NO. **98-101**

DRAWING NO. **S-05**

SHEET NO. **04.06**

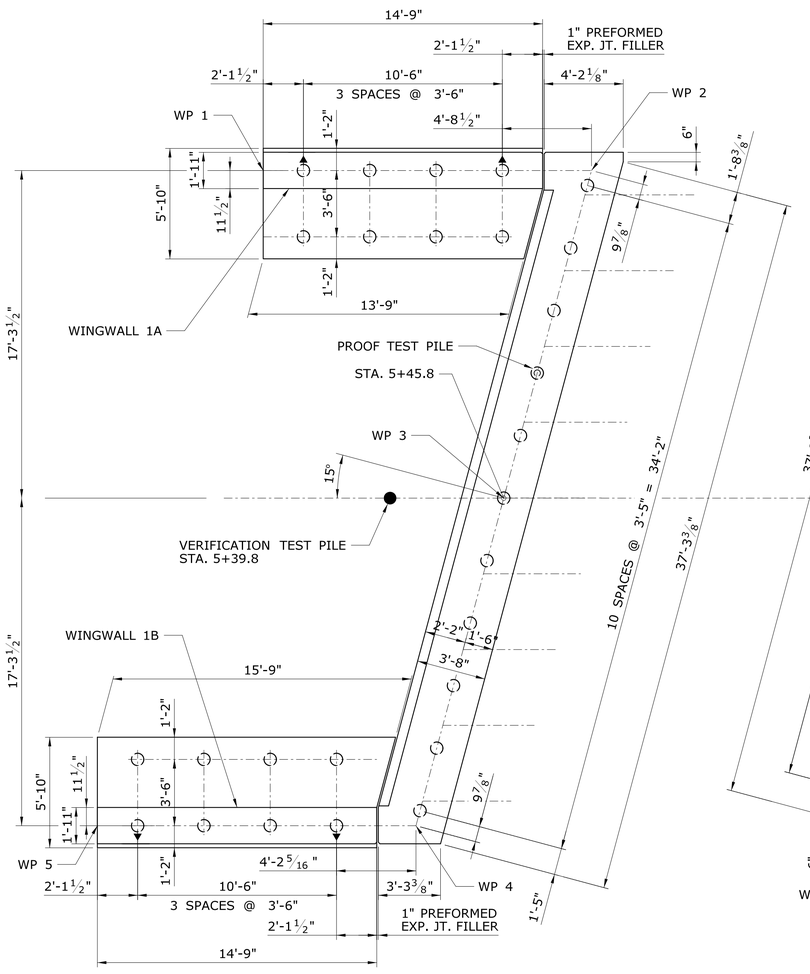

ABUTMENT NO. 1

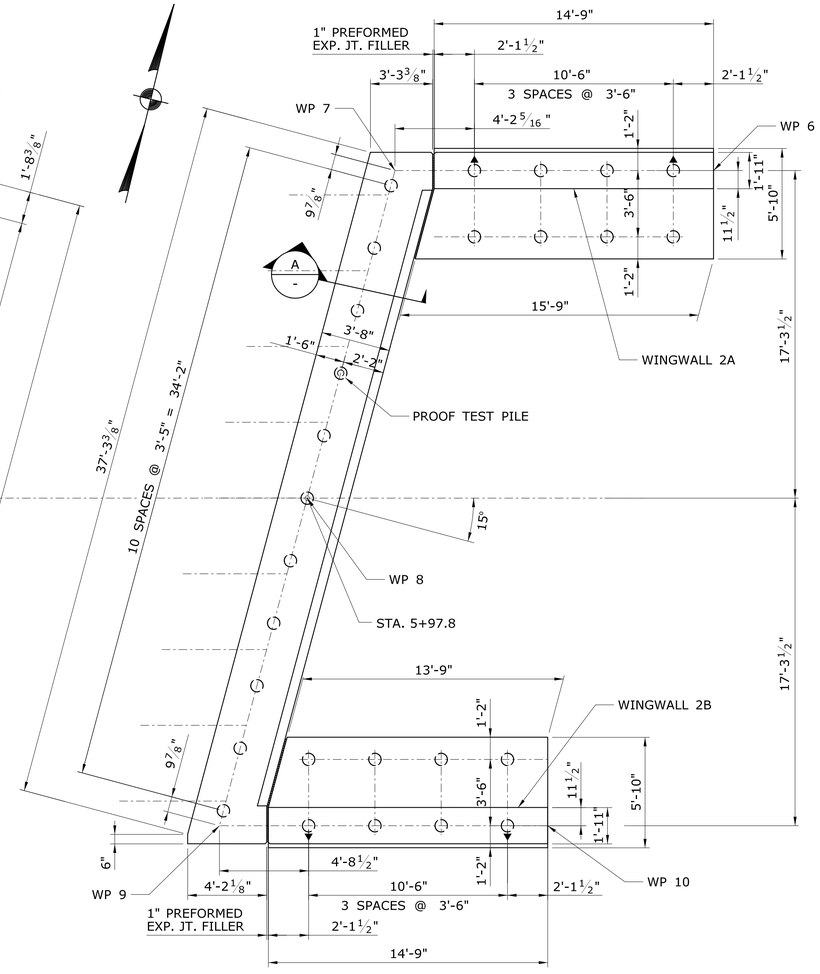

ABUTMENT NO. 2

PILE PLAN

SCALE: ¼" = 1'-0"

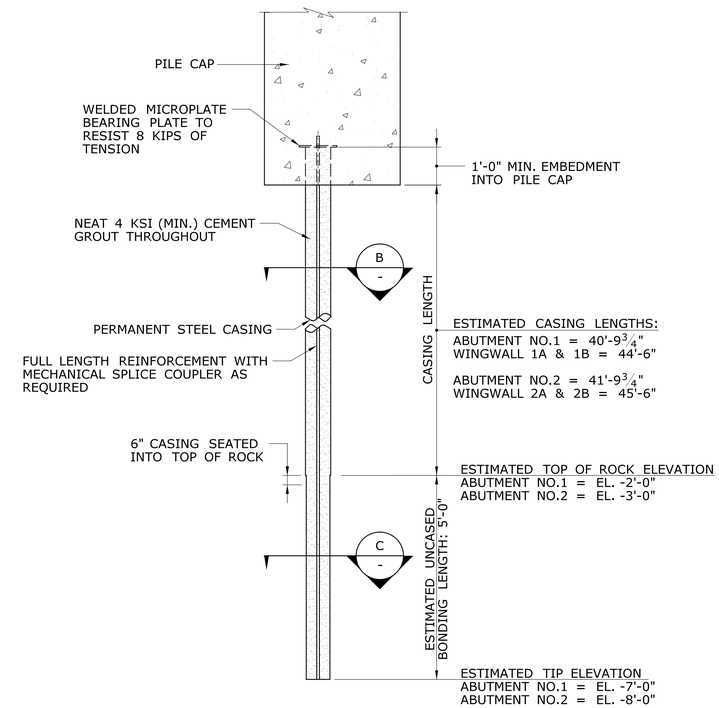

TYPICAL MICROPILE ELEVATION (A)

SCALE: ½" = 1'-0"

LEGEND:

- VERTICAL PILE
- BATTERED PILE (BATTER 1:4 IN DIRECTION OF ARROW)
- PROOF TEST PILE
- VERIFICATION TEST PILE

NOTES:

1. THE MICROPILE SHALL BE DESIGNED ACCORDING TO AASHTO LRFD BRIDGE DESIGN SPECIFICATIONS (SEVENTH EDITION, 2014), AS SUPPLEMENTED BY THE CONNECTICUT DEPARTMENT OF TRANSPORTATION BRIDGE DESIGN MANUAL (2003) WITH UPDATES UP TO AND INCLUDING (FEBRUARY 2011).
2. THE BOND ZONE SHALL BE COMPLETELY WITHIN THE ROCK.
3. NO SPLICING OF THE CENTRAL REINFORCING WILL BE ALLOWED WITHIN THE TOP 15 FT OF MICROPILE.
4. ON THE CENTRAL REINFORCEMENT THE MECHANICAL SPLICE COUPLERS SHALL DEVELOP 125% IN TENSION AND COMPRESSION OF THE SPECIFIED YIELD STRENGTH OF THE BAR BEING SPLICED.
5. CASING JOINTS ARE NOT PERMITTED IN THE UPPER 10 FT OF MICROPILE.

DESIGN LOADS	
MAXIMUM SERVICE LIMIT PILE LOAD	75 KIPS
MAXIMUM STRENGTH LIMIT PILE LOAD	105 KIPS
ULTIMATE PILE CAPACITY	225 KIPS

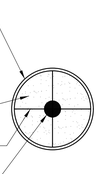

CASED PORTION OF MICROPILE (B)

SCALE: 1½" = 1'-0"

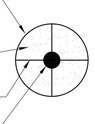

UNCASED PORTION OF MICROPILE (C)

SCALE: 1½" = 1'-0"

REV.	DATE	REVISION DESCRIPTION	SHEET NO.

THE INFORMATION, INCLUDING ESTIMATED QUANTITIES OF WORK, SHOWN ON THESE SHEETS IS BASED ON LIMITED INVESTIGATIONS BY THE STATE AND IS IN NO WAY WARRANTED TO INDICATE THE CONDITIONS OF ACTUAL QUANTITIES OF WORK WHICH WILL BE REQUIRED.

Plotted Date: 6/22/2017

DESIGNER/DRAFTER: PKS
CHECKED BY: MO/RJE
SCALE AS NOTED

STATE OF CONNECTICUT
DEPARTMENT OF TRANSPORTATION

Filename: ...\SB_MSH_Br01127_098_0101_PP_S-06.dgn

SIGNATURE/BLOCK:

STV Incorporated
185 Plains Road
Suite 208E
Milford, CT 06461

PROJECT TITLE:
REPLACEMENT OF BRIDGE NO. 01127 - FOXON ROAD (ROUTE 80) OVER FARM RIVER

TOWN: **NORTH BRANFORD**

DRAWING TITLE: **PILE PLAN**

PROJECT NO. 98-101
DRAWING NO. S-06
SHEET NO. 04.07

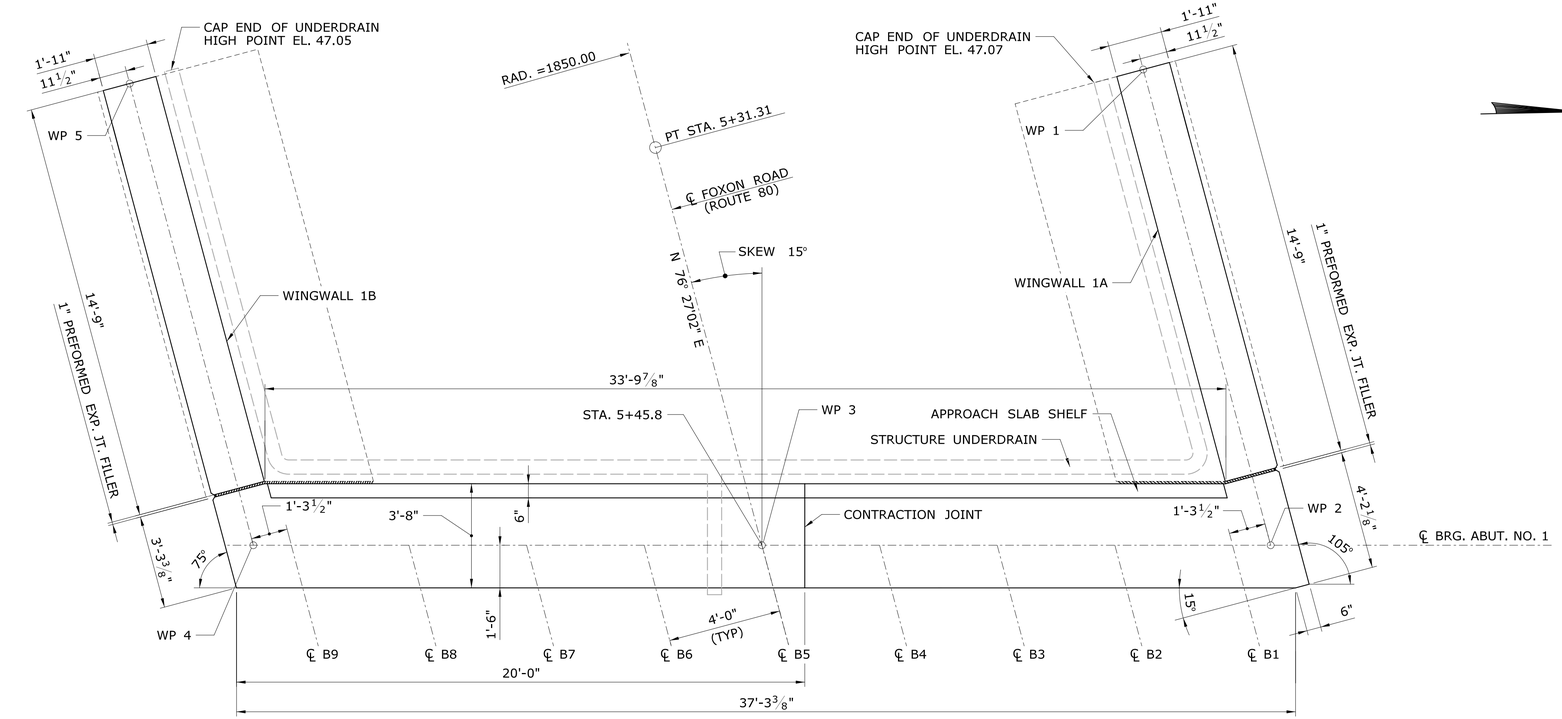

PLAN
SCALE: ⅜" = 1'-0"

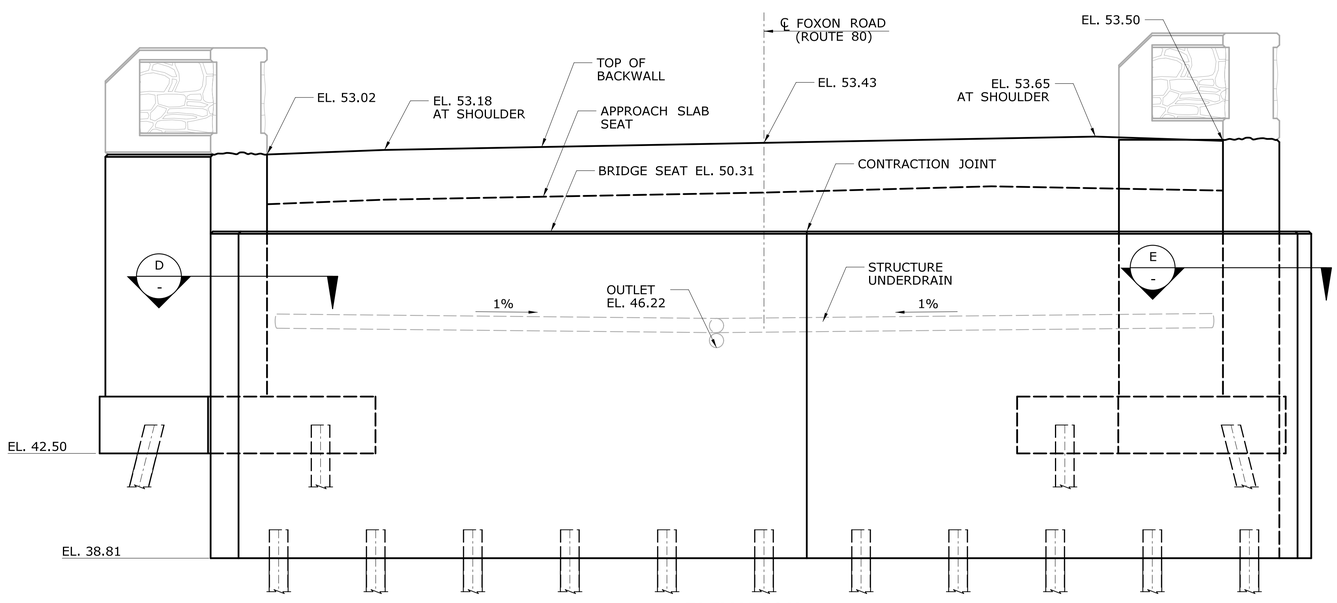

ELEVATION
SCALE: ⅜" = 1'-0"

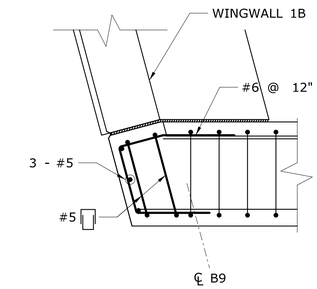

SECTION D - D / S-08

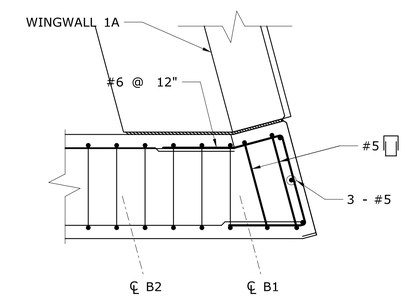

SECTION E - E / S-08

NOTES:

THE LAP SPLICE LENGTH FOR THE REINFORCEMENT SHALL BE NO LESS THAN THE FOLLOWING:

BAR SIZE	MINIMUM SPLICE LENGTH
#4 OR #5	2'-0"
#6	2'-6"
#7	3'-0"

LAP SPLICES SHALL BE STAGGERED SO THAT 50% OR LESS OF THE BARS ARE SPLICED AT THE SAME LOCATION.

REV.	DATE	REVISION DESCRIPTION	SHEET NO.

THE INFORMATION, INCLUDING ESTIMATED QUANTITIES OF WORK, SHOWN ON THESE SHEETS IS BASED ON LIMITED INVESTIGATIONS BY THE STATE AND IS IN NO WAY WARRANTED TO INDICATE THE CONDITIONS OF ACTUAL QUANTITIES OF WORK WHICH WILL BE REQUIRED.

Plotted Date: 6/22/2017

DESIGNER/DRAFTER: PKS/JV
CHECKED BY: MO/RJE
SCALE AS NOTED

STATE OF CONNECTICUT
DEPARTMENT OF TRANSPORTATION

Filename: ...\SB_MSH_Br01127_098_0101_ABT_S-07.dgn

SIGNATURE/BLOCK:
STV Incorporated
185 Plains Road
Suite 208E
Milford, CT 06461

PROJECT TITLE:
REPLACEMENT OF BRIDGE NO. 01127 - FOXON ROAD (ROUTE 80) OVER FARM RIVER

TOWN: NORTH BRANFORD

DRAWING TITLE:
PLAN & ELEVATION
ABUTMENT NO. 1

PROJECT NO. 98-101
DRAWING NO. S-07
SHEET NO. 04.08

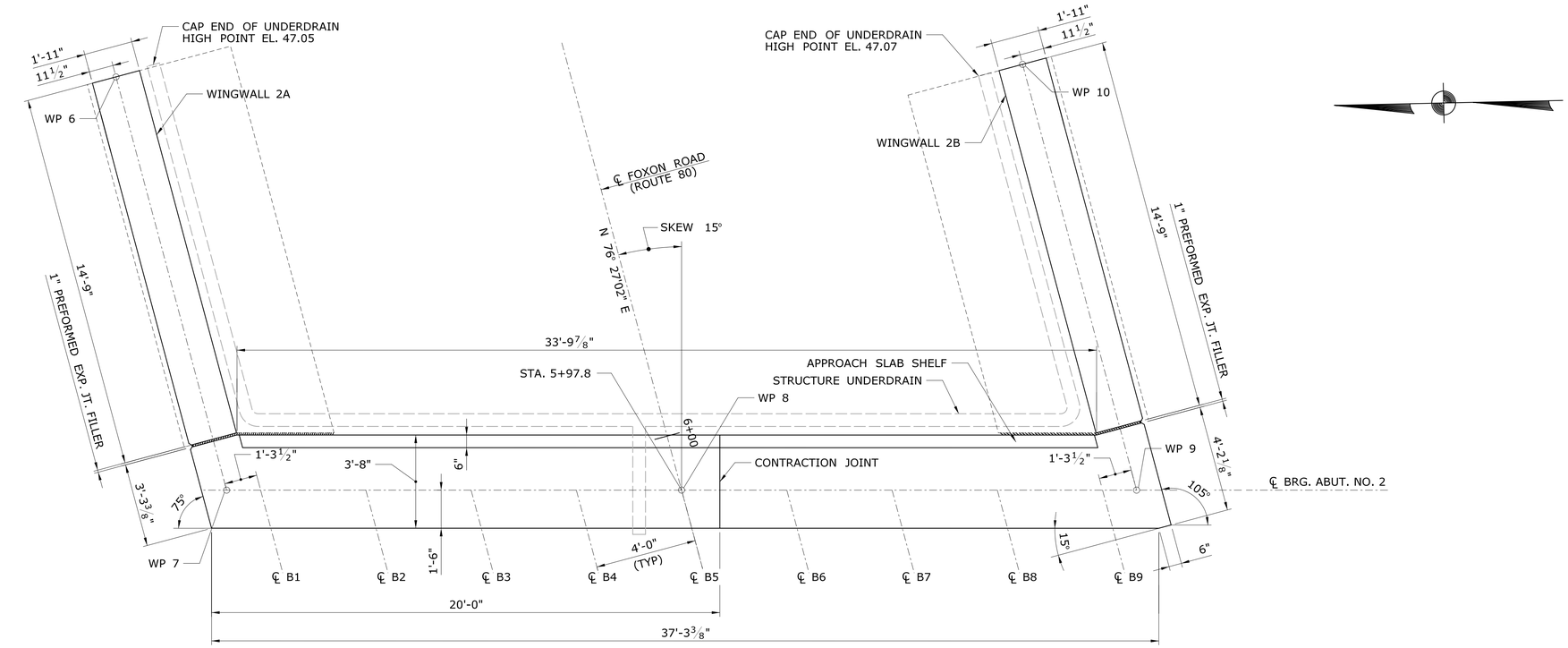

PLAN
SCALE: ⅜" = 1'-0"

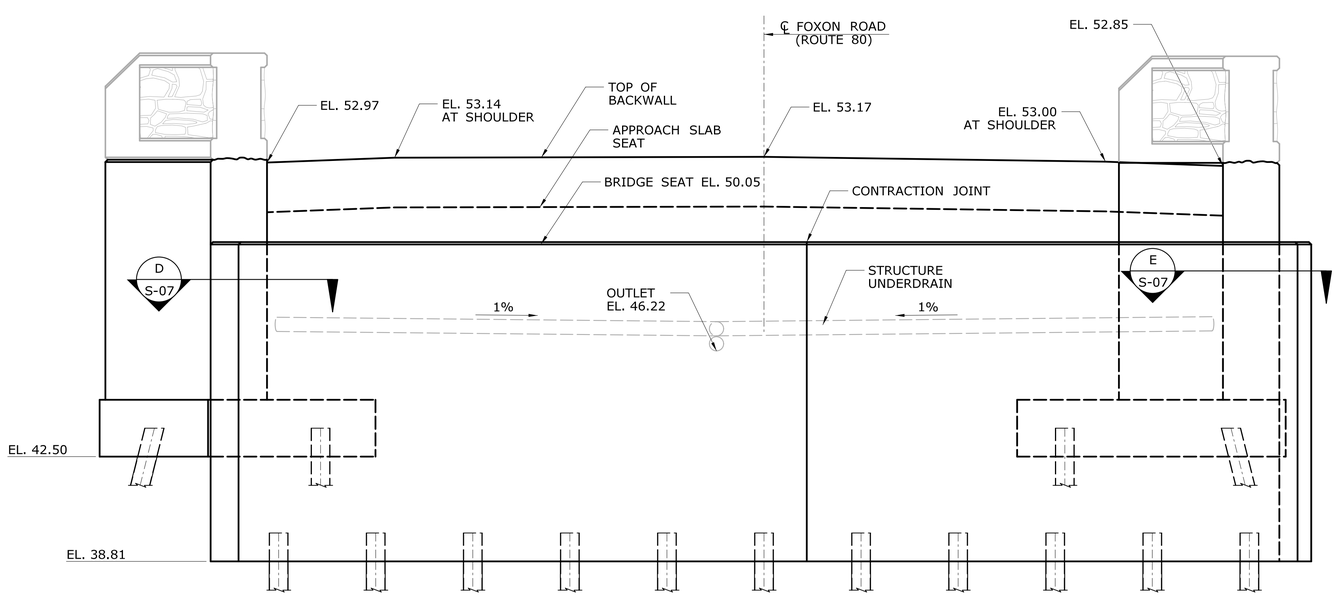

ELEVATION
SCALE: ⅜" = 1'-0"

NOTES:

THE LAP SPLICE LENGTH FOR THE REINFORCEMENT SHALL BE NO LESS THAN THE FOLLOWING:

BAR SIZE	MINIMUM SPLICE LENGTH
#4 OR #5	2'-0"
#6	2'-6"
#7	3'-0"

LAP SPLICES SHALL BE STAGGERED SO THAT 50% OR LESS OF THE BARS ARE SPLICED AT THE SAME LOCATION.

REV.	DATE	REVISION DESCRIPTION	SHEET NO.

THE INFORMATION, INCLUDING ESTIMATED QUANTITIES OF WORK, SHOWN ON THESE SHEETS IS BASED ON LIMITED INVESTIGATIONS BY THE STATE AND IS IN NO WAY WARRANTED TO INDICATE THE CONDITIONS OF ACTUAL QUANTITIES OF WORK WHICH WILL BE REQUIRED.

Plotted Date: 6/22/2017

DESIGNER/DRAFTER: **PKS/JV**
CHECKED BY: **MO/RJE**
SCALE AS NOTED

STATE OF CONNECTICUT
DEPARTMENT OF TRANSPORTATION

Filename: ...\SB_MSH_Br01127_098_0101_ABT_S-08.dgn

SIGNATURE/BLOCK:
STATE OF CONNECTICUT
JOSEPH E. SHEPHARD
012175
LICENSED PROFESSIONAL ENGINEER

STV Incorporated
185 Plains Road
Suite 208E
Milford, CT 06461

PROJECT TITLE:
REPLACEMENT OF BRIDGE NO. 01127 - FOXON ROAD (ROUTE 80) OVER FARM RIVER

TOWN: **NORTH BRANFORD**

DRAWING TITLE: **PLAN & ELEVATION ABUTMENT NO. 2**

PROJECT NO. **98-101**
DRAWING NO. **S-08**
SHEET NO. **04.09**

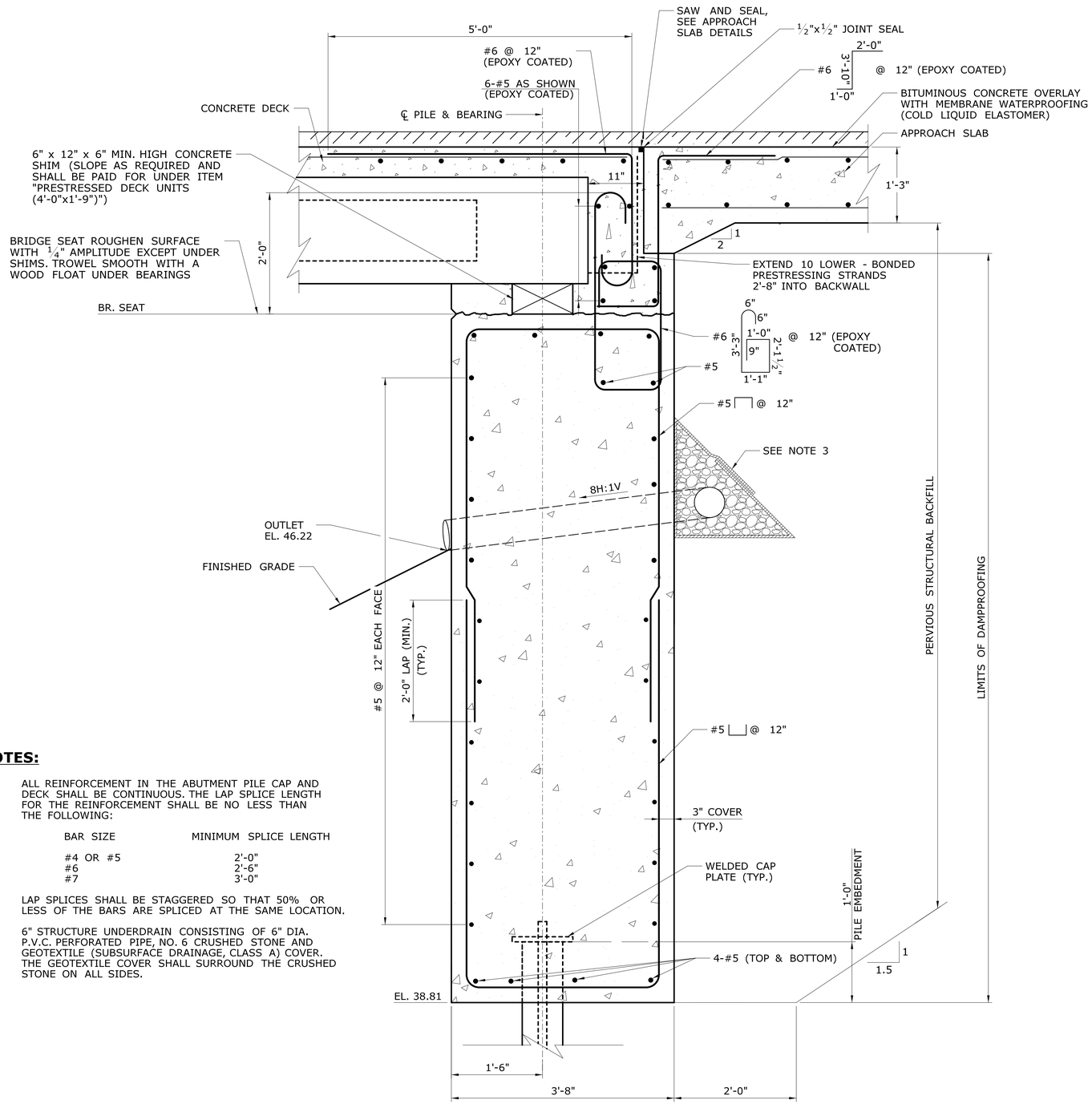

TYPICAL ABUTMENT SECTION

SCALE: 1" = 1'-0"

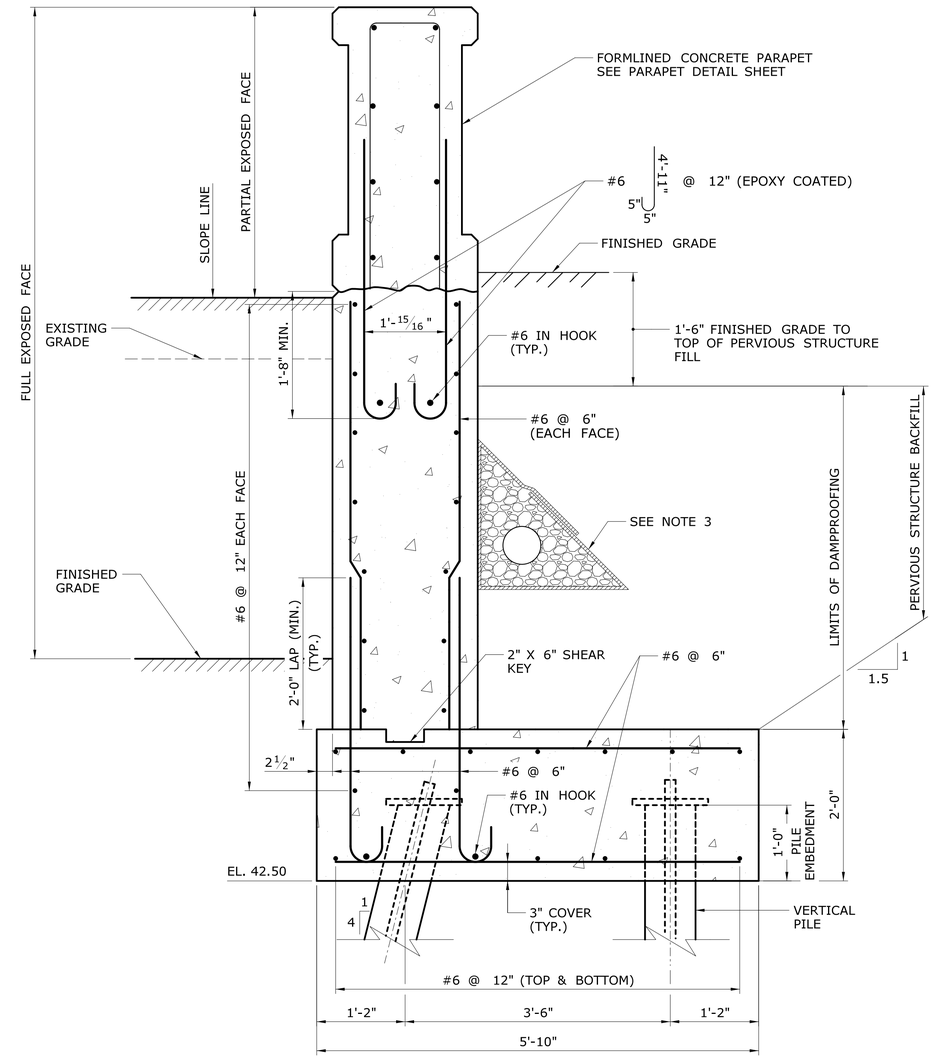

TYPICAL WINGWALL SECTION

SCALE: 1" = 1'-0"

NOTES:

1. ALL REINFORCEMENT IN THE ABUTMENT PILE CAP AND DECK SHALL BE CONTINUOUS. THE LAP SPLICE LENGTH FOR THE REINFORCEMENT SHALL BE NO LESS THAN THE FOLLOWING:

BAR SIZE	MINIMUM SPLICE LENGTH
#4 OR #5	2'-0"
#6	2'-6"
#7	3'-0"

2. LAP SPLICES SHALL BE STAGGERED SO THAT 50% OR LESS OF THE BARS ARE SPLICED AT THE SAME LOCATION.

3. 6" STRUCTURE UNDERDRAIN CONSISTING OF 6" DIA. P.V.C. PERFORATED PIPE, NO. 6 CRUSHED STONE AND GEOTEXTILE (SUBSURFACE DRAINAGE, CLASS A) COVER. THE GEOTEXTILE COVER SHALL SURROUND THE CRUSHED STONE ON ALL SIDES.

REV.	DATE	REVISION DESCRIPTION	SHEET NO.

THE INFORMATION, INCLUDING ESTIMATED QUANTITIES OF WORK, SHOWN ON THESE SHEETS IS BASED ON LIMITED INVESTIGATIONS BY THE STATE AND IS IN NO WAY WARRANTED TO INDICATE THE CONDITIONS OF ACTUAL QUANTITIES OF WORK WHICH WILL BE REQUIRED.

Plotted Date: 6/22/2017

DESIGNER/DRAFTER: **PKS**

CHECKED BY: **MO/RJE**

SCALE AS NOTED

STATE OF CONNECTICUT
DEPARTMENT OF TRANSPORTATION

Filename: ...\SB_MSH_Br01127_098_0101_ABD_S-09.dgn

SIGNATURE/ BLOCK:

STV Incorporated
185 Plains Road
Suite 208E
Milford, CT 06461

PROJECT TITLE:
REPLACEMENT OF BRIDGE NO. 01127 - FOXON ROAD (ROUTE 80) OVER FARM RIVER

TOWN: **NORTH BRANFORD**

DRAWING TITLE: **ABUTMENT DETAILS**

PROJECT NO. **98-101**

DRAWING NO. **S-09**

SHEET NO. **04.10**

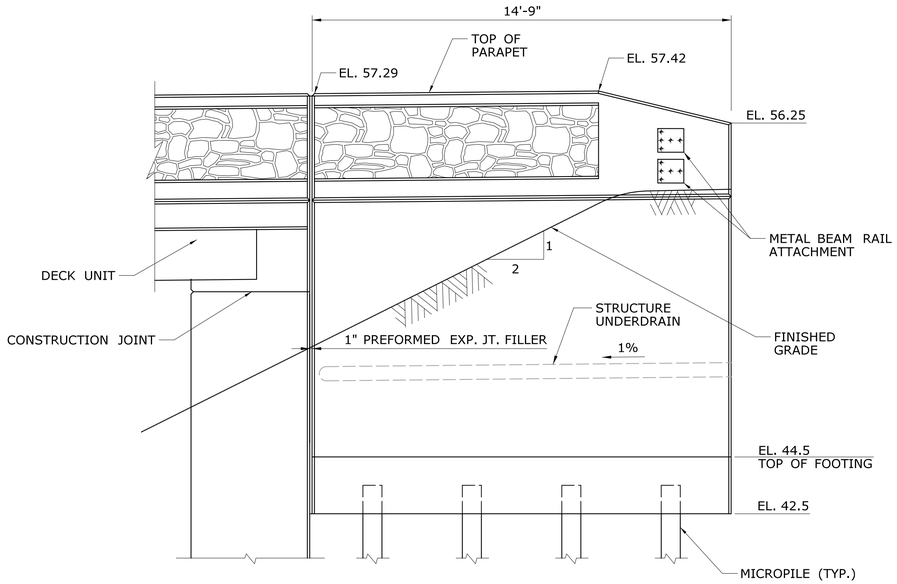

WINGWALL 1A

SCALE: 3/8" = 1'-0"

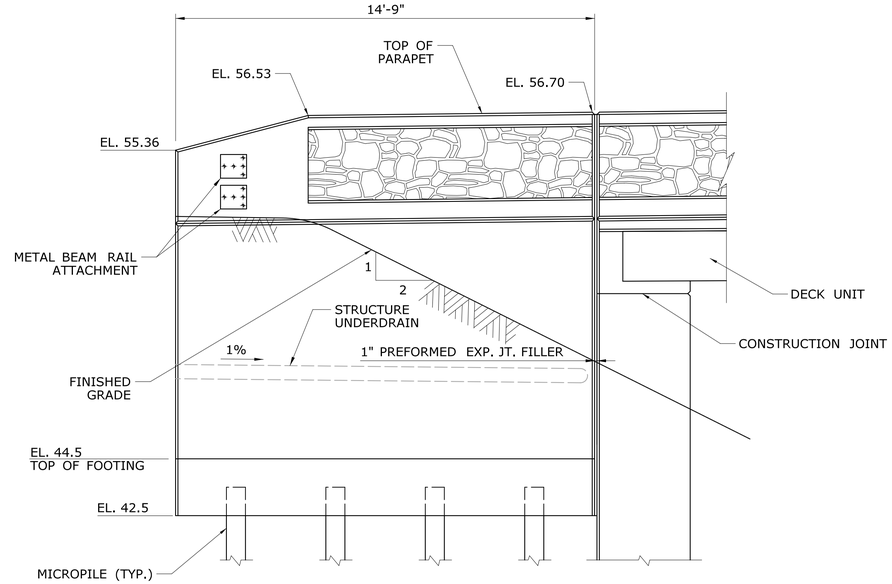

WINGWALL 2A

SCALE: 3/8" = 1'-0"

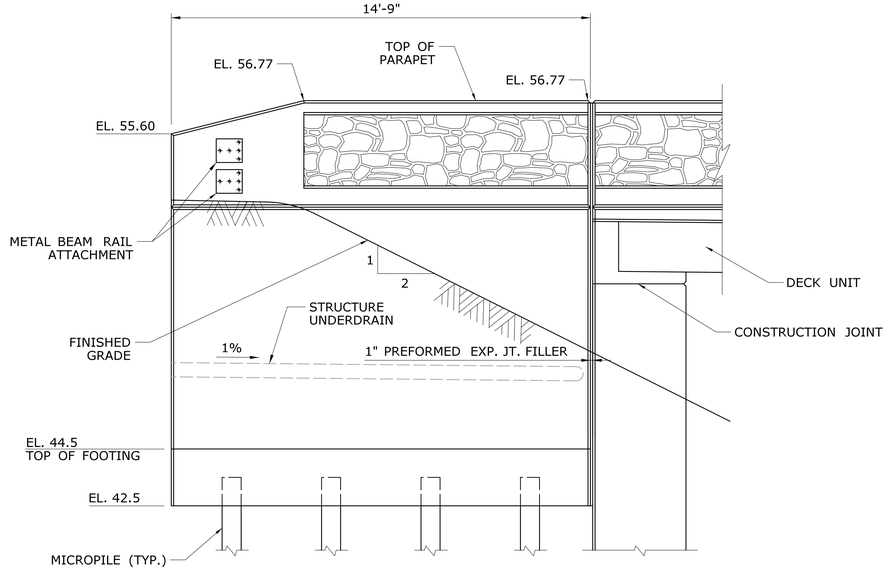

WINGWALL 1B

SCALE: 3/8" = 1'-0"

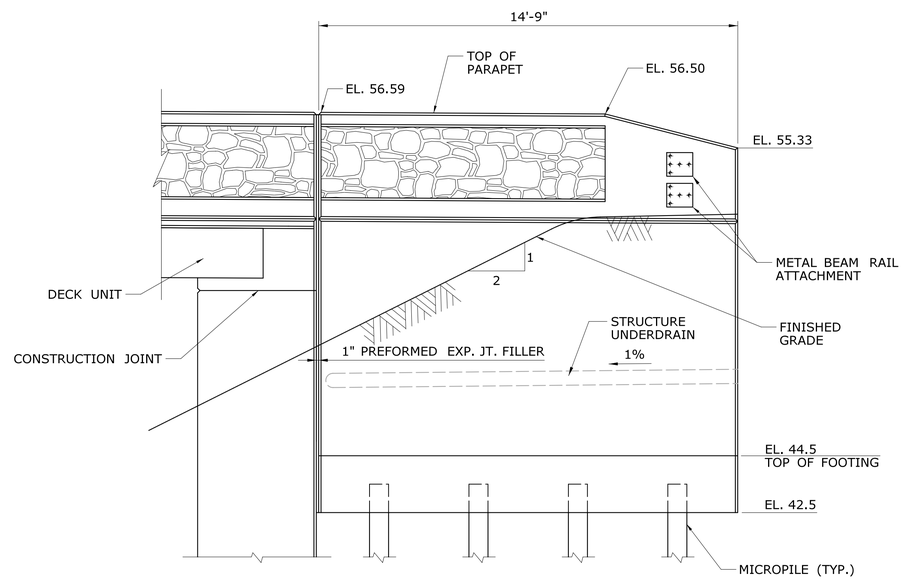

WINGWALL 2B

SCALE: 3/8" = 1'-0"

NOTES:

1. FOR ABUTMENT 1 PLAN AND ELEVATION, SEE DWG. NO. S-07.
2. FOR ABUTMENT 2 PLAN AND ELEVATION, SEE DWG. NO. S-08.
3. FOR TYPICAL WINGWALL SECTIONS, SEE DWG. NO. S-09.
4. TYPE R-B 350 METAL BEAM RAIL NOT SHOWN. FOR R-B 350 BRIDGE ATTACHED DETAILS, SEE DWG. NO. S-17.
5. "CLASS 'F' CONCRETE" SHALL BE USED FOR PARAPETS ON U-TYPE WINGWALLS. "CLASS 'A' CONCRETE" SHALL BE USED FOR THE ENTIRE SUBSTRUCTURE.

REV.	DATE	REVISION DESCRIPTION	SHEET NO.

THE INFORMATION, INCLUDING ESTIMATED QUANTITIES OF WORK, SHOWN ON THESE SHEETS IS BASED ON LIMITED INVESTIGATIONS BY THE STATE AND IS IN NO WAY WARRANTED TO INDICATE THE CONDITIONS OF ACTUAL QUANTITIES OF WORK WHICH WILL BE REQUIRED.

Plotted Date: 6/22/2017

DESIGNER/DRAFTER: PKS

CHECKED BY: MO/RJE

SCALE AS NOTED

STATE OF CONNECTICUT
DEPARTMENT OF TRANSPORTATION

Filename: ...\SB_MSH_Br01127_098_0101_WW_S-10.dgn

SIGNATURE/BLOCK:

STV Incorporated
185 Plains Road
Suite 208E
Milford, CT 06461

PROJECT TITLE:

REPLACEMENT OF BRIDGE NO. 01127 - FOXON ROAD (ROUTE 80) OVER FARM RIVER

TOWN: **NORTH BRANFORD**

DRAWING TITLE: **PLAN & ELEVATION WINGWALLS**

PROJECT NO. **98-101**

DRAWING NO. **S-10**

SHEET NO. **04.11**

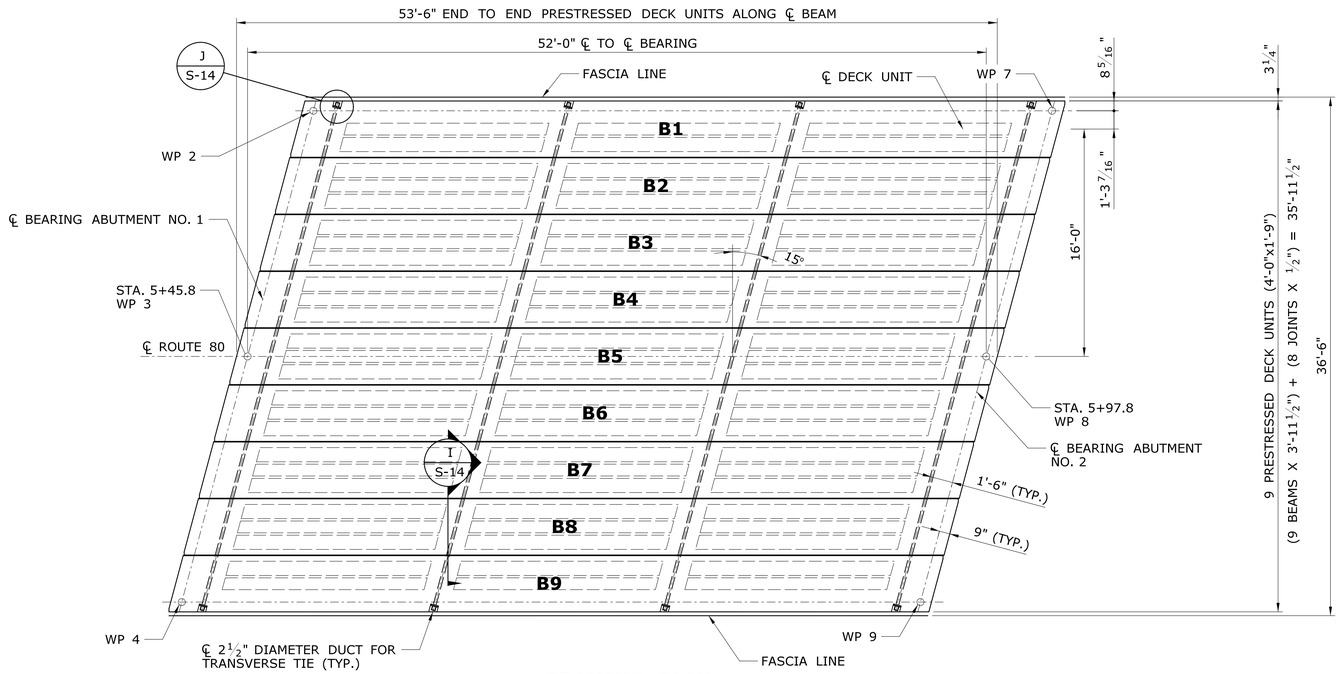

FRAMING PLAN

SCALE: 3/16" = 1'-0"

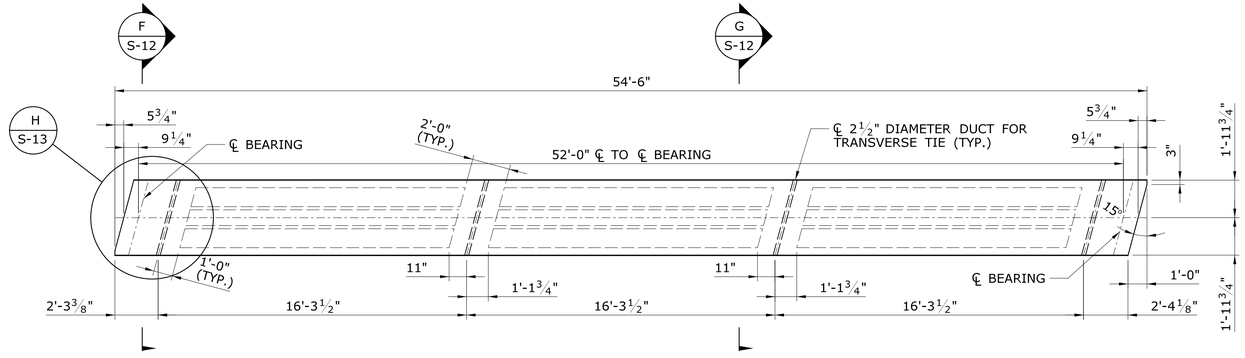

PLAN - TYPICAL BOX BEAM

SCALE: ¼" = 1'-0"

PRESTRESSED CONCRETE NOTES:

THE CONCRETE FOR THE PRESTRESSED MEMBERS SHALL CONFORM TO THE FOLLOWING REQUIREMENTS:

- MINIMUM COMPRESSIVE STRENGTH AT TRANSFER, f'_c = 5,500 PSI
- MINIMUM 28 DAY COMPRESSIVE STRENGTH, f'_c = 6,500 PSI

THE PRESTRESSING STRANDS SHALL BE 0.5" DIAMETER, 7 WIRE, UNCOATED, LOW RELAXATION STRANDS, CONFORMING TO THE REQUIREMENTS OF AASHTO M230 (ASTM A416), GRADE 270 (ULTIMATE STRENGTH, f'_s = 270 KSI). THE STRANDS SHALL HAVE AN INITIAL JACKING TENSION, f, OF 31 KIPS PER STRAND.

ALL NON-PRESTRESSED REINFORCEMENT SHALL BE EPOXY COATED AND CONFORM TO ASTM A615, GRADE 60. ALL REINFORCEMENT IN THE PRESTRESSED MEMBERS, INCLUDING REINFORCEMENT PROJECTING OUT OF THE MEMBERS, SHALL BE PAID FOR UNDER THE ITEM FOR "PRESTRESSED DECK UNITS (4'-0"x1'-9")".

THE DRILLING OF HOLES IN THE PRESTRESSED DECK UNITS OR THE USE OF POWER ACTUATED TOOLS ON PRESTRESSED DECK UNITS SHALL NOT BE PERMITTED.

THE TOP OF DECK UNITS SHALL RECEIVE A ROUGHENED FINISH.

THE FABRICATOR IS FULLY RESPONSIBLE FOR THE DESIGN OF THE LIFTING DEVICES, WHICH SHALL BE ADEQUATE FOR THE SAFETY FACTORS REQUIRED BY THE ERECTION PROCEDURE.

FINISHED DECK ELEVATIONS AND DEAD LOAD DEFLECTIONS (FEET)

BEAM MARK	FINISHED GRADES AND DEAD LOAD DEFLECTIONS	SPAN (L=52'-0")										
		C BEARING ABUTMENT NO. 1	0.10L	0.20L	0.30L	0.40L	0.50L	0.60L	0.70L	0.80L	0.90L	C BEARING ABUTMENT NO. 2
B1	FINISHED GRADE	53.75	53.70	53.65	53.59	53.54	53.49	53.44	53.38	53.33	53.28	53.22
	DEAD LOAD DEFLECTION	0	0.014	0.028	0.039	0.047	0.049	0.047	0.039	0.028	0.014	0
B5	FINISHED GRADE	53.68	53.65	53.63	53.60	53.57	53.55	53.52	53.49	53.47	53.44	53.42
	DEAD LOAD DEFLECTION	0	0.014	0.028	0.040	0.047	0.050	0.047	0.040	0.028	0.014	0
B9	FINISHED GRADE	53.27	53.26	53.26	53.260	53.25	53.23	53.20	53.18	53.15	53.12	53.10
	DEAD LOAD DEFLECTION	0	0.014	0.028	0.039	0.047	0.049	0.047	0.039	0.028	0.014	0

NOTE: THE DEAD LOAD DEFLECTIONS ARE DUE TO THE WEIGHT OF THE CONCRETE OVERLAY, PARAPET, AND WEARING SURFACE

REV.	DATE	REVISION DESCRIPTION	SHEET NO.

THE INFORMATION, INCLUDING ESTIMATED QUANTITIES OF WORK, SHOWN ON THESE SHEETS IS BASED ON LIMITED INVESTIGATIONS BY THE STATE AND IS IN NO WAY WARRANTED TO INDICATE THE CONDITIONS OF ACTUAL QUANTITIES OF WORK WHICH WILL BE REQUIRED.

Plotted Date: 6/22/2017

DESIGNER/DRAFTER: PKS/JV
CHECKED BY: MO/RJE
SCALE AS NOTED

STATE OF CONNECTICUT
DEPARTMENT OF TRANSPORTATION

Filename: ...\SB_MSH_Br01127_098_0101_FP_S-11.dgn

SIGNATURE/BLOCK:
STV Incorporated
185 Plains Road
Suite 208E
Milford, CT 06461

PROJECT TITLE:
REPLACEMENT OF BRIDGE NO. 01127 - FOXON ROAD (ROUTE 80) OVER FARM RIVER

TOWN: NORTH BRANFORD

DRAWING TITLE: FRAMING PLAN

PROJECT NO. 98-101
DRAWING NO. S-11
SHEET NO. 04.12

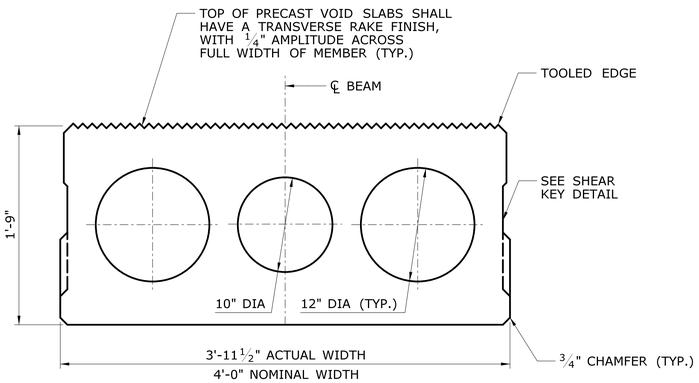

TYPICAL SLAB DIMENSIONS

SCALE: 1 1/2" = 1'-0"

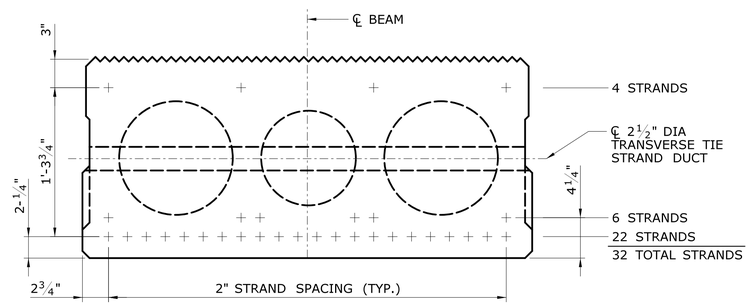

SECTION AT END F / S-11

SCALE: 1 1/2" = 1'-0"

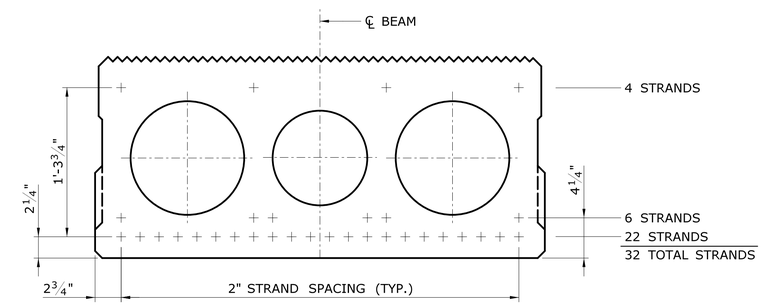

SECTION THROUGH VOID G / S-11

SCALE: 1 1/2" = 1'-0"

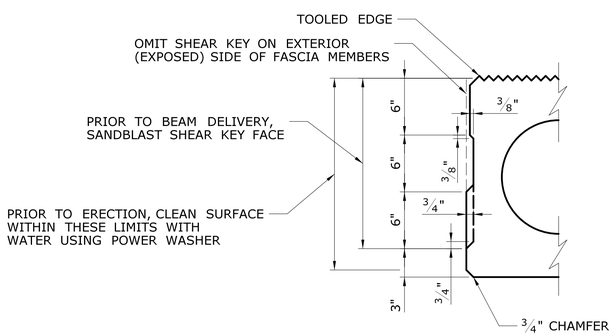

SHEAR KEY DETAIL

SCALE: 1 1/2" = 1'-0"

REV.	DATE	REVISION DESCRIPTION	SHEET NO.

THE INFORMATION, INCLUDING ESTIMATED QUANTITIES OF WORK, SHOWN ON THESE SHEETS IS BASED ON LIMITED INVESTIGATIONS BY THE STATE AND IS IN NO WAY WARRANTED TO INDICATE THE CONDITIONS OF ACTUAL QUANTITIES OF WORK WHICH WILL BE REQUIRED.

Plotted Date: 6/22/2017

DESIGNER/DRAFTER: PKS/JV

CHECKED BY: MO/RJE

SCALE AS NOTED

STATE OF CONNECTICUT
DEPARTMENT OF TRANSPORTATION

Filename: ...\SB_MSH_Br01127_098_0101_PDU_S-12.dgn

SIGNATURE/BLOCK:

STV Incorporated
185 Plains Road
Suite 208E
Milford, CT 06461

PROJECT TITLE:
REPLACEMENT OF BRIDGE NO. 01127 - FOXON ROAD (ROUTE 80) OVER FARM RIVER

TOWN: **NORTH BRANFORD**

DRAWING TITLE: **PRESTRESSED DECK UNIT DETAILS - 1**

PROJECT NO. 98-101

DRAWING NO. S-12

SHEET NO. 04.13

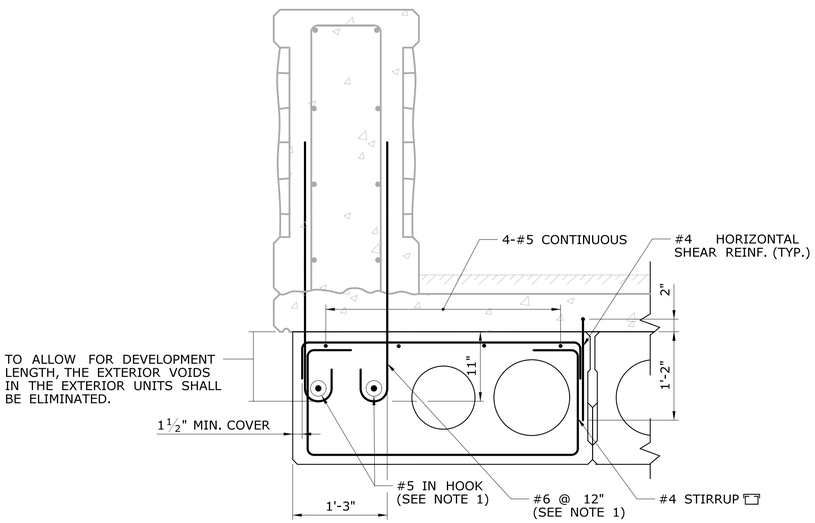

TYPICAL FASCIA SECTION

SCALE: 1" = 1'-0"

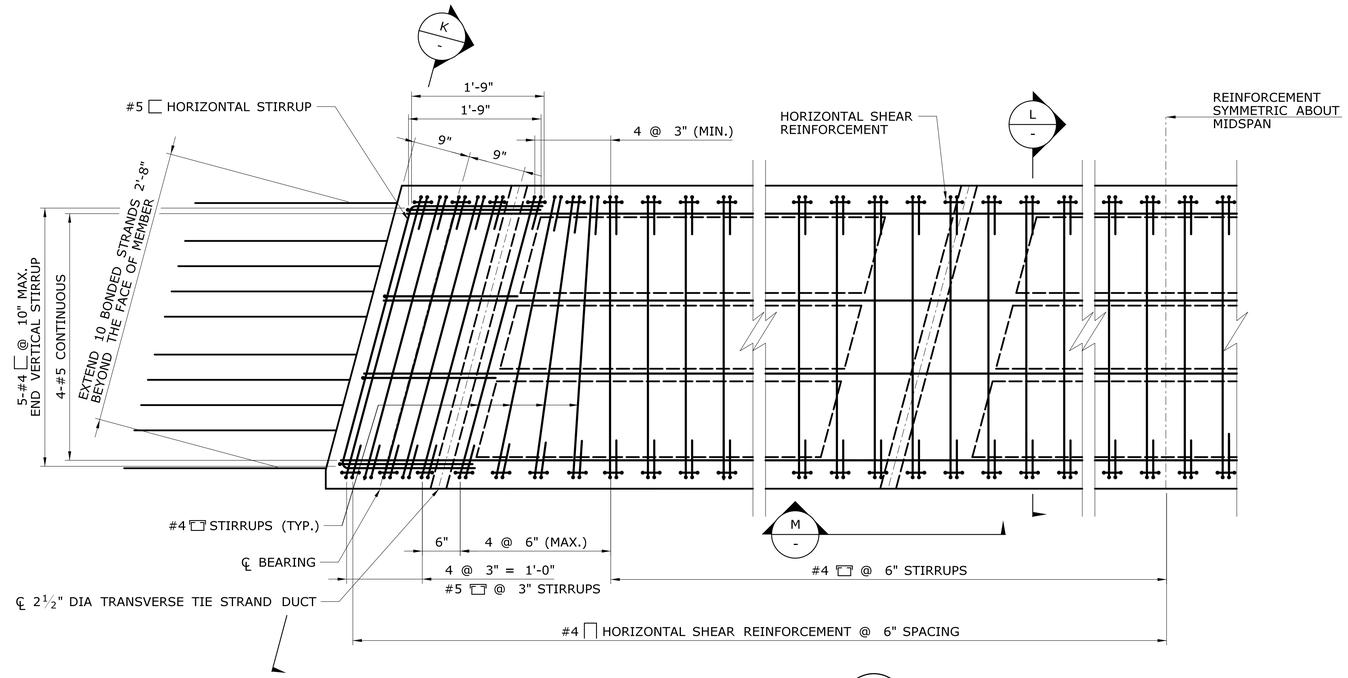

PLAN - BEAM REINFORCEMENT H / S-11

SCALE: 1" = 1'-0"

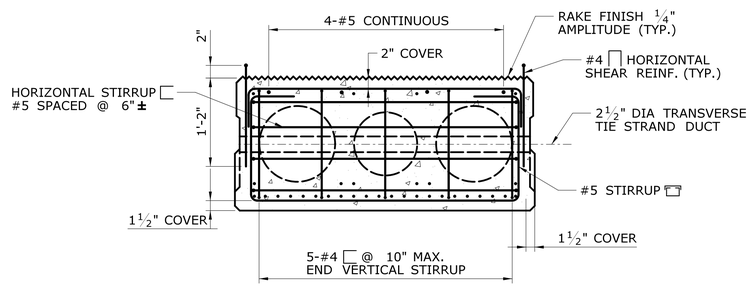

END SECTION K / -

SCALE: 1" = 1'-0"

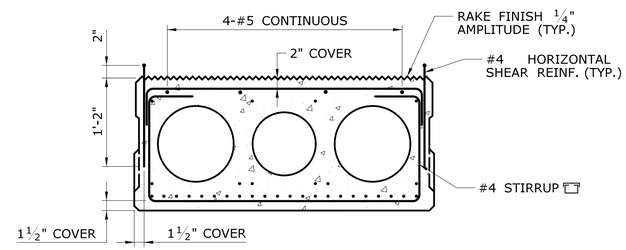

TYPICAL SECTION L / -

SCALE: 1" = 1'-0"

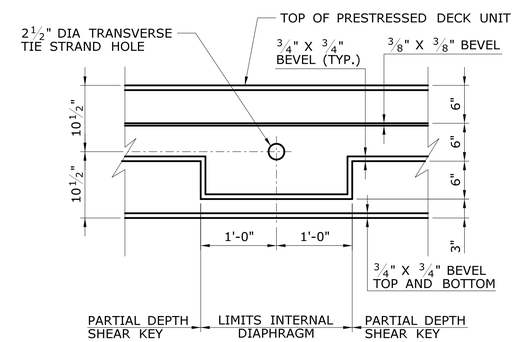

INTERNAL DIAPHRAGM DETAIL M / -

SCALE: 1" = 1'-0"

NOTES:

1. REINFORCEMENT TO BE PAID FOR UNDER THE ITEM "PRESTRESSED DECK UNITS (4'-0"x1'-9")".
2. OMIT SHEAR KEY ON FASCIA BEAMS.

REV.	DATE	REVISION DESCRIPTION	SHEET NO.

THE INFORMATION, INCLUDING ESTIMATED QUANTITIES OF WORK, SHOWN ON THESE SHEETS IS BASED ON LIMITED INVESTIGATIONS BY THE STATE AND IS IN NO WAY WARRANTED TO INDICATE THE CONDITIONS OF ACTUAL QUANTITIES OF WORK WHICH WILL BE REQUIRED.

Plotted Date: 6/22/2017

DESIGNER/DRAFTER: PKS/JV

CHECKED BY: MO/RJE

SCALE AS NOTED

STATE OF CONNECTICUT
DEPARTMENT OF TRANSPORTATION

Filename: ...\SB_MSH_Br01127_098_0101_PDU_S-13.dgn

SIGNATURE/BLOCK:

STV Incorporated
185 Plains Road
Suite 208E
Milford, CT 06461

PROJECT TITLE: REPLACEMENT OF BRIDGE NO. 01127 - FOXON ROAD (ROUTE 80) OVER FARM RIVER

TOWN: NORTH BRANFORD

DRAWING TITLE: PRESTRESSED DECK UNIT DETAILS - 2

PROJECT NO. 98-101

DRAWING NO. S-13

SHEET NO. 04.14

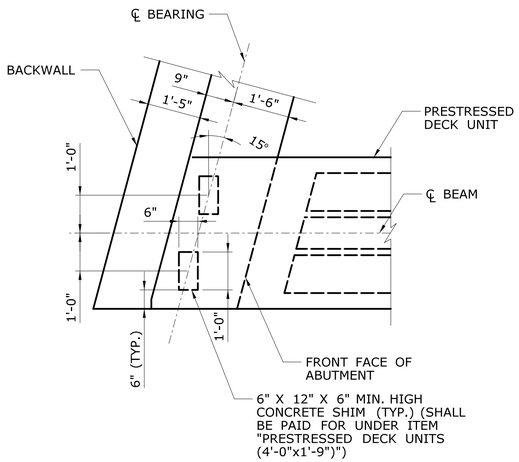

TYPICAL ERECTION SHIMS

SCALE: $\frac{1}{2}$" = 1'-0"

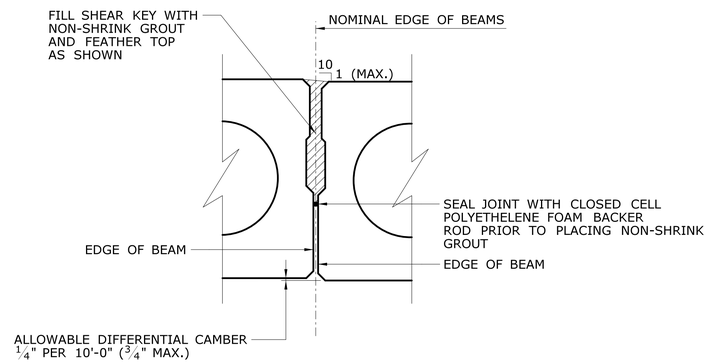

NOTES:

1. THE DECK UNITS SHALL BE PLACED AT THE NOMINAL SPACING SHOWN ON THE PLAN WITH A GAP BETWEEN THE UNITS. THE WIDTH OF THE GAPS WILL VARY DUE TO THE SWEEP OF THE UNITS.
2. GROUT FOR SHEAR KEYS SHALL BE RODDED OR VIBRATED TO ENSURE THAT ALL VOIDS IN THE SHEAR KEYS ARE FILLED.

TYPICAL LONGITUDINAL JOINT (I / S-11)

SCALE: $1\frac{1}{2}$" = 1'-0"

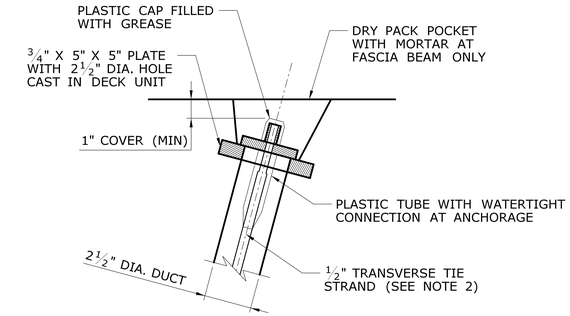

NOTES:

1. OTHER ANCHORAGE SYSTEMS MAY BE SUBSTITUTED WITH THE APPROVAL OF THE ENGINEER. ALTERNATE ANCHORAGE SYSTEMS SHALL BE WATERTIGHT AND CORROSION PROOF.
2. TRANSVERSE TIES SHALL BE COVERED BY A SEAMLESS POLYPROPYLENE SHEATH, WITH CORROSION INHIBITING GREASE BETWEEN THE STRAND AND SHEATH, FOR THE FULL LENGTH OF THE STRAND EXCEPT AT THE ANCHORAGE LOCATION.

TRANSVERSE TIE POCKET DETAIL (J / S-11)

SCALE: 3" = 1'-0"

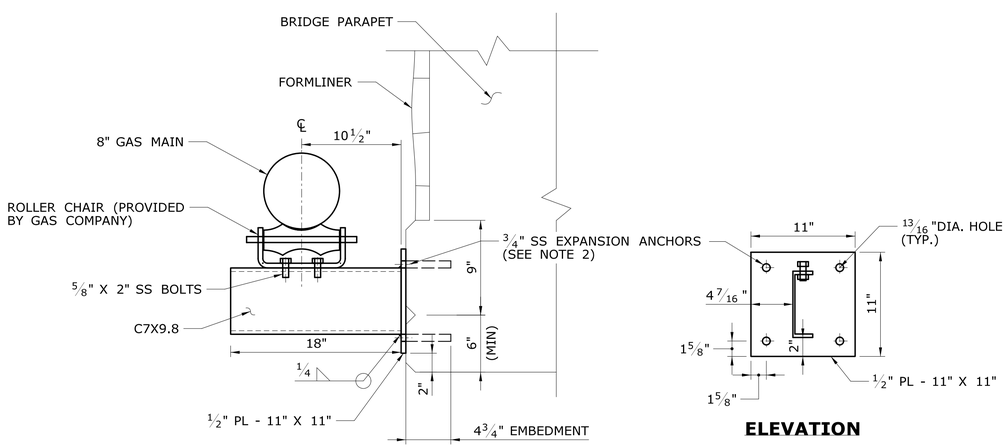

GAS MAIN SUPPORT DETAIL

SCALE: $1\frac{1}{2}$" = 1'-0"

TRANSVERSE TIE TENSIONING NOTES:

1. WHILE ERECTING THE PRESTRESSED MEMBERS, THE CONTRACTOR SHALL COVER AND PROTECT THE SHEAR KEYS FROM WEATHER AND DEBRIS UNTIL THEY ARE GROUTED.
2. AFTER ALL BEAMS HAVE BEEN ERECTED, TENSION EACH TRANSVERSE TIE TO 5 KIPS.
3. FILL ALL KEYWAYS WITH NON-SHRINK GROUT. THE CONTRACTOR SHALL COVER AND PROTECT THE KEYWAYS FROM THE WEATHER AND DEBRIS UNTIL THEY ARE FILLED.
4. AFTER THE GROUT HAS ATTAINED A STRENGTH OF 1500 PSI (BASED ON THE MANUFACTURER'S DIRECTIONS) TENSION EACH TRANSVERSE TIE TO 30 KIPS. NO TRAFFIC OR HEAVY EQUIPMENT WILL BE PERMITTED ON THE BEAMS UNTIL ALL TIES HAVE BEEN FULLY TENSIONED.
5. CONSTRUCTION OF THE DECK SHALL NOT BEGIN UNTIL ALL THE TRANSVERSE TIES HAVE BEEN FULLY TENSIONED.
6. CONCRETE FOR DECK AND PARAPET SECTIONS SHALL NOT BE PLACED UNTIL THE TRANSVERSE TIES HAVE BEEN FULLY TENSIONED.

GAS MAIN SUPPORT DETAIL NOTES:

1. FOR ADDITIONAL INFORMATION, SEE SPECIAL PROVISION "INSTALL 8 INCH GAS MAIN ON BRIDGE".
2. BRACKET ANCHOR BOLTS SHALL BE $\frac{3}{4}$" STAINLESS STEEL (ASTM FS93) MECHANICAL ANCHORS SHALL BE HILTI QUICK BOLT TYPE OR EQUAL, WASHER SHALL CONFORM TO ASTM A240.
3. BASEPLATE AND CHORDS SHALL BE ASTM A36 (36 KSI) OR HIGHER.
4. THE PIPE SUPPORT SHALL BE HOT-DIPPED GALVANIZED AFTER FABRICATION IN ACCORDANCE WITH ASTM 123.
5. WELDING SHALL CONFORM TO AWS D1.1.
6. (3) BRACKETS REQUIRED TOTAL.
7. BRACKETS SHALL BE SPACED AT 15'-0" ON CENTER. THE CENTER BRACKET SHALL BE LOCATED AT MIDSPAN.

REV.	DATE	REVISION DESCRIPTION	SHEET NO.

THE INFORMATION, INCLUDING ESTIMATED QUANTITIES OF WORK, SHOWN ON THESE SHEETS IS BASED ON LIMITED INVESTIGATIONS BY THE STATE AND IS IN NO WAY WARRANTED TO INDICATE THE CONDITIONS OF ACTUAL QUANTITIES OF WORK WHICH WILL BE REQUIRED.

Plotted Date: 6/22/2017

DESIGNER/DRAFTER: PKS/JV
CHECKED BY: MO/RJE
SCALE AS NOTED

STATE OF CONNECTICUT
DEPARTMENT OF TRANSPORTATION

Filename: ..\SB_MSH_Br01127_098_0101_PDU_S-14.dgn

SIGNATURE/BLOCK:
STATE OF CONNECTICUT JOHN C. SHEPPARD #17175 LICENSED PROFESSIONAL ENGINEER
STV Incorporated
185 Plains Road
Suite 208E
Milford, CT 06461

PROJECT TITLE:
REPLACEMENT OF BRIDGE NO. 01127 - FOXON ROAD (ROUTE 80) OVER FARM RIVER

TOWN: NORTH BRANFORD

DRAWING TITLE: PRESTRESSED DECK UNIT DETAILS - 3

PROJECT NO. 098-101
DRAWING NO. S-14
SHEET NO. 04.15

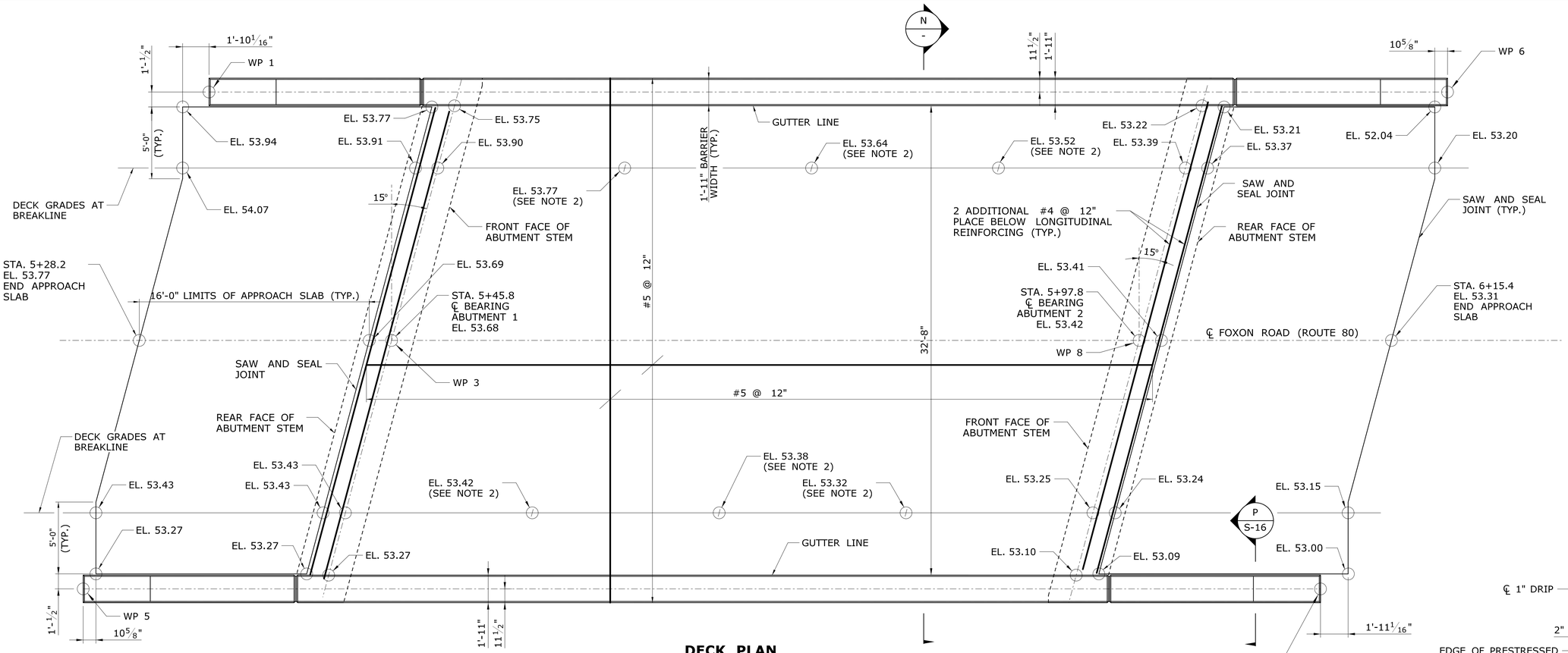

DECK PLAN

SCALE: 1/4" = 1'-0"

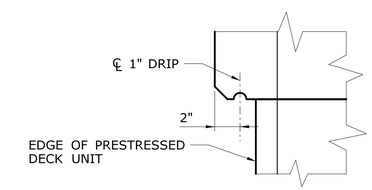

DRIP DETAIL O

SCALE: 2" = 1'-0"

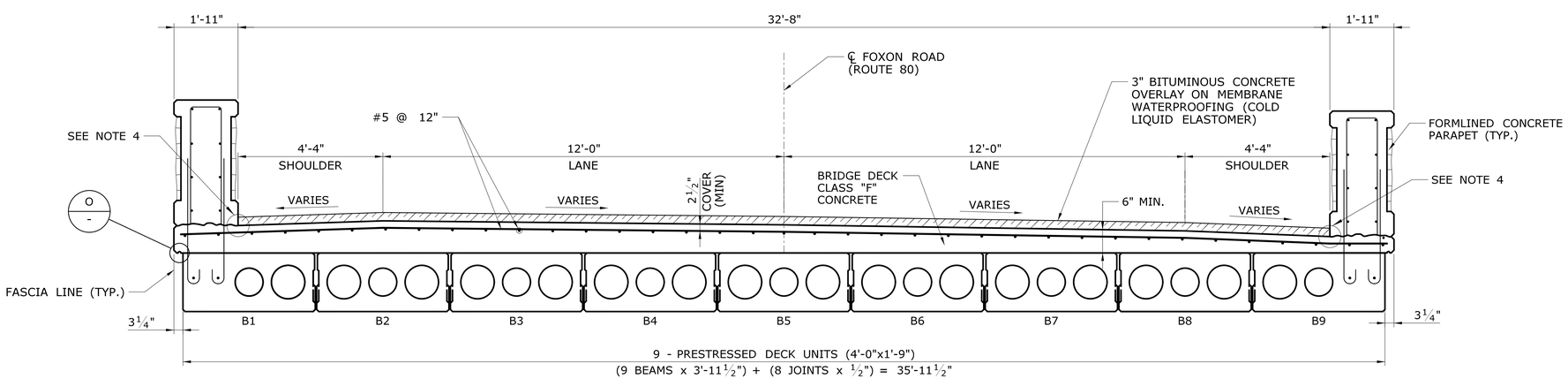

TYPICAL DECK SECTION N

SCALE: 1/2" = 1'-0"

NOTES:

1. ALL REINFORCEMENTS IN THE DECK AND BARRIER SHALL BE CONTINUOUS. THE LAP SPLICE LENGTH FOR THE REINFORCEMENT SHALL BE NO LESS THAN THE FOLLOWING:

BAR SIZE	MINIMUM SPLICE LENGTH
#4 OR #5	2'-0"
#6	2'-6"
#7	3'-0"

LAP SPLICES SHALL BE STAGGERED SO THAT 50% OR LESS OF THE BARS ARE SPLICED AT THE SAME LOCATION.

2. GRADES AT QUARTER POINTS BETWEEN ℄ BEARINGS
3. ALL GRADES AT TOP OF BITUMINOUS CONCRETE OVERLAY
4. EXTEND THE MEMBRANE WATERPROOFING (COLD LIQUID ELASTOMER) 2" ALONG THE VERTICAL FACE OF THE PARAPET WALL.

REV.	DATE	REVISION DESCRIPTION	SHEET NO.

THE INFORMATION, INCLUDING ESTIMATED QUANTITIES OF WORK, SHOWN ON THESE SHEETS IS BASED ON LIMITED INVESTIGATIONS BY THE STATE AND IS IN NO WAY WARRANTED TO INDICATE THE CONDITIONS OF ACTUAL QUANTITIES OF WORK WHICH WILL BE REQUIRED.

Plotted Date: 6/22/2017

DESIGNER/DRAFTER: PKS
CHECKED BY: MO/RJE
SCALE AS NOTED

STATE OF CONNECTICUT
DEPARTMENT OF TRANSPORTATION

Filename: ...\SB_MSH_Br01127_098_0101_DPS_S-15.dgn

SIGNATURE/BLOCK:

STV Incorporated
185 Plains Road
Suite 208E
Milford, CT 06461

PROJECT TITLE:
REPLACEMENT OF BRIDGE NO. 01127 - FOXON ROAD (ROUTE 80) OVER FARM RIVER

TOWN: NORTH BRANFORD

DRAWING TITLE: DECK PLAN & SECTION

PROJECT NO. 98-101
DRAWING NO. S-15
SHEET NO. 04.16

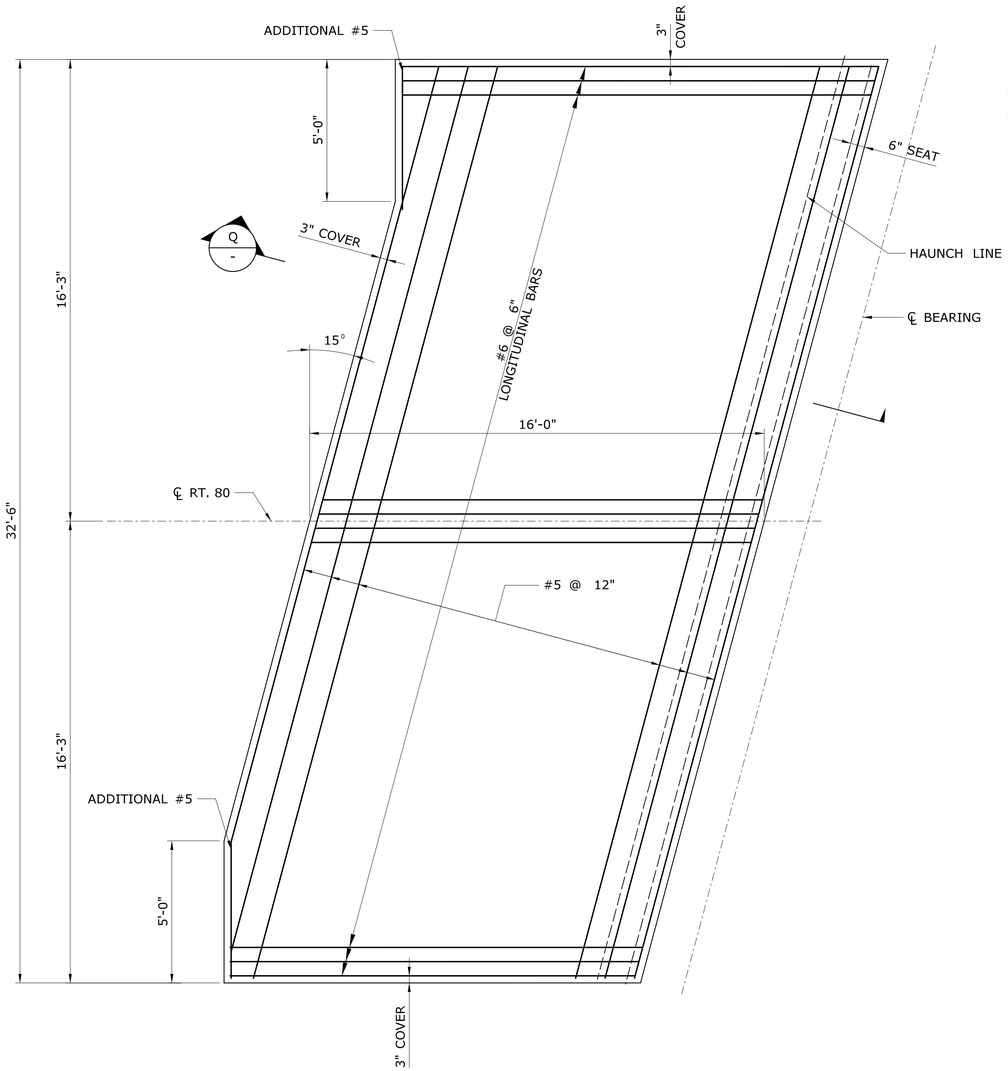

NOTE: ABUTMENT NO. 1 SHOWN, ABUTMENT NO. 2 OPPOSITE HAND

APPROACH SLAB PLAN

SCALE: $\frac{3}{8}$" = 1'-0"

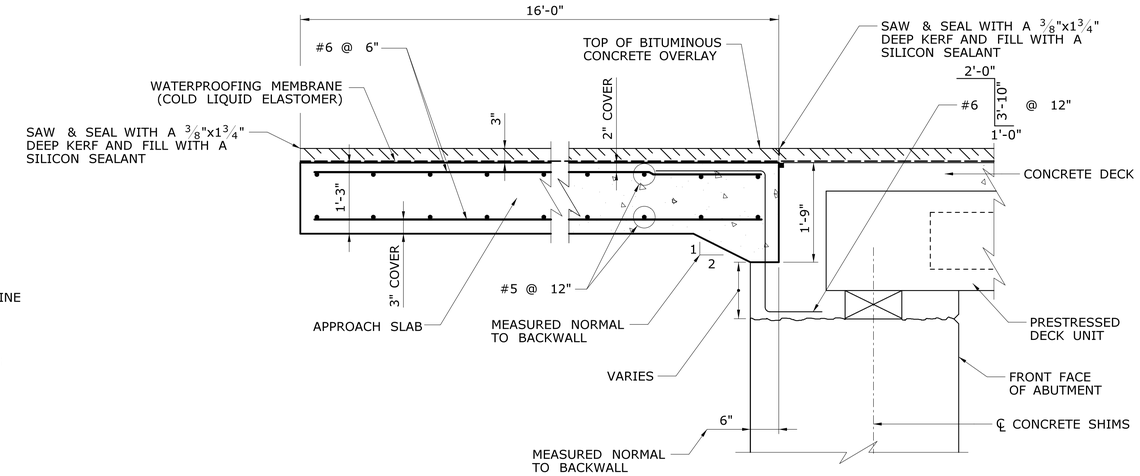

SECTION - APPROACH SLAB DETAIL (Q / -)

SCALE: $\frac{3}{4}$" = 1'-0"

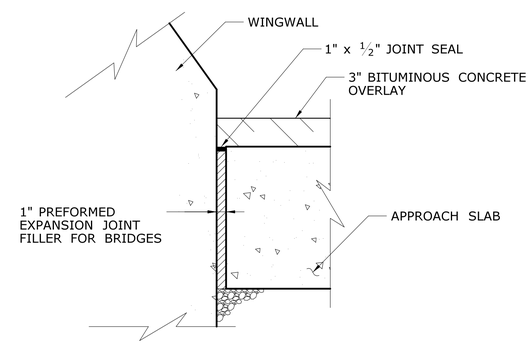

SECTION - APPROACH SLAB AT GUTTER LINE (P / S-15)

SCALE: $1\frac{1}{2}$" = 1'-0"

NOTES:

ALL REINFORCEMENTS IN APPROACH SLAB SHALL BE CONTINUOUS. THE LAP SPLICE LENGTH FOR THE REINFORCEMENT SHALL BE NO LESS THAN THE FOLLOWING:

BAR SIZE	MINIMUM SPLICE LENGTH
#4 OR #5	2'-0"
#6	2'-6"
#7	3'-0"

LAP SPLICES SHALL BE STAGGERED SO THAT 50% OR LESS OF THE BARS ARE SPLICED AT THE SAME LOCATION.

REV.	DATE	REVISION DESCRIPTION	SHEET NO.

THE INFORMATION, INCLUDING ESTIMATED QUANTITIES OF WORK, SHOWN ON THESE SHEETS IS BASED ON LIMITED INVESTIGATIONS BY THE STATE AND IS IN NO WAY WARRANTED TO INDICATE THE CONDITIONS OF ACTUAL QUANTITIES OF WORK WHICH WILL BE REQUIRED.

Plotted Date: 6/22/2017

DESIGNER/DRAFTER: PKS
CHECKED BY: MO
SCALE AS NOTED

STATE OF CONNECTICUT
DEPARTMENT OF TRANSPORTATION

Filename: ...\SB_MSH_Br01127_098_0101_ASD_S-16.dgn

SIGNATURE/BLOCK:

STV Incorporated
185 Plains Road
Suite 208E
Milford, CT 06461

PROJECT TITLE:
REPLACEMENT OF BRIDGE NO. 01127 - FOXON ROAD (ROUTE 80) OVER FARM RIVER

TOWN: NORTH BRANFORD

DRAWING TITLE: APPROACH SLAB DETAILS

PROJECT NO. 98-101
DRAWING NO. S-16
SHEET NO. 04.17

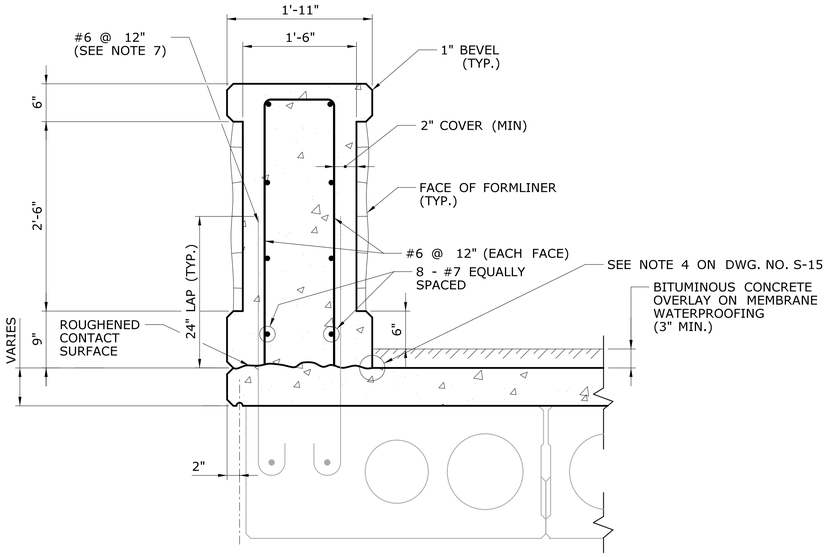

STANDARD PARAPET ON VOIDED SLAB

SCALE: 1" = 1'-0"

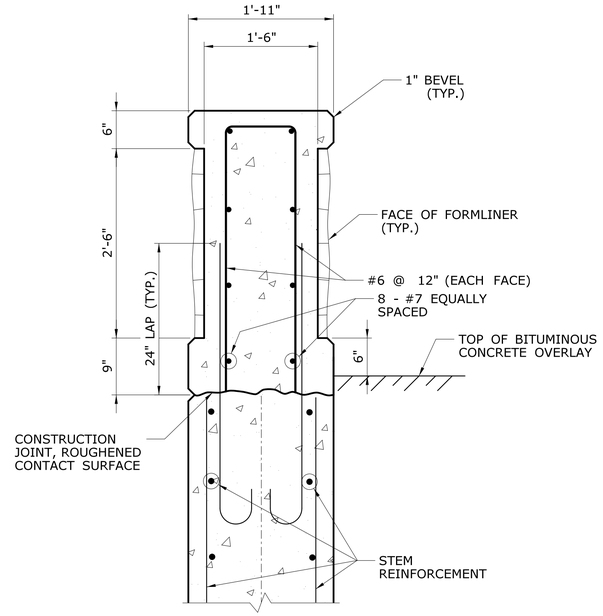

STANDARD WINGWALL PARAPET

SCALE: 1" = 1'-0"

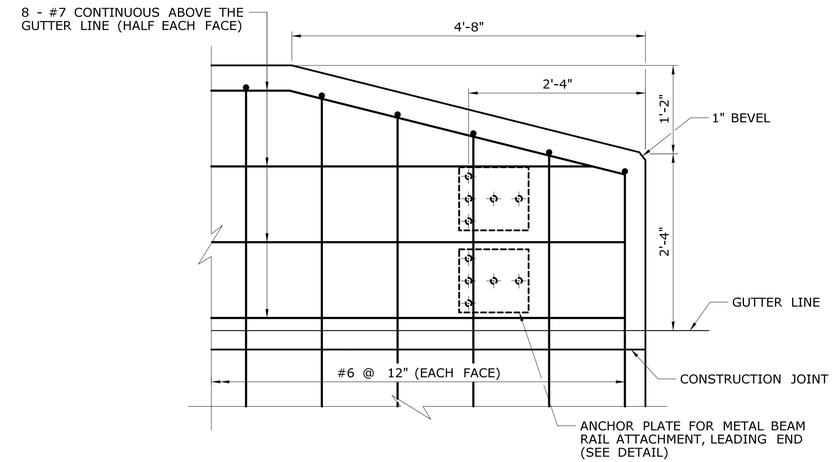

PARAPET REINFORCEMENT AT LEADING END

SCALE: 1" = 1'-0"

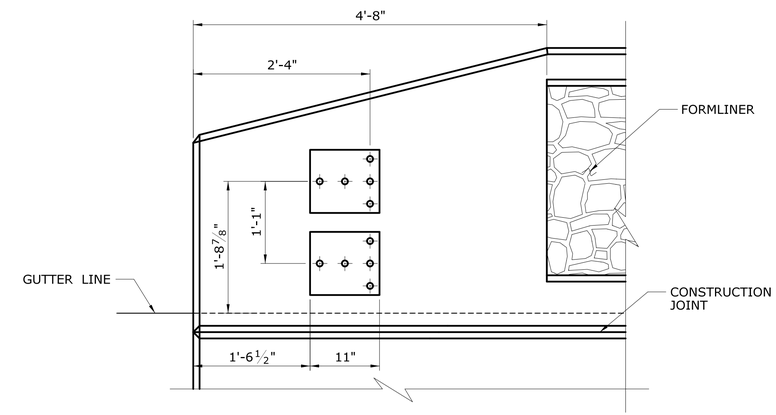

VIEW S/-

SCALE: 1" = 1'-0"

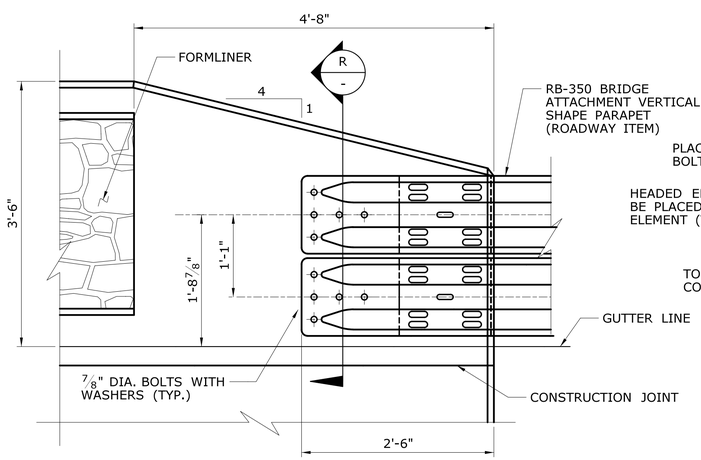

LEADING END R-B 350 RAIL ATTACHMENT

SCALE: 1" = 1'-0"

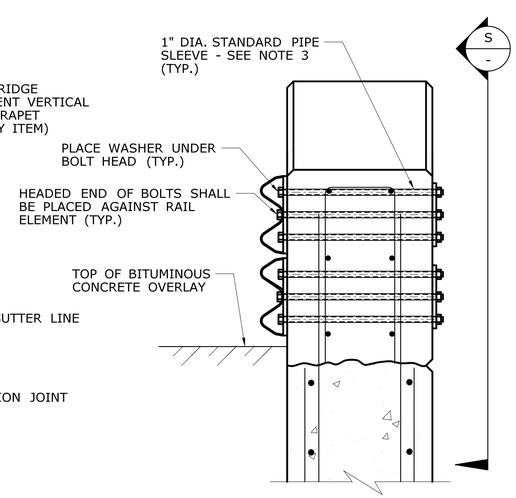

SECTION R/-

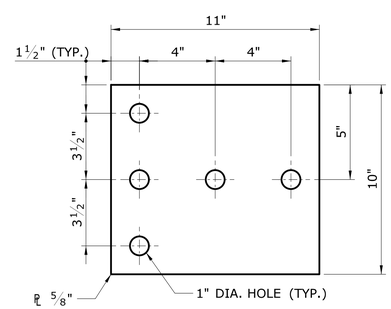

ANCHOR PLATE DETAIL

SCALE: 3" = 1'-0"

NOTES:

1. STEEL PLATES SHALL CONFORM TO THE REQUIREMENTS OF ASTM A36M. THE STEEL PLATES SHALL BE HOT-DIP GALVANIZED IN ACCORDANCE WITH THE REQUIREMENTS OF ASTM A123.
2. ANCHOR BOLTS SHALL CONFORM TO THE REQUIREMENTS OF ASTM A325, MECHANICALLY GALVANIZED.
3. 1" DIAMETER PIPE SHALL CONFORM TO ASTM A53, GRADE B OR ASTM A501 AND SHALL BE GALVANIZED IN ACCORDANCE WITH THE REQUIREMENTS OF ASTM A123.
4. GUIDERAIL ELEMENTS SHALL BE PAID FOR UNDER THE APPLICABLE ROADWAY ITEMS.
5. ALL RAIL ANCHORAGE MATERIAL REQUIRED FOR END ATTACHMENTS SHALL BE PAID FOR UNDER THE APPLICABLE ROADWAY ITEMS.
6. LONGITUDINAL REINFORCEMENT SHALL BE CONTINUOUS WITH MINIMUM LAP SPLICES OF 3'-0".
7. REINFORCEMENT TO BE PAID FOR UNDER THE ITEM "PRESTRESSED DECK UNITS (4'-0"x1'-9")".

REV.	DATE	REVISION DESCRIPTION	SHEET NO.

THE INFORMATION, INCLUDING ESTIMATED QUANTITIES OF WORK, SHOWN ON THESE SHEETS IS BASED ON LIMITED INVESTIGATIONS BY THE STATE AND IS IN NO WAY WARRANTED TO INDICATE THE CONDITIONS OF ACTUAL QUANTITIES OF WORK WHICH WILL BE REQUIRED.

Plotted Date: 6/22/2017

DESIGNER/DRAFTER: PKS
CHECKED BY: MO
SCALE AS NOTED

STATE OF CONNECTICUT
DEPARTMENT OF TRANSPORTATION

Filename: ...\SB_MSH_Br01127_098_0101_BAD_S-17.dgn

SIGNATURE/BLOCK:
STV Incorporated
185 Plains Road
Suite 208E
Milford, CT 06461

PROJECT TITLE:
REPLACEMENT OF BRIDGE NO. 01127 - FOXON ROAD (ROUTE 80) OVER FARM RIVER

TOWN: NORTH BRANFORD

DRAWING TITLE: PARAPET DETAILS

PROJECT NO. 98-101
DRAWING NO. S-17
SHEET NO. 04.18

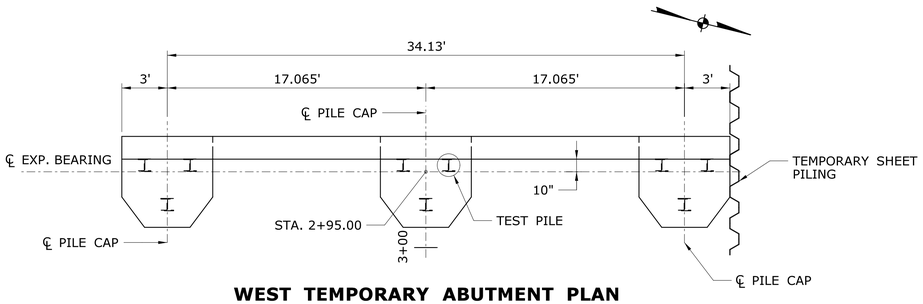

WEST TEMPORARY ABUTMENT PLAN

SCALE: 1" = 5'

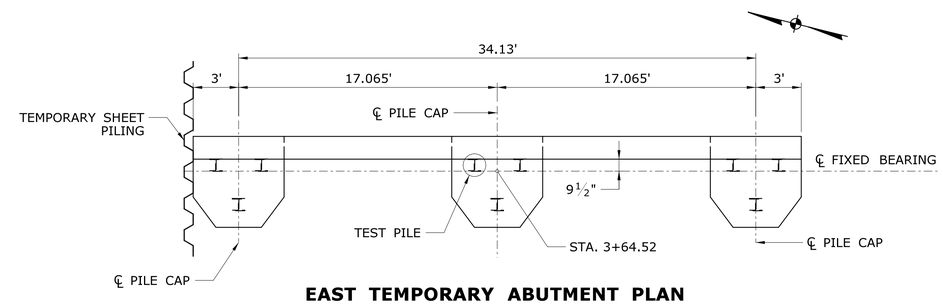

EAST TEMPORARY ABUTMENT PLAN

SCALE: 1" = 5'

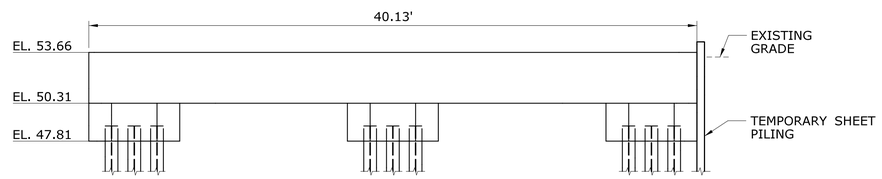

WEST TEMPORARY ABUTMENT ELEVATION

SCALE: 1" = 5'

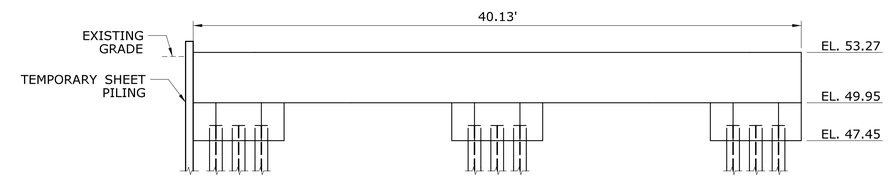

EAST TEMPORARY ABUTMENT ELEVATION

SCALE: 1" = 5'

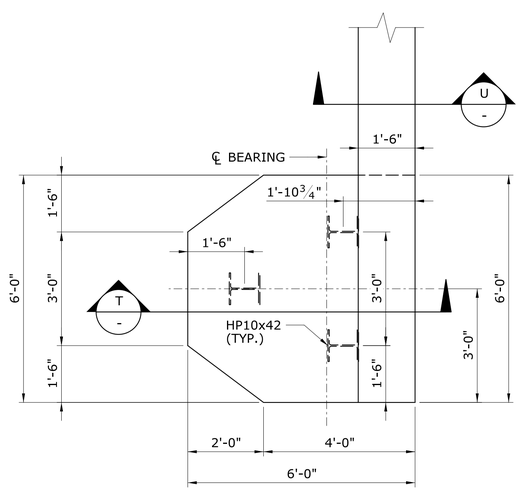

TYPICAL PILE CAP DETAIL

SCALE: ½" = 1'-0"

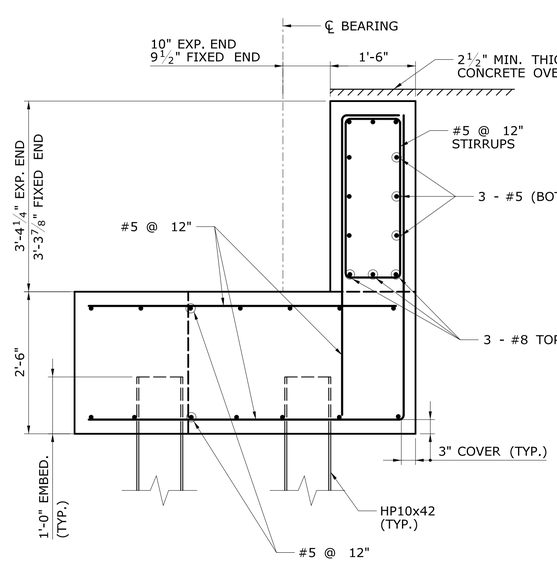

SECTION T

SCALE: ¾" = 1'-0"

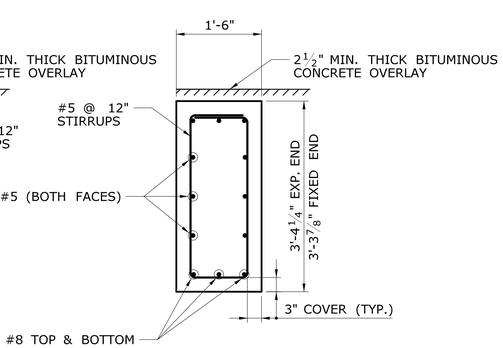

SECTION U

SCALE: ¾" = 1'-0"

	WEST ABUT.	EAST ABUT.
PROPOSED PILE CUTOFF ELEVATION	+48.50	+48.15
ESTIMATED TIP ELEVATION	-2	-3
ESTIMATED PILE LENGTH	50.50 FT	51.15 FT
TEST PILE ORDER LENGTH	60 FT	60 FT
ESTIMATED PRODUCTION PILE ORDER LENGTH	55 FT	55 FT

DESIGN LOADS	
ULTIMATE PILE CAPACITY	315 KIPS
MAXIMUM FACTORED AXIAL LOAD (STRENGTH LIMIT STATE)	205 KIPS
MAXIMUM FACTORED AXIAL LOAD (SERVICE LIMIT STATE)	135 KIPS

NOTES:

1. ALL REINFORCEMENT IN THE ABUTMENT PILE CAP SHALL BE CONTINUOUS. THE LAP SPLICE LENGTH FOR THE REINFORCEMENT SHALL BE NO LESS THAN THE FOLLOWING:

BAR SIZE	MINIMUM SPLICE LENGTH
#4 OR #5	2'-0"
#6	2'-6"
#7	3'-0"
#8	3'-6"

LAP SPLICES SHALL BE STAGGERED SO THAT 50% OR LESS OF THE BARS ARE SPLICED AT THE SAME LOCATION.

2. CONCRETE:
   CLASS "A" CONCRETE f'c = 3,000 PSI
3. REINFORCEMENT:
   (ASTM A615 GRADE 60) fy = 60,000 PSI
4. STRUCTURAL STEEL:
   (AASHTO M270, GRADE 50) Fy = 50,000 PSI
5. PILES ARE DRIVEN TO REFUSAL, TO BEAR ON BED ROCK.
6. PILES SHALL BE CUT OFF 1'-0" BELOW FINISHED GRADE.
7. A DRIVING SHOE SHALL BE AFFIXED TO THE TIP OF THE PILE.

REV.	DATE	REVISION DESCRIPTION	SHEET NO.

THE INFORMATION, INCLUDING ESTIMATED QUANTITIES OF WORK, SHOWN ON THESE SHEETS IS BASED ON LIMITED INVESTIGATIONS BY THE STATE AND IS IN NO WAY WARRANTED TO INDICATE THE CONDITIONS OF ACTUAL QUANTITIES OF WORK WHICH WILL BE REQUIRED.

Plotted Date: 7/12/2017

DESIGNER/DRAFTER: PKS/JV

CHECKED BY: RJE

SCALE AS NOTED

STATE OF CONNECTICUT
DEPARTMENT OF TRANSPORTATION

Filename: ...\SB_MSH_Br01127_098_0101_TAB_S-18.dgn

SIGNATURE/BLOCK:

STV Incorporated
185 Plains Road
Suite 208E
Milford, CT 06461

PROJECT TITLE:
REPLACEMENT OF BRIDGE NO. 01127 - FOXON ROAD (ROUTE 80) OVER FARM RIVER

TOWN: NORTH BRANFORD

DRAWING TITLE: TEMPORARY BRIDGE ABUTMENT DETAILS

PROJECT NO. 98-101

DRAWING NO. S-18

SHEET NO. 04.19