GENERAL NOTES

SPECIFICATIONS: CONNECTICUT DEPARTMENT OF TRANSPORTATION FORM 817 (2016), SUPPLEMENTAL SPECIFICATIONS DATED JANUARY 2017 AND SPECIAL PROVISIONS.

DESIGN SPECIFICATIONS: LRFD BRIDGE DESIGN SPECIFICATIONS 7TH EDITION (2014), WITH INTERIM SPECIFICATIONS UP TO AND INCLUDING 2016, AS SUPPLEMENTED BY THE CONNECTICUT DEPARTMENT OF TRANSPORTATION BRIDGE DESIGN MANUAL (2003).

ALLOWABLE DESIGN STRESSES:

CLASS 'A' CONCRETE:
BASED ON f'c = 3,000 psi

CLASS 'F' CONCRETE:
BASED ON f'c = 4,000 psi

THE SPECIFIED CONCRETE STRENGTH USED IN DESIGN, f'c, OF THE CONCRETE COMPONENTS IS NOTED ABOVE. THE MINIMUM COMPRESSIVE STRENGTH OF THE CONCRETE IN THE CONSTRUCTED COMPONENTS SHALL CONFORM TO THE REQUIREMENTS OF "SECTION 6.01 CONCRETE FOR STRUCTURES".

REINFORCEMENT:
ASTM A615 GRADE 60
Fy = 60,000 psi

STRUCTURAL STEEL:
AASHTO M270 GRADE HPS 70W
Fy = 70,000 psi

AASHTO M270 GRADE 50W
Fy = 50,000 psi
1

LIVE LOAD: HL-93 DESIGN VEHICLE
(2) CTDOT LEGAL VEHICLES
(10) CTDOT PERMIT VEHICLES

FUTURE PAVING ALLOWANCE: NONE

BITUMINOUS CONCRETE OVERLAY: THIS SHALL CONSIST OF TWO LIFTS. THE FIRST SHALL BE HMA S0.25 - TRAFFIC LEVEL 2 (1" THICK) AND THE SECOND SHALL BE HMA S0.5 - TRAFFIC LEVEL 2 (2" THICK).

FOUNDATION PRESSURES: THE VARIOUS GROUP LOADINGS NOTED ON THE SUBSTRUCTURE PLAN SHEETS REFER TO THE GROUP LOADS AS GIVEN IN THE AASHTO LRFD GUIDE SPECIFICATIONS.

DIMENSIONS: WHEN DECIMAL DIMENSIONS ARE GIVEN TO LESS THAN THREE DECIMAL PLACES, THE OMITTED DIGITS SHALL BE ASSUMED TO BE ZEROS.

COMPOSITE CONSTRUCTION: NO TEMPORARY INTERMEDIATE SUPPORTS SHALL BE USED DURING THE PLACING AND SETTING OF THE CONCRETE DECK.

CLASS "A" CONCRETE: CLASS "A" CONCRETE SHALL BE USED FOR CAST-IN-PLACE ABUTMENT FOOTINGS.

CLASS "F" CONCRETE: UNLESS NOTED OTHERWISE, CLASS "F" CONCRETE SHALL BE USED FOR BRIDGE DECKS INCLUDING PARAPETS AND SIDEWALKS, PEDESTALS, KEEPER BLOCKS, AND CAST-IN-PLACE VOID INFILL IN PRECAST SUBSTRUCTURE ELEMENTS.

HIGH EARLY STRENGTH CONCRETE: HIGH EARLY STRENGTH CONCRETE SHALL BE USED FOR CAST-IN-PLACE WINGWALL PARAPETS, BRIDGE DECK CLOSURE POURS, PARAPETS CLOSURE POURS, AND PRECAST APPROACH SLAB CLOSURE POURS.

PRECAST SUBSTRUCTURE ELEMENTS: SEE SPECIAL PROVISIONS FOR PRECAST SUBSTRUCTURE ELEMENT CONCRETE REQUIREMENTS.

JOINT SEAL: SEE SPECIAL PROVISIONS.

EXPOSED EDGES: EXPOSED EDGES OF CONCRETE SHALL BE BEVELED 1" x 1" UNLESS DIMENSIONED OTHERWISE.

CONCRETE COVER: ALL REINFORCEMENT SHALL HAVE TWO INCHES COVER UNLESS DIMENSIONED OTHERWISE.

REINFORCEMENT: ALL REINFORCEMENT SHALL BE ASTM A615 GRADE 60.

EPOXY COATED REINFORCING BARS: ALL REINFORCEMENT IN THE SUPERSTRUCTURE INCLUDING THE CONCRETE DECK AND THE PARAPETS SHALL BE EPOXY COATED UNLESS OTHERWISE NOTED. ALL REINFORCEMENT IN THE PEDESTALS SHALL BE EPOXY COATED. THESE BARS SHALL BE INCLUDED IN THE PAY ITEM FOR "DEFORMED STEEL BARS (EPOXY COATED)."

CONTROLLED DENSITY FILL: THE MINIMUM THICKNESS OF ALL CONTROLLED DENSITY FILL SHALL BE AS DETERMINED BY THE CONTRACTOR'S MIX DESIGN. THE MAXIMUM THICKNESS SHALL BE 3".

PREFORMED EXPANSION JOINT FILLER: THE COST OF FURNISHING AND INSTALLING PREFORMED EXPANSION JOINT FILLER SHALL BE INCLUDED IN THE COST OF THE ITEM "1" PREFORMED EXPANSION JOINT FILLER FOR BRIDGES".

CLOSED CELL ELASTOMER: THE COST OF FURNISHING AND INSTALLING CLOSED CELL ELASTOMER SHALL BE INCLUDED IN THE COST OF THE ITEM "CLASS 'F' CONCRETE".

CONSTRUCTION JOINTS: CONSTRUCTION JOINTS, OTHER THAN THOSE SHOWN ON THE PLANS, WILL NOT BE PERMITTED WITHOUT THE PRIOR APPROVAL OF THE ENGINEER.

TRAFFIC: ALL WORK SHALL BE DONE IN ACCORDANCE WITH THE SPECIAL PROVISIONS "MAINTENANCE AND PROTECTION OF TRAFFIC".

BRIDGE IDENTIFICATION: FOR THIS CONTRACT, THE BRIDGES SHALL BE IDENTIFIED AS FOLLOWS:

BRIDGE	SITE NO.
03163	1
03164	2

BRIDGE IDENTIFICATION PLACARDS: THE CONTRACTOR SHALL PROVIDE AND INSTALL NEW BRIDGE IDENTIFICATION SIGNS AT THE LEADING END OF EACH BRIDGE PARAPET ON THE TRAFFIC SIDE. THE SIGNS SHALL BE FABRICATED WITH 40 GAUGE ALUMINUM SHEET METAL. THE SIGNS SHALL BE 4" x 12" WITH 3" WHITE REFLECTIVE BLOCK LETTERS ON GREEN REFLECTIVE SHEETING. EACH SIGN SHALL READ: "03163" OR "03164" AS APPLICABLE. ALL COSTS ASSOCIATED WITH PROVIDING AND INSTALLING THE BRIDGE SIGNS SHALL BE COVERED UNDER THE ITEM "SIGN FACE SHEET ALUMINUM (TYPE III REFLECTIVE SHEETING)." THE FINAL LOCATION AND ATTACHMENT METHOD FOR THE SIGNS SHALL BE APPROVED BY THE ENGINEER PRIOR TO INSTALLATION.

TABLE OF BRIDGE QUANTITIES

ITEM	UNIT	QUANTITY
CONSTRUCTION ACCESS	LS	LS
STRUCTURE EXCAVATION - EARTH (COMPLETE)	CY	807
STRUCTURE EXCAVATION - ROCK (COMPLETE)	CY	3223
COMPACTED GRANULAR FILL	CY	1606
PERVIOUS STRUCTURE BACKFILL	CY	4837
HMA S0.5	TON	160
HMA S0.25	TON	80
REMOVAL OF SUPERSTRUCTURE (SITE NO. 1)	LS	LS
REMOVAL OF SUPERSTRUCTURE (SITE NO. 2)	LS	LS
SHEAR CONNECTORS (SITE NO. 1)	EA	2130
SHEAR CONNECTORS (SITE NO. 2)	EA	2130
1-1/2" POLYVINYL CHLORIDE PLASTIC PIPE	LF	34
ASPHALTIC PLUG EXPANSION JOINT SYSTEM	CF	62
STEEL-LAMINATED ELASTOMERIC BEARINGS	EA	20
CLASS "A" CONCRETE	CY	544
PRECAST APPROACH SLAB	SY	320
HIGH EARLY STRENGTH CONCRETE	CY	334
CLASS "F" CONCRETE	CY	707
PRECAST SUBSTRUCTURE ELEMENTS	CY	1377
1" PREFORMED EXPANSION JOINT FILLER FOR BRIDGES	SF	772
1½" PREFORMED EXPANSION JOINT FILLER FOR BRIDGES	SF	266
DEFORMED STEEL BARS	LB	34600
DEFORMED STEEL BARS - EPOXY COATED	LB	88500
STRUCTURAL STEEL (SITE NO. 1)	LS	LS
STRUCTURAL STEEL (SITE NO. 2)	LS	LS
TEMPORARY SUPPORT SYSTEM (SITE NO. 1)	LS	LS
TEMPORARY SUPPORT SYSTEM (SITE NO. 2)	LS	LS
ERECTION EQUIPMENT - COMPLETE	LS	LS
MEMBRANE WATERPROOFING (COLD LIQUID ELASTOMERIC)	SY	1400
DAMPPROOFING	SY	1342
PROTECTIVE FENCE (6' HIGH)	LF	922
REMOVAL OF EXISTING MASONRY	CY	722
INSTALLATION AND REMOVAL OF FIRE ALARM CABLE	LS	LS
SIGN FACE - SHEET ALUMINUM (TYPE III REFLECTIVE SHEETING)	SF	1
FIRE SUPPRESSION STANDPIPE SYSTEM	EA	2

CONCRETE PAY ITEMS

ELEMENT	PAY ITEM
PRECAST ABUTMENT AND WINGWALL FOOTINGS	PRECAST SUBSTRUCTURE ELEMENTS
C.I.P. ABUTMENT AND WINGWALL FOOTINGS	CLASS "A" CONCRETE
PRECAST ABUTMENT AND WINGWALL STEMS	PRECAST SUBSTRUCTURE ELEMENTS
C.I.P. FOOTING STEPS	HIGH EARLY STRENGTH CONCRETE
C.I.P. CONCRETE AT STEM VOIDS	CLASS "F" CONCRETE
PRECAST ABUTMENT BRIDGE SEAT/WALL CAPS	PRECAST SUBSTRUCTURE ELEMENTS
C.I.P. PEDESTALS AND CHEEKWALLS	CLASS "F" CONCRETE
PRECAST BACKWALLS	PRECAST SUBSTRUCTURE ELEMENTS
C.I.P. DECK, PARAPETS, SIDEWALK	CLASS "F" CONCRETE
DECK CLOSURE POURS	HIGH EARLY STRENGTH CONCRETE
C.I.P. WINGWALL PARAPETS AND SIDEWALK	HIGH EARLY STRENGTH CONCRETE
PARAPET CLOSURE POURS	HIGH EARLY STRENGTH CONCRETE
PRECAST SLEEPER SLABS	PRECAST APPROACH SLABS
PRECAST APPROACH SLABS	PRECAST APPROACH SLABS
APPROACH SLAB CLOSURE POURS	HIGH EARLY STRENGTH CONCRETE

Andrew Lessard
2017.10.31
15:00:15-04'00'

ADDENDUM NO. 1

REV.	DATE	REVISION DESCRIPTION	SHEET NO.
-	-	-	-
-	-	-	-
-	-	-	-
-	-	-	-
-	-	-	-
1	11/01/17	ADDED AASHTO M270 GRADE 50W	04.03.A1

THE INFORMATION, INCLUDING ESTIMATED QUANTITIES OF WORK, SHOWN ON THESE SHEETS IS BASED ON LIMITED INVESTIGATIONS BY THE STATE AND IS IN NO WAY WARRANTED TO INDICATE THE CONDITIONS OF ACTUAL QUANTITIES OF WORK WHICH WILL BE REQUIRED.

Plotted Date: 10/31/2017

DESIGNER/DRAFTER: JMB
CHECKED BY: AML
SCALE AS NOTED

STATE OF CONNECTICUT
DEPARTMENT OF TRANSPORTATION

Filename: ...\S-03 GENERAL NOTES AND QUANTITIES_A1.dgn

SIGNATURE/BLOCK:
Stantec Consulting Services Inc.
55 Church Street
Suite 601
New Haven, CT 06510

PROJECT TITLE:
REPLACEMENT OF BRIDGES 03163 & 03164 ROUTE 160 OVER I-91

TOWN: **ROCKY HILL**

DRAWING TITLE: **GENERAL NOTES & QUANTITIES**

PROJECT NO. 118-169
DRAWING NO. S-03
SHEET NO. 04.03.A1

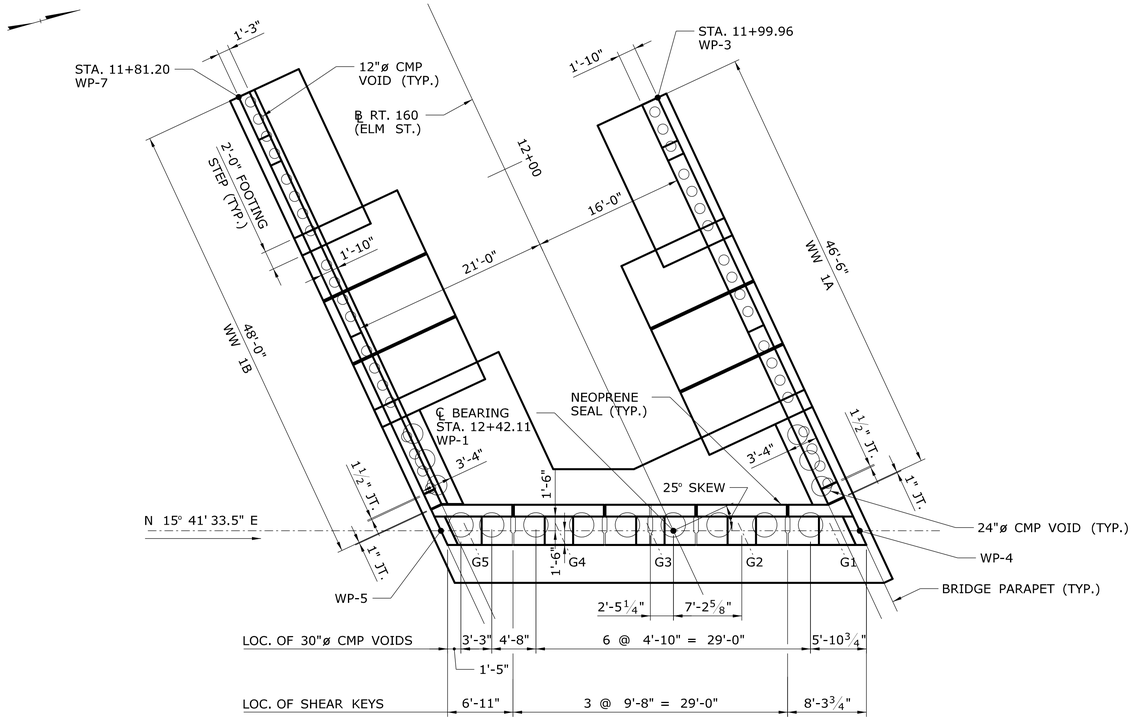

ABUTMENT 1 PLAN

SCALE: ⅛" = 1'-0"

PEDESTAL ELEVATIONS	
LOCATION	ELEVATION
G1	197.51
G2	197.44
G3	197.31
G4	196.97
G5	196.64

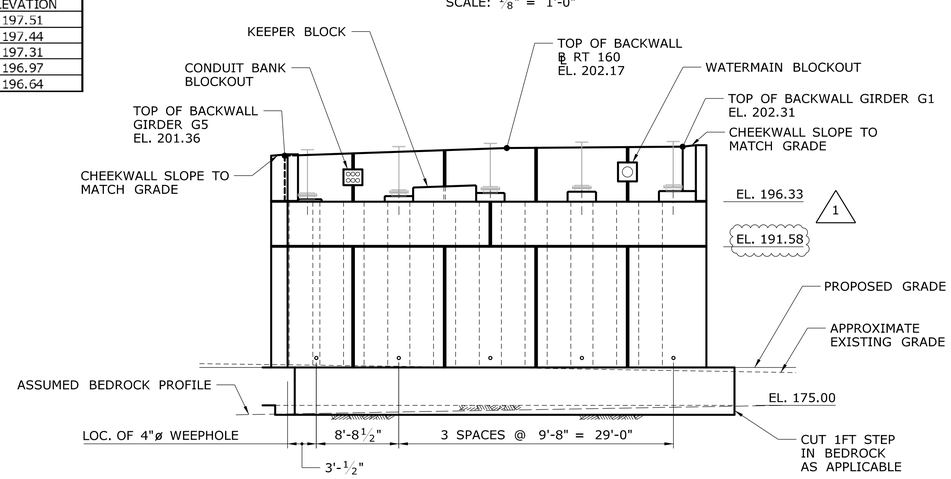

ABUTMENT 1 ELEVATION

SCALE: ⅛" = 1'-0"

NOTE: PROTECTIVE FENCE
NOT SHOWN

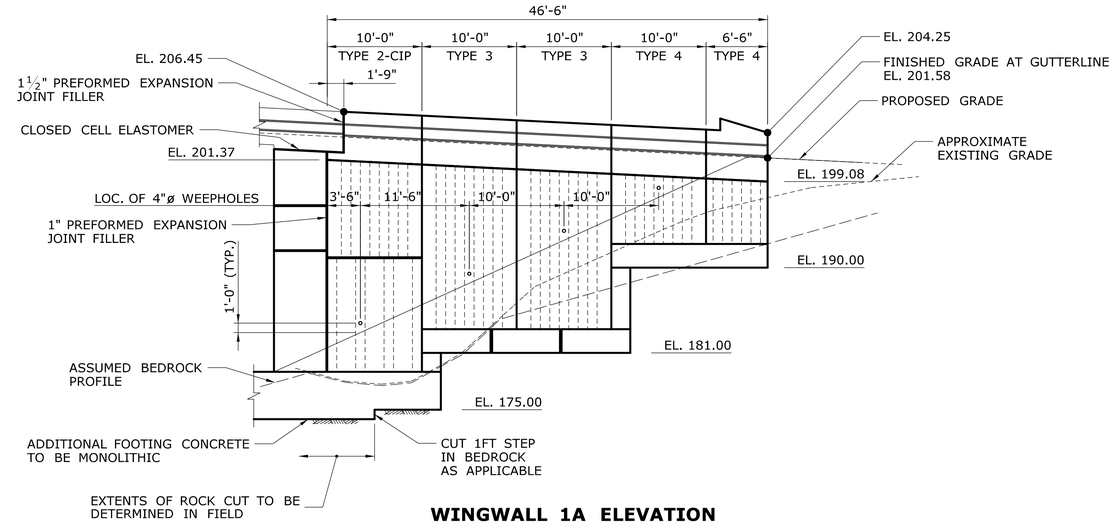

WINGWALL 1A ELEVATION

SCALE: ⅛" = 1'-0"

NOTE: PROTECTIVE FENCE
NOT SHOWN

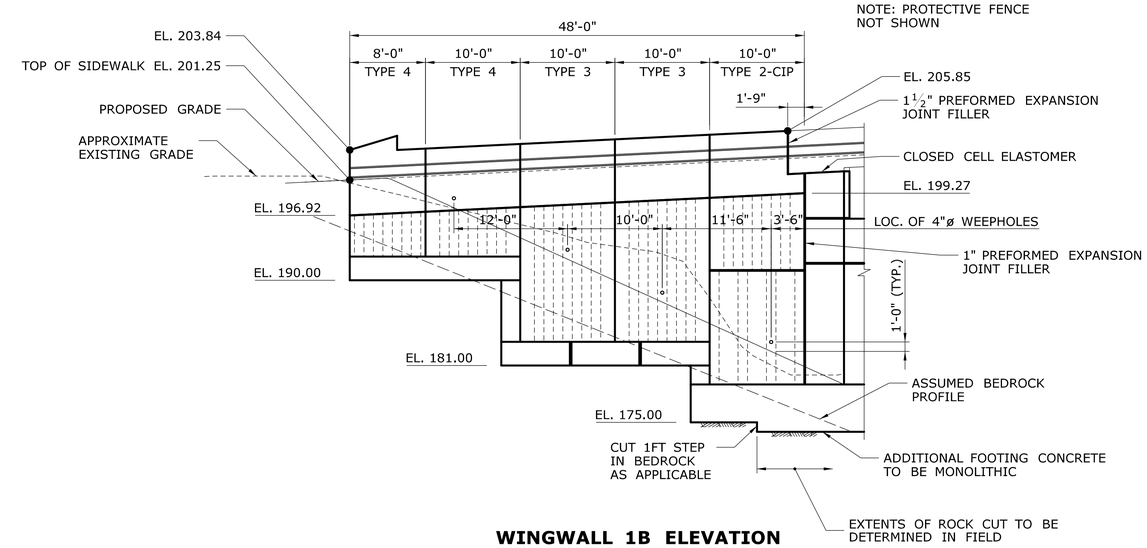

WINGWALL 1B ELEVATION

SCALE: ⅛" = 1'-0"

ADDENDUM NO. 1

REV.	DATE	REVISION DESCRIPTION	SHEET NO.
-	-	-	-
-	-	-	-
-	-	-	-
-	-	-	-
-	-	-	-
1	11/01/17	ADDED ABUTMENT STEM ELEVATION	04.08.A1

THE INFORMATION, INCLUDING ESTIMATED QUANTITIES OF WORK, SHOWN ON THESE SHEETS IS BASED ON LIMITED INVESTIGATIONS BY THE STATE AND IS IN NO WAY WARRANTED TO INDICATE THE CONDITIONS OF ACTUAL QUANTITIES OF WORK WHICH WILL BE REQUIRED.

Plotted Date: 10/31/2017

DESIGNER/DRAFTER: JRA
CHECKED BY: AML
SCALE AS NOTED

STATE OF CONNECTICUT
DEPARTMENT OF TRANSPORTATION

Filename: ...\S-08 03163 - ABUTMENT 1_A1.dgn

SIGNATURE/BLOCK:

Stantec Consulting Services Inc.
55 Church Street
Suite 601
New Haven, CT 06510

PROJECT TITLE:
REPLACEMENT OF BRIDGES 03163 & 03164 ROUTE 160 OVER I-91

TOWN: **ROCKY HILL**

DRAWING TITLE: **BRIDGE 03163 ABUTMENT 1**

PROJECT NO. 118-169
DRAWING NO. S-08
SHEET NO. 04.08.A1

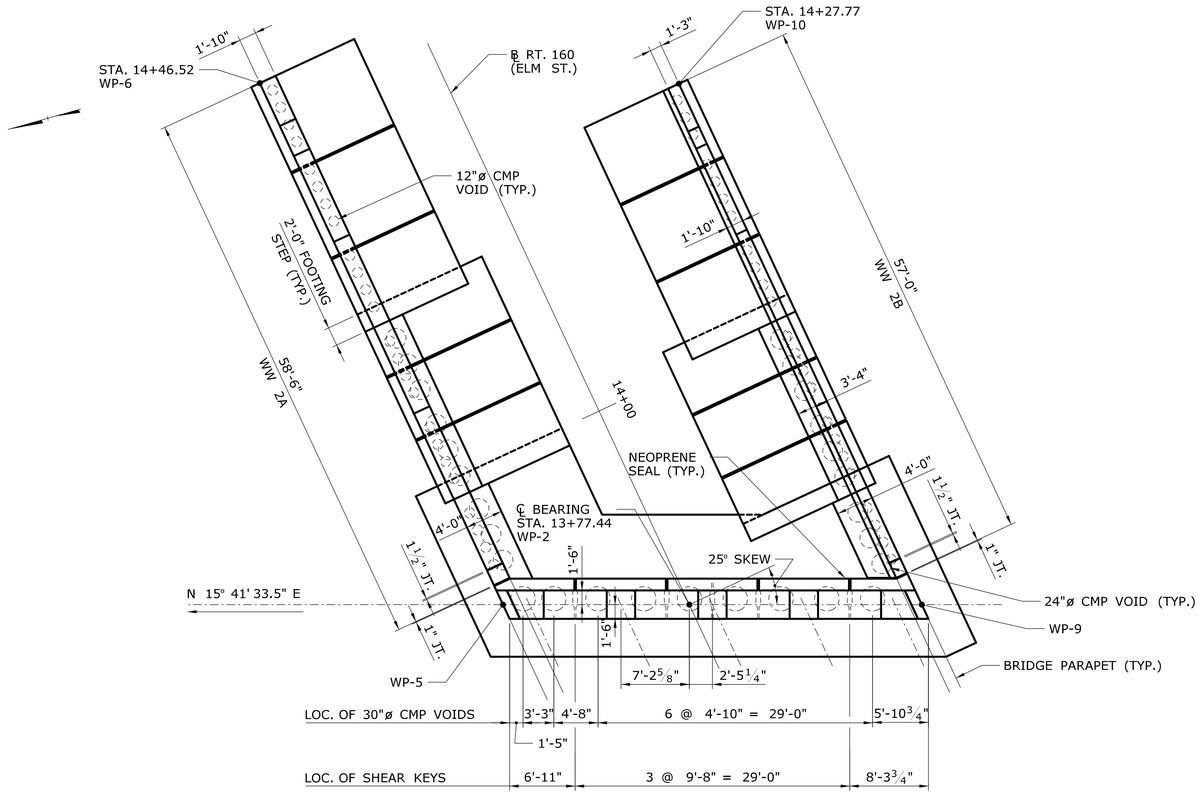

ABUTMENT 2 PLAN

SCALE: ⅛" = 1'-0"

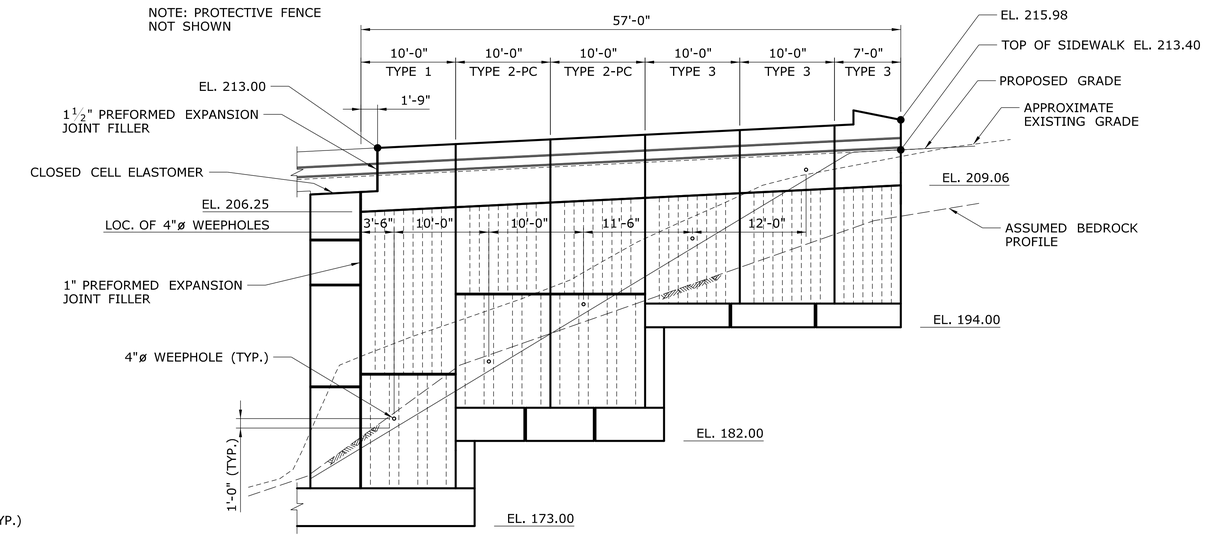

WW2B ELEVATION

SCALE: ⅛" = 1'-0"

PEDESTAL ELEVATIONS	
LOCATION	ELEVATION
G1	204.18
G2	204.11
G3	203.98
G4	203.65
G5	203.31

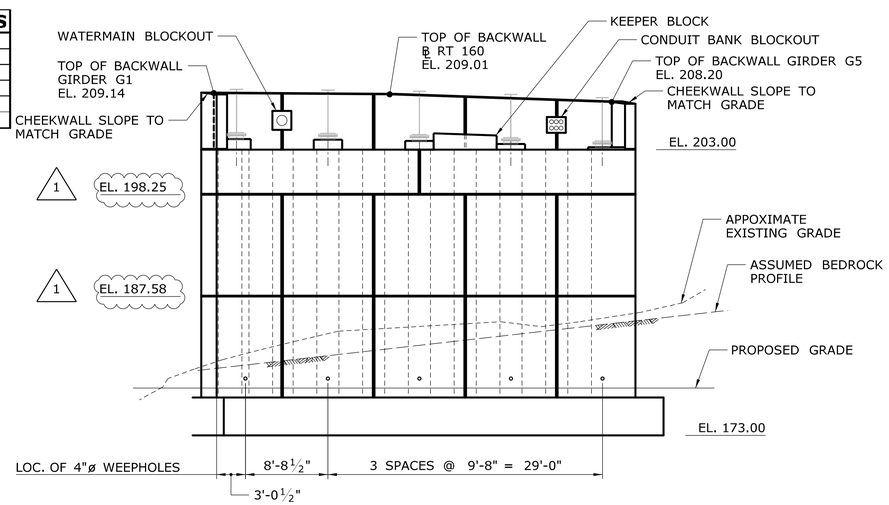

ABUTMENT 2 ELEVATION

SCALE: ⅛" = 1'-0"

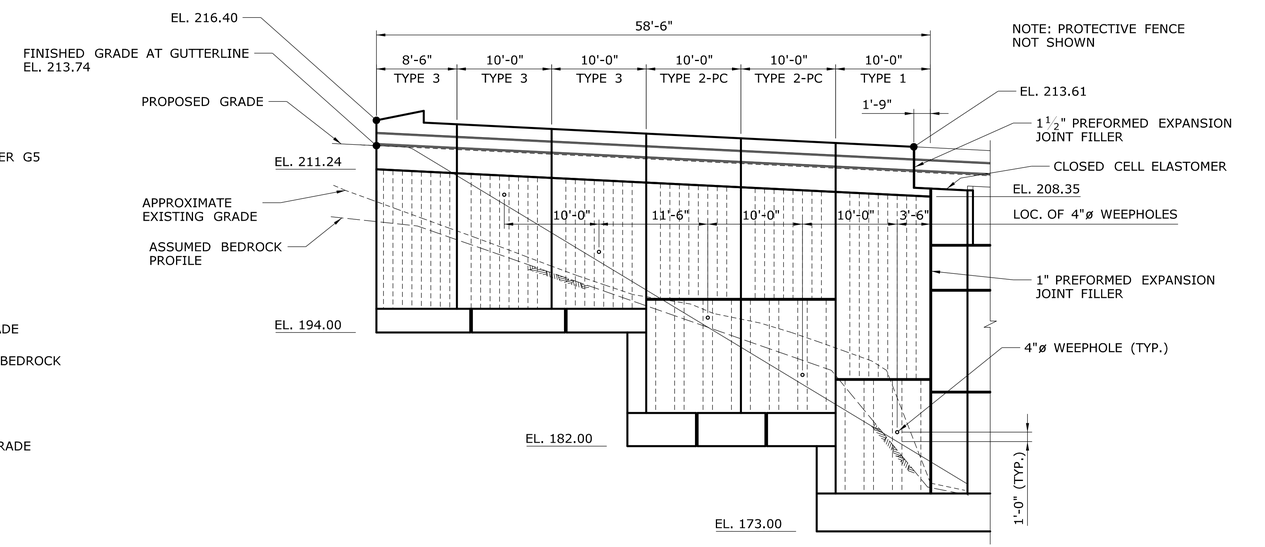

WW2A ELEVATION

SCALE: ⅛" = 1'-0"

ADDENDUM NO. 1

REV.	DATE	REVISION DESCRIPTION	SHEET NO.
-	-	-	-
-	-	-	-
-	-	-	-
-	-	-	-
-	-	-	-
1	11/01/17	ADDED ABUTMENT STEM ELEVATIONS	04.09.A1

THE INFORMATION, INCLUDING ESTIMATED QUANTITIES OF WORK, SHOWN ON THESE SHEETS IS BASED ON LIMITED INVESTIGATIONS BY THE STATE AND IS IN NO WAY WARRANTED TO INDICATE THE CONDITIONS OF ACTUAL QUANTITIES OF WORK WHICH WILL BE REQUIRED.

Plotted Date: 10/31/2017

DESIGNER/DRAFTER: **JRA**

CHECKED BY: **AML**

SCALE AS NOTED

STATE OF CONNECTICUT
DEPARTMENT OF TRANSPORTATION

Filename: ...\S-09 03163 - ABUTMENT 2_A1.dgn

SIGNATURE/BLOCK:

Stantec Consulting Services Inc.
55 Church Street
Suite 601
New Haven, CT 06510

PROJECT TITLE:

REPLACEMENT OF BRIDGES 03163 & 03164 ROUTE 160 OVER I-91

TOWN: **ROCKY HILL**

DRAWING TITLE: **BRIDGE 03163 ABUTMENT 2**

PROJECT NO. **118-169**

DRAWING NO. **S-09**

SHEET NO. **04.09.A1**

LEGEND:

CAST-IN-PLACE CONCRETE

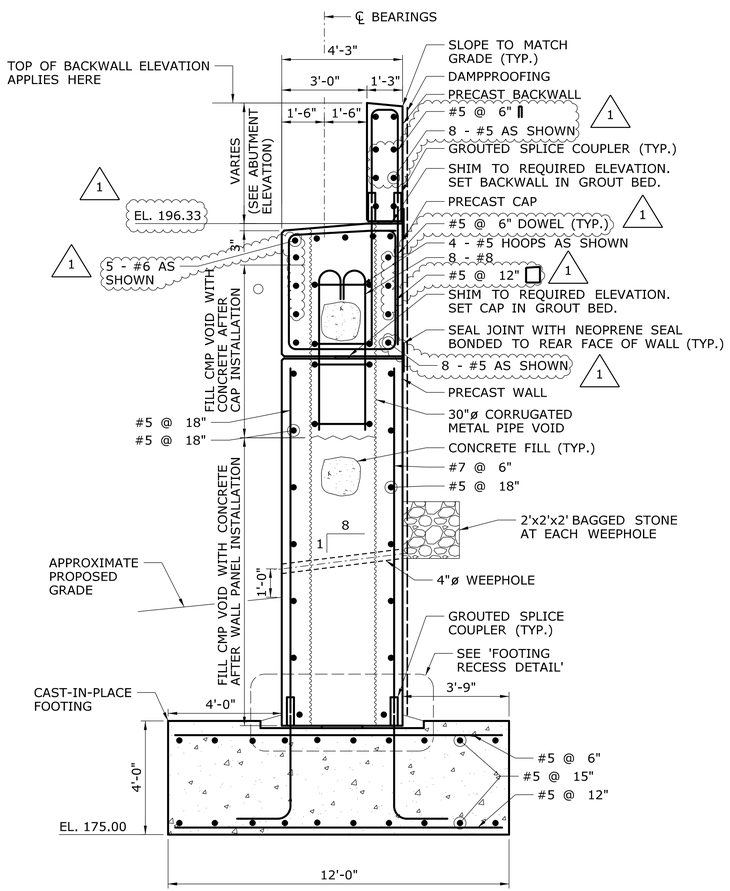

ABUTMENT 1 TYPICAL SECTION

SCALE: $\frac{3}{8}$" = 1'-0"

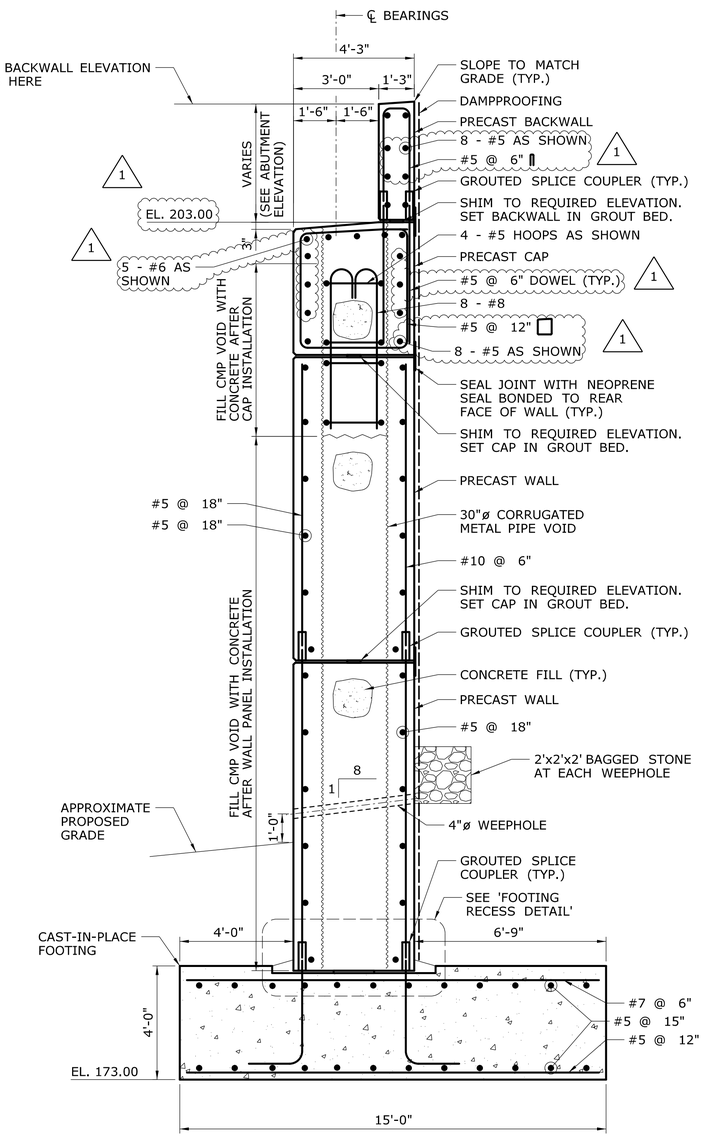

ABUTMENT 2 TYPICAL SECTION

SCALE: $\frac{3}{8}$" = 1'-0"

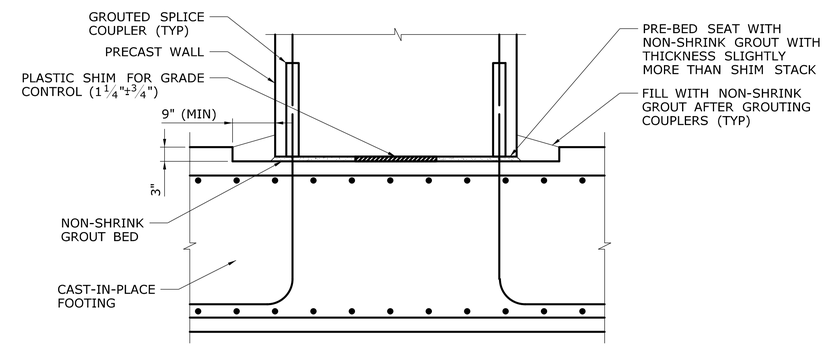

FOOTING RECESS DETAIL

NOT TO SCALE

SUGGESTED GROUTED SPLICE COUPLER CONNECTION SEQUENCE:

1. IT IS RECOMMENDED THAT THE GROUTING PROCEDURE BE COMPLETED IN THE PRESENCE OF A CONTRACTOR'S SUPERVISOR THAT IS EXPERIENCED IN THE INSTALLATION OF GROUTED SLEEVES. MANUFACTURER TRAINING MAY BE REQUIRED FOR INEXPERIENCED STAFF.
2. FOLLOW THE WRITTEN INSTALLATION PROCEDURES OF THE COUPLER MANUFACTURER. THE FOLLOWING ARE GENERAL PROCEDURES THAT APPLY TO MOST COUPLER MANUFACTURERS.
3. IT IS RECOMMENDED THAT THE ELEMENT WITH THE REINFORCEMENT BAR EXTENSIONS BE FABRICATED WITH EXTENDED LENGTHS.
4. SURVEY LOCATION AND ELEVATION OF LOWER ELEMENT.
5. DETERMINE THE REQUIRED REINFORCING BAR EXTENSION LENGTHS AND THE REQUIRED SHIM HEIGHTS BASED ON THE SURVEY.
6. CUT THE BAR EXTENSIONS TO THE REQUIRED LENGTH BASED ON THE SURVEY AND THE COUPLER MANUFACTUER'S RECOMMENDATIONS. FOR COATED BARS, THE ENDS OF THE BARS NEED NOT BE RE-COATED.
7. PRE-BED PRECAST COMPONENT WITH NON-SHRINK GROUT WITH THICKNESS MORE THAN SHIM STACK.
8. ERECT UPPER ELEMENT TO WITHIN THE SPECIFIED ERECTION TOLERANCES. PREVENT BEDDING GROUT FROM FLOWING INTO COUPLER.
9. MAINTAIN INTEGRITY OF GROUT BED DURING SETTING OPERATION. REPAIR GROUT THAT IS DISPLACED OR GAPS THAT DEVELOP IN THE GROUT JOINT USING HAND TOOLS.
10. BRACE THE UPPER ELEMENT.
11. INSTALL GROUT IN COUPLERS FOLLOWING THE MANUFACTURER'S WRITTEN PROCEDURES. IF THE COUPLER IS BELOW THE JOINT, THE COUPLER GROUT CAN BE INSTALLED PRIOR TO APPLICATION OF BEDDING GROUT.
12. ERECTION OF SUBSEQUENT ELEMENTS ABOVE A CONNECTION SHOULD NOT COMMENCE UNTIL THE CONNECTION HAS ACHIEVED ADEQUATE STRENGTH AS DETERMINED THROUGH STRENGTH TESTING OF THE GROUT. THE TIMING OF SUBSEQUENT CONSTRUCTION STEPS SHOULD BE SPECIFIED IN THE BRIDGE ASSEMBLY PLAN.

ADDENDUM NO. 1

REV.	DATE	REVISION DESCRIPTION	SHEET NO.
-	-	-	-
-	-	-	-
-	-	-	-
-	-	-	-
-	-	-	-
1	11/01/17	REBAR CALL-OUTS ADDED, ELEVATIONS UPDATED	04.10.A1

THE INFORMATION, INCLUDING ESTIMATED QUANTITIES OF WORK, SHOWN ON THESE SHEETS IS BASED ON LIMITED INVESTIGATIONS BY THE STATE AND IS IN NO WAY WARRANTED TO INDICATE THE CONDITIONS OF ACTUAL QUANTITIES OF WORK WHICH WILL BE REQUIRED.

Plotted Date: 10/31/2017

DESIGNER/DRAFTER: JRA
CHECKED BY: AML
SCALE AS NOTED

STATE OF CONNECTICUT
DEPARTMENT OF TRANSPORTATION

Filename: ...\S-10 03163 - ABUTMENT DETAILS - 1_A1.dgn

SIGNATURE/BLOCK:
Stantec Consulting Services Inc.
55 Church Street
Suite 601
New Haven, CT 06510

PROJECT TITLE:
REPLACEMENT OF BRIDGES 03163 & 03164 ROUTE 160 OVER I-91

TOWN: **ROCKY HILL**

DRAWING TITLE: **BRIDGE 03163 ABUTMENT DETAILS - 1**

PROJECT NO. **118-169**
DRAWING NO. **S-10**
SHEET NO. **04.10.A1**

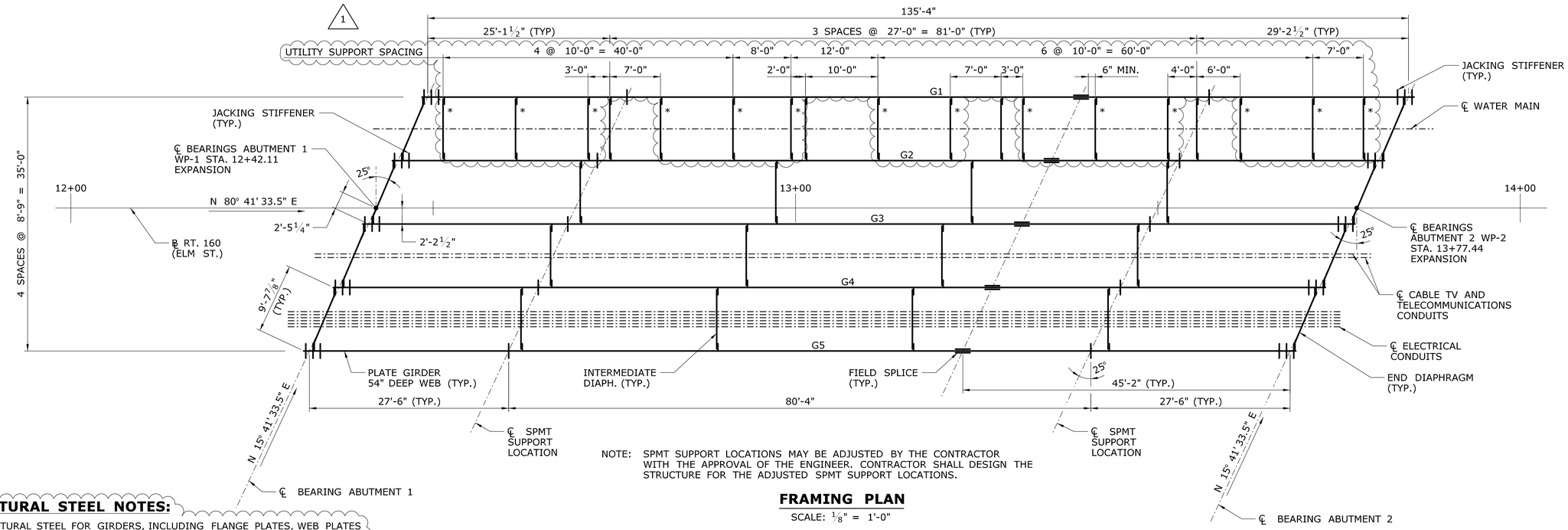

NOTE: SPMT SUPPORT LOCATIONS MAY BE ADJUSTED BY THE CONTRACTOR WITH THE APPROVAL OF THE ENGINEER. CONTRACTOR SHALL DESIGN THE STRUCTURE FOR THE ADJUSTED SPMT SUPPORT LOCATIONS.

FRAMING PLAN

SCALE: ⅛" = 1'-0"

NOTE: ALL INTERMEDIATE DIAPHRAGMS SIMILAR UNLESS NOTED THUSLY:
* = UTILITY SUPPORT DIAPHRAGM

STRUCTURAL STEEL NOTES:

1. STRUCTURAL STEEL FOR GIRDERS, INCLUDING FLANGE PLATES, WEB PLATES AND GIRDER FIELD SPLICE PLATES SHALL CONFORM TO AASHTO M270, GRADE HPS 70W.

   ALL OTHER STRUCTURAL STEEL, INCLUDING DIAPHRAGMS, CONNECTION PLATES, DRIP BARS AND BEARING STIFFENERS SHALL CONFORM TO AASHTO M270, GRADE 50W.
2. WELDING DETAILS, PROCEDURES AND TESTING METHODS SHALL CONFORM TO ANSI/AASHTO/AWS D1.5-2015 - BRIDGE WELDING CODE, UNLESS OTHERWISE NOTED.
3. BOLTED FIELD SPLICES, OTHER THAN THOSE INDICATED ON THE PLANS, WILL NOT BE ALLOWED EXCEPT WITH THE WRITTEN PERMISSION OF THE ENGINEER PRIOR TO SUBMISSION OF SHOP PLANS. IF ALLOWED, THESE SPLICES SHALL BE DESIGNED BY THE CONTRACTOR AND APPROVED BY THE ENGINEER. THE COST OF THESE SPLICES, INCLUDING THE COST OF DESIGN, SHALL BE AT NO EXTRA EXPENSE TO THE STATE.
4. ALL WEB TO FLANGE, WEB TO BEARING STIFFENER, WEB TO CONNECTION PLATE, AND BEARING STIFFENER TO FLANGE FILLET WELDS SHALL BE INSPECTED IN THEIR ENTIRETY BY THE MAGNETIC PARTICLE METHOD.
5. MULTIPLE PASS WELDS, INSPECTED BY THE MAGNETIC PARTICLE METHOD, SHALL HAVE EACH PASS OR LAYER INSPECTED AND ACCEPTED BEFORE PROCEEDING TO THE NEXT PASS OR LAYER, AS DETERMINED BY THE ENGINEER.
6. WELDED FLANGE SPLICES SHALL BE LOCATED A MINIMUM OF SIX INCHES FROM STIFFENERS, CONNECTION PLATES, AND WEB SPLICES.
7. WELDED WEB SPLICES SHALL BE LOCATED A MINIMUM OF SIX INCHES FROM STIFFENERS, CONNECTION PLATES, AND FLANGE SPLICES.
8. BEARING STIFFENERS, JACKING STIFFENERS, CONNECTION PLATES AND THE ENDS OF GIRDERS SHALL BE VERTICAL AFTER THE APPLICATION OF FULL DEAD LOADS.
9. THE STRUCTURAL STEEL FABRICATOR SHALL BE CERTIFIED UNDER THE AISC QUALITY CONTROL PROGRAM AS NOTED BELOW:

   CATEGORY MBr - MAJOR STEEL BRIDGES
10. THE CONTRACTOR SHALL TAKE PROPER PRECAUTIONS TO INSURE THE STABILITY OF ALL STRUCTURAL ELEMENTS UNTIL THE TOTAL STRUCTURE IS IN BEING.
11. IT SHALL BE THE CONTRACTOR'S RESPONSIBILITY TO PROVIDE ANY ADDITIONAL TEMPORARY BRACING REQUIRED TO MAINTAIN THE GEOMETRY OF THE INDIVIDUAL PLATE GIRDERS, AS WELL AS THE TOTAL STEEL STRUCTURE, THROUGHOUT ALL PHASES OF CONSTRUCTION INCLUDING PLACEMENT OF THE CONCRETE DECK.
12. THE COST OF THE TEMPORARY SHORING WILL NOT BE MEASURED FOR PAYMENT, THE COST OF WHICH SHALL BE INCLUDED IN THE ITEM "STRUCTURAL STEEL (SITE NO. 1)".
13. SHOP WELD SPLICES SHALL BE LOCATED WITHIN THE MIDDLE THIRD OF THE SPAN.

BRIDGE 03163 - CAMBER TABLE (FEET)

		ABUT. 1	L/12	2L/12	3L/12	4L/12	5L/12	6L/12	7L/12	8L/12	9L/12	10L/12	11L/12	ABUT. 2
G1, G5	STEEL DEFLECTION	0.000	0.057	0.103	0.140	0.165	0.181	0.186	0.181	0.165	0.140	0.103	0.057	0.000
	ADDITIONAL DL DEFLECTION	0.000	0.134	0.243	0.328	0.389	0.425	0.437	0.425	0.389	0.328	0.243	0.134	0.000
	COMPOSITE DL DEFLECTION	0.000	0.059	0.107	0.145	0.172	0.188	0.193	0.188	0.172	0.145	0.107	0.059	0.000
	EXTRA CAMBER	0.000	0.034	0.063	0.085	0.100	0.110	0.113	0.110	0.100	0.085	0.063	0.034	0.000
	VERTICAL CURVE ORDINATE	0.000	0.000	0.000	0.000	0.000	0.000	0.000	0.000	0.000	0.000	0.000	0.000	0.000
	TOTAL CAMBER	0.000	0.284	0.517	0.697	0.826	0.904	0.930	0.904	0.826	0.697	0.517	0.284	0.000
G2-G4	STEEL DEFLECTION	0.000	0.060	0.108	0.146	0.174	0.190	0.195	0.190	0.174	0.146	0.108	0.060	0.000
	ADDITIONAL DL DEFLECTION	0.000	0.168	0.305	0.411	0.488	0.533	0.549	0.533	0.488	0.411	0.305	0.168	0.000
	COMPOSITE DL DEFLECTION	0.000	0.055	0.099	0.134	0.159	0.174	0.179	0.174	0.159	0.134	0.099	0.055	0.000
	EXTRA CAMBER	0.000	0.034	0.063	0.085	0.100	0.110	0.113	0.110	0.100	0.085	0.063	0.034	0.000
	VERTICAL CURVE ORDINATE	0.000	0.000	0.000	0.000	0.000	0.000	0.000	0.000	0.000	0.000	0.000	0.000	0.000
	TOTAL CAMBER	0.000	0.316	0.575	0.777	0.921	1.007	1.036	1.007	0.921	0.777	0.575	0.316	0.000

ADDENDUM NO. 1

REV.	DATE	REVISION DESCRIPTION	SHEET NO.
-	-	-	-
-	-	-	-
-	-	-	-
-	-	-	-
-	-	-	-
1	11/01/17	REVISED UTILITY DIAPHRAGM SPACING & NOTES	04.17.A1

THE INFORMATION, INCLUDING ESTIMATED QUANTITIES OF WORK, SHOWN ON THESE SHEETS IS BASED ON LIMITED INVESTIGATIONS BY THE STATE AND IS IN NO WAY WARRANTED TO INDICATE THE CONDITIONS OF ACTUAL QUANTITIES OF WORK WHICH WILL BE REQUIRED.

Plotted Date: 10/31/2017

DESIGNER/DRAFTER: JMB
CHECKED BY: AML
SCALE AS NOTED

STATE OF CONNECTICUT
DEPARTMENT OF TRANSPORTATION

Filename: ...\S-17 03163 - FRAMING PLAN.A1.dgn

SIGNATURE/BLOCK:
Stantec Consulting Services Inc.
55 Church Street
Suite 601
New Haven, CT 06510

PROJECT TITLE:
REPLACEMENT OF BRIDGES 03163 & 03164 ROUTE 160 OVER I-91

TOWN: **ROCKY HILL**

DRAWING TITLE: **BRIDGE 03163 FRAMING PLAN**

PROJECT NO. 118-169
DRAWING NO. S-17
SHEET NO. 04.17.A1

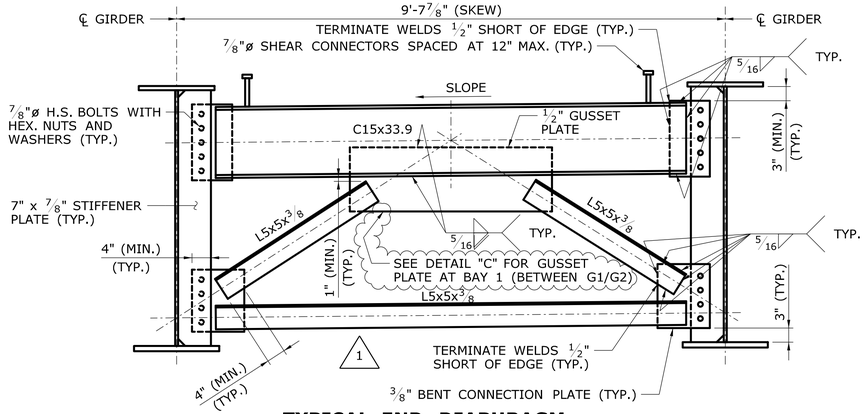

TYPICAL END DIAPHRAGM

SCALE: 3/4" = 1'-0"

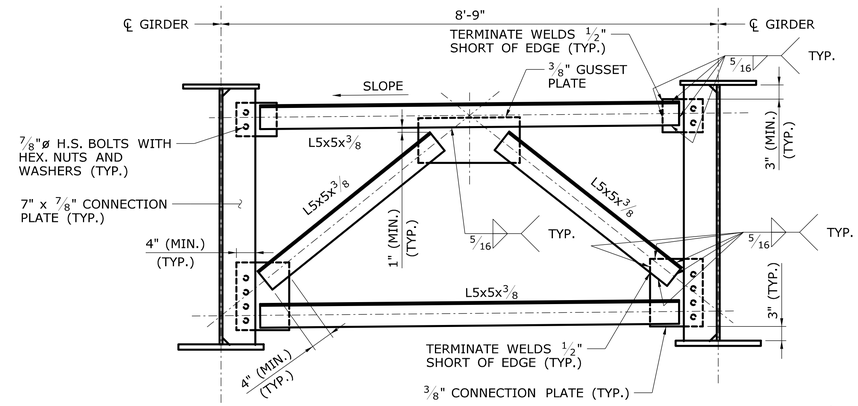

TYPICAL INTERMEDIATE DIAPHRAGM

SCALE: 3/4" = 1'-0"

NOTES:

1. BOLT HOLES IN CONNECTION PLATES AND GUSSET PLATES SHALL BE 15/16"ø (STANDARD) FOR 7/8"ø BOLTS. BOLT HOLES IN BEARING STIFFENER SHALL BE 1 1/16"ø (OVERSIZED).
2. CONNECTION PLATES AND GUSSET PLATES SHALL BE SQUARE OR RECTANGULAR.

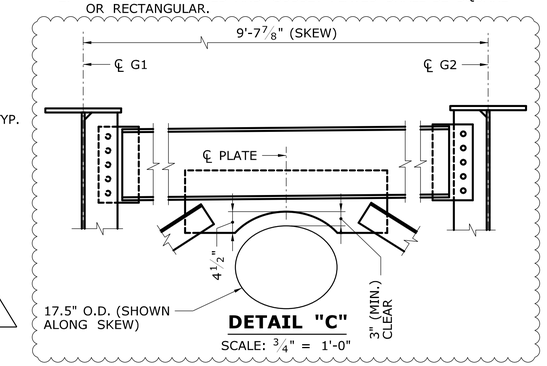

DETAIL "C"

SCALE: 3/4" = 1'-0"

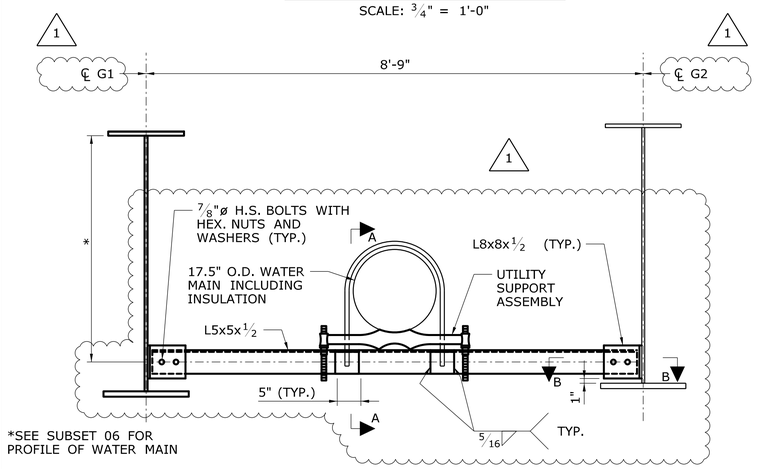

TYPICAL UTILITY SUPPORT DIAPHRAGM

SCALE: 3/4" = 1'-0"

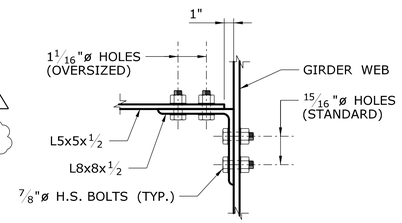

SECTION B-B

NOT TO SCALE

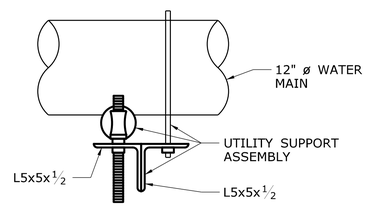

SECTION A-A

NOT TO SCALE

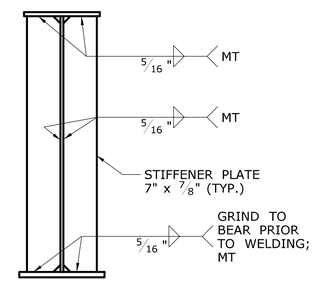

BEARING STIFFENER

NOT TO SCALE

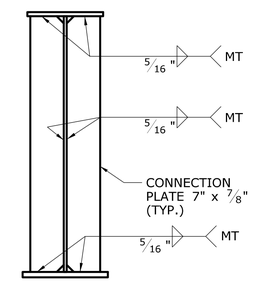

DIAPHRAGM CONNECTION PLATE

NOT TO SCALE

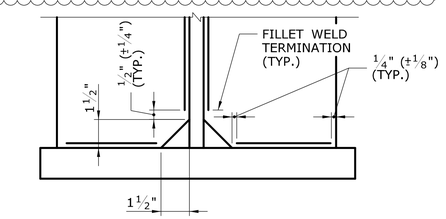

NOTE:
DETAILS ARE SHOWN FOR CONNECTION PLATE AND STIFFENER PLATES AT BOTTOM FLANGE, TOP FLANGE IS SIMILAR.

CLIP AND WELD TERMINATION DETAILS

NOT TO SCALE

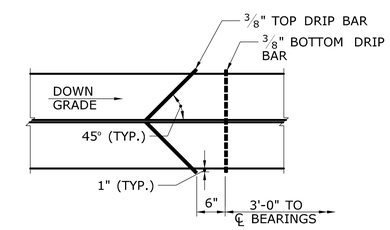

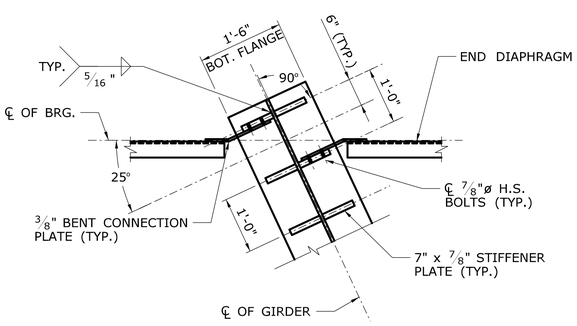

SECTION AT ABUTMENT 1 & 2

SCALE: 3/4" = 1'-0"

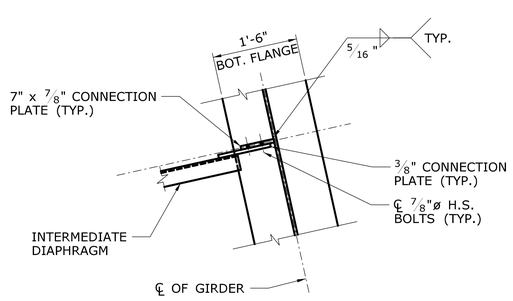

SECTION AT TYPICAL INTERMEDIATE DIAPHRAGM

SCALE: 3/4" = 1'-0"

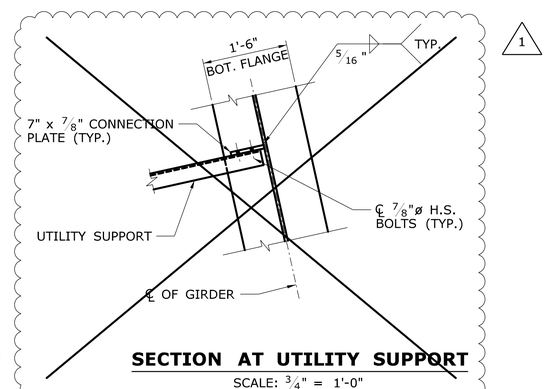

SECTION AT UTILITY SUPPORT

SCALE: 3/4" = 1'-0"

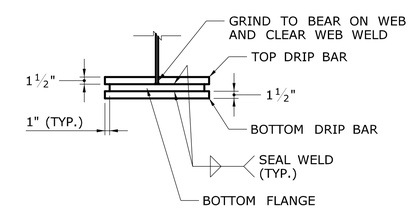

DRIP BAR DETAILS

NOT TO SCALE

ADDENDUM NO. 1

REV.	DATE	REVISION DESCRIPTION	SHEET NO.
-	-	-	-
-	-	-	-
-	-	-	-
-	-	-	-
-	-	-	-
1	11/01/17	REVISED DIAPHRAGMS FOR WATER MAIN	04.19.A1

THE INFORMATION, INCLUDING ESTIMATED QUANTITIES OF WORK, SHOWN ON THESE SHEETS IS BASED ON LIMITED INVESTIGATIONS BY THE STATE AND IS IN NO WAY WARRANTED TO INDICATE THE CONDITIONS OF ACTUAL QUANTITIES OF WORK WHICH WILL BE REQUIRED.

Plotted Date: 10/31/2017

DESIGNER/DRAFTER: JMB
CHECKED BY: AML
SCALE AS NOTED

STATE OF CONNECTICUT
DEPARTMENT OF TRANSPORTATION

Filename: ...\S-19 03163 - STEEL DETAILS - 2_A1.dgn

SIGNATURE/BLOCK:
Stantec Consulting Services Inc.
55 Church Street
Suite 601
New Haven, CT 06510

PROJECT TITLE:
REPLACEMENT OF BRIDGES 03163 & 03164 ROUTE 160 OVER I-91

TOWN: **ROCKY HILL**

DRAWING TITLE: **BRIDGE 03163 STEEL DETAILS - 2**

PROJECT NO. 118-169
DRAWING NO. S-19
SHEET NO. 04.19.A1

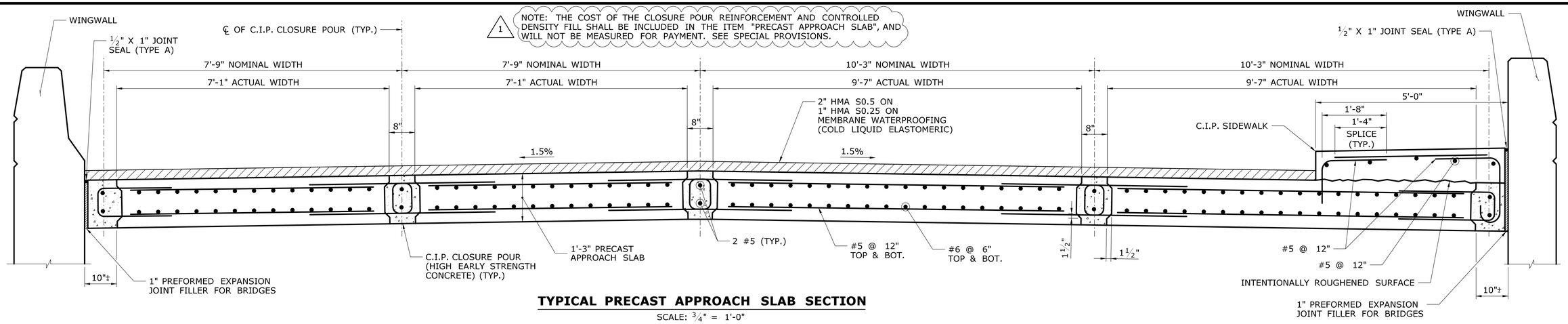

TYPICAL PRECAST APPROACH SLAB SECTION

SCALE: ¾" = 1'-0"

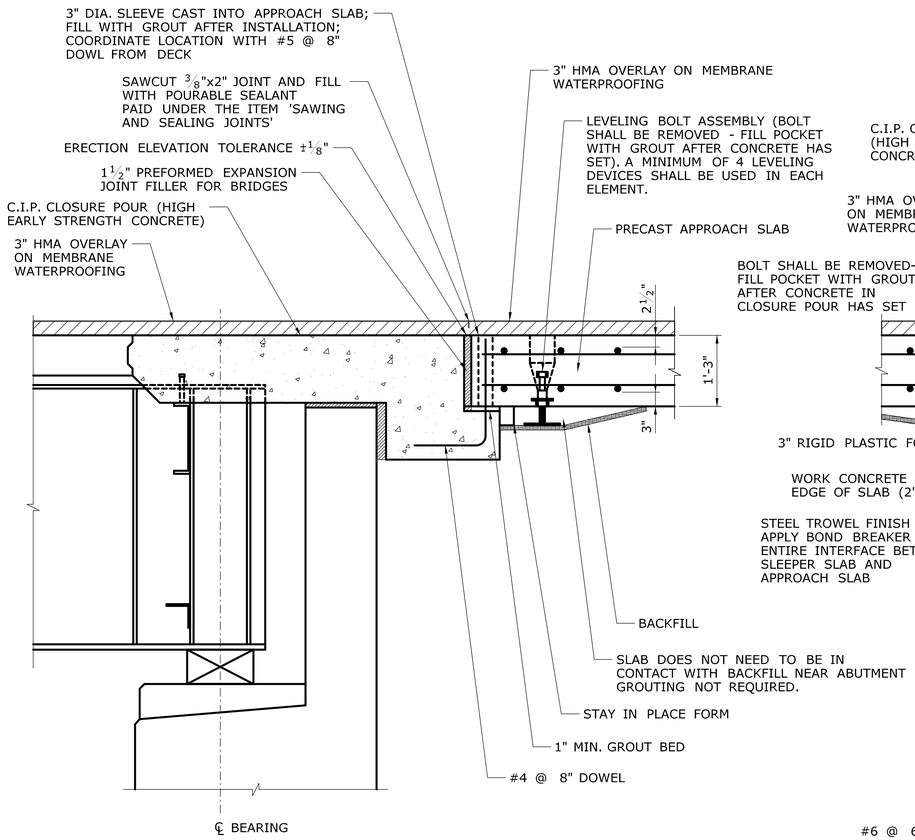

PRECAST APPROACH SLAB AT ABUTMENT

SCALE: ¾" = 1'-0"

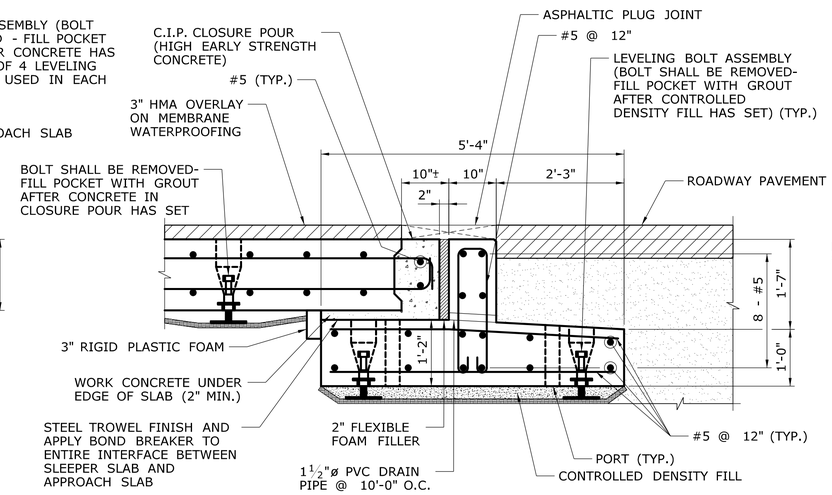

PRECAST APPROACH SLAB AT END

SCALE: ¾" = 1'-0"

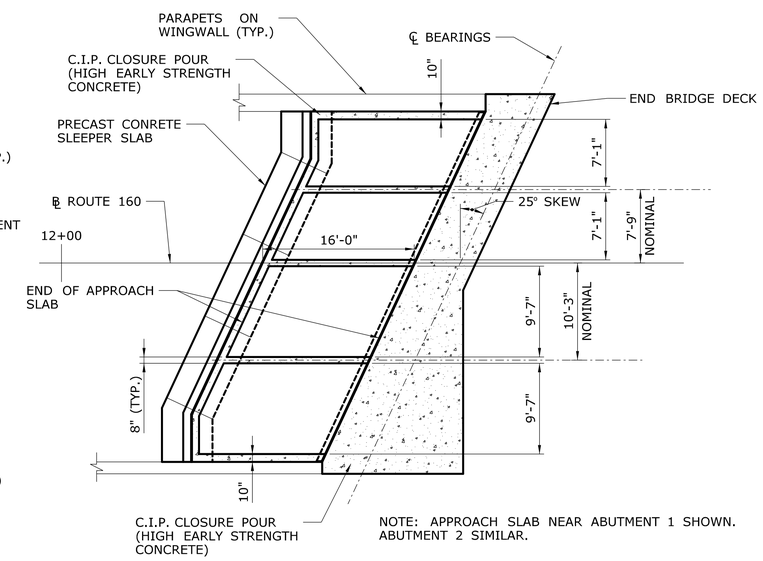

TYPICAL PRECAST APPROACH SLAB LAYOUT

SCALE: ⅛" = 1'-0"

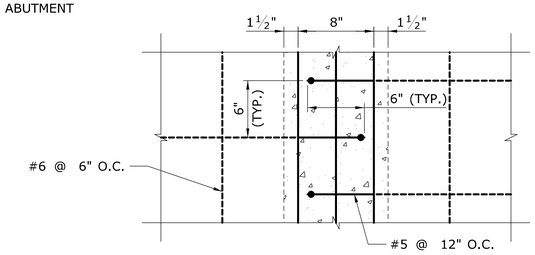

LONGITUDINAL C.I.P. CLOSURE POUR - ENLARGED PLAN

SCALE: 1½" = 1'-0"

THERMAL MOVEMENT	
LOCATION	MOVEMENT RANGE
ABUT. 1	1½"
ABUT. 2	1½"

PRECAST SLEEPER SLAB NOTES:

1. CONTRACTOR TO DETERMINE SIZE AND SPACING OF PORTS BASED ON CONTROLLED DENSITY FILL PROPERTIES.
2. EXCAVATION FOR SLEEPER SLABS SHALL BE CAREFULLY MADE AFTER COMPACTED ABUTMENT EMBANKMENT IS IN PLACE. THE SLEEPER SLABS SHALL BE FOUNDED ON UNDISTURBED COMPACT MATERIAL OR RE-COMPACTED MATERIAL. NO LOOSE BACKFILL SHALL BE ALLOWED. THE CONTRACTOR SHALL TAKE ALL NECESSARY PRECAUTIONS TO PROTECT THE SLEEPER SLAB FROM TEMPORARY LOADINGS OR ANY CONDITION WHICH COULD CAUSE MOVEMENTS OR UNEVEN SETTLEMENT OF THE SLEEPER SLAB.
3. A MINIMUM OF 4 LEVELING DEVICES SHALL BE USED IN EACH ELEMENT.

ADDENDUM NO. 1

REV.	DATE	REVISION DESCRIPTION	SHEET NO.
-	-	-	-
-	-	-	-
-	-	-	-
-	-	-	-
-	-	-	-
1	11/01/17	REVISED NOTE	04.23.A1

THE INFORMATION, INCLUDING ESTIMATED QUANTITIES OF WORK, SHOWN ON THESE SHEETS IS BASED ON LIMITED INVESTIGATIONS BY THE STATE AND IS IN NO WAY WARRANTED TO INDICATE THE CONDITIONS OF ACTUAL QUANTITIES OF WORK WHICH WILL BE REQUIRED.

Plotted Date: 10/31/2017

DESIGNER/DRAFTER: JJF
CHECKED BY: AML
SCALE AS NOTED

STATE OF CONNECTICUT
DEPARTMENT OF TRANSPORTATION

Filename: ...\S-23 03163 - APPROACH SLAB DETAILS_A1.dgn

SIGNATURE/BLOCK:
Stantec Consulting Services Inc.
55 Church Street
Suite 601
New Haven, CT 06510

PROJECT TITLE:
REPLACEMENT OF BRIDGES 03163 & 03164 ROUTE 160 OVER I-91

TOWN: **ROCKY HILL**

DRAWING TITLE: **BRIDGE 03163 APPROACH SLAB DETAILS**

PROJECT NO. 118-169
DRAWING NO. S-23
SHEET NO. 04.23.A1

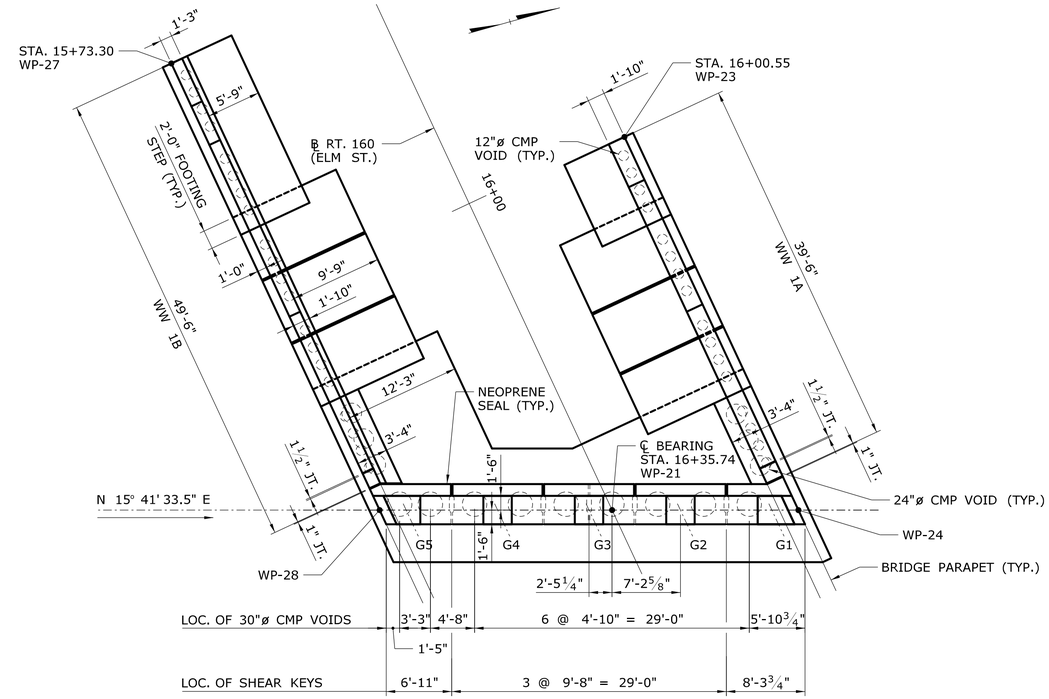

ABUTMENT 1 PLAN

SCALE: ⅛" = 1'-0"

PEDESTAL ELEVATIONS	
LOCATION	ELEVATION
G1	216.98
G2	216.92
G3	216.80
G4	216.48
G5	216.15

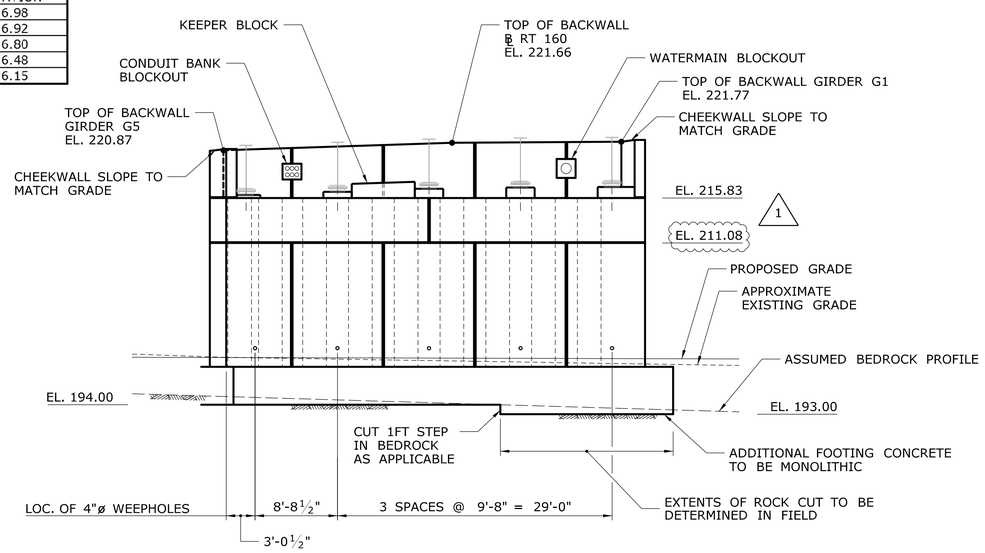

ABUTMENT 1 ELEVATION

SCALE: ⅛" = 1'-0"

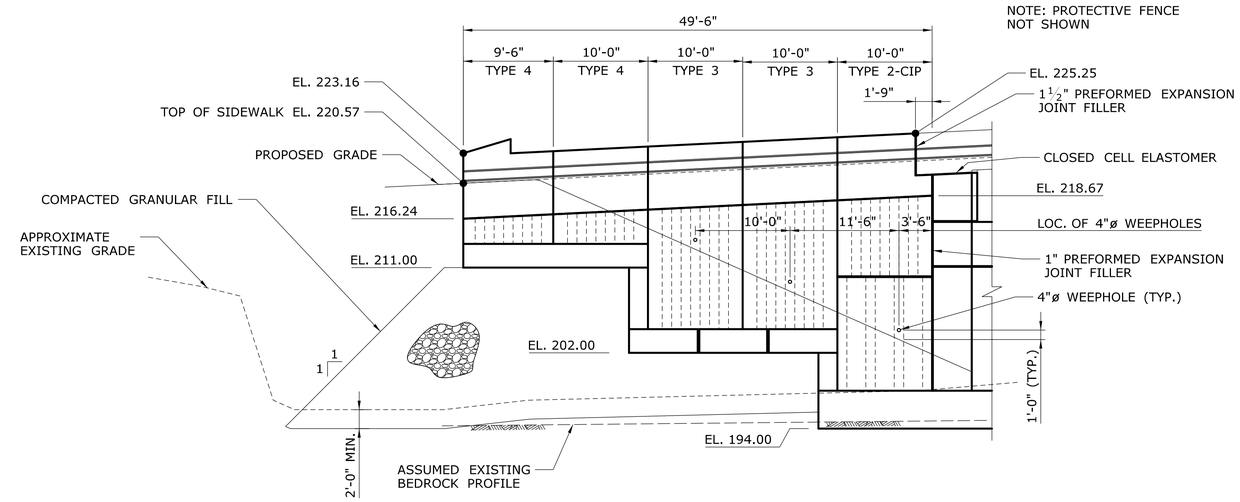

WINGWALL 1B ELEVATION

SCALE: ⅛" = 1'-0"

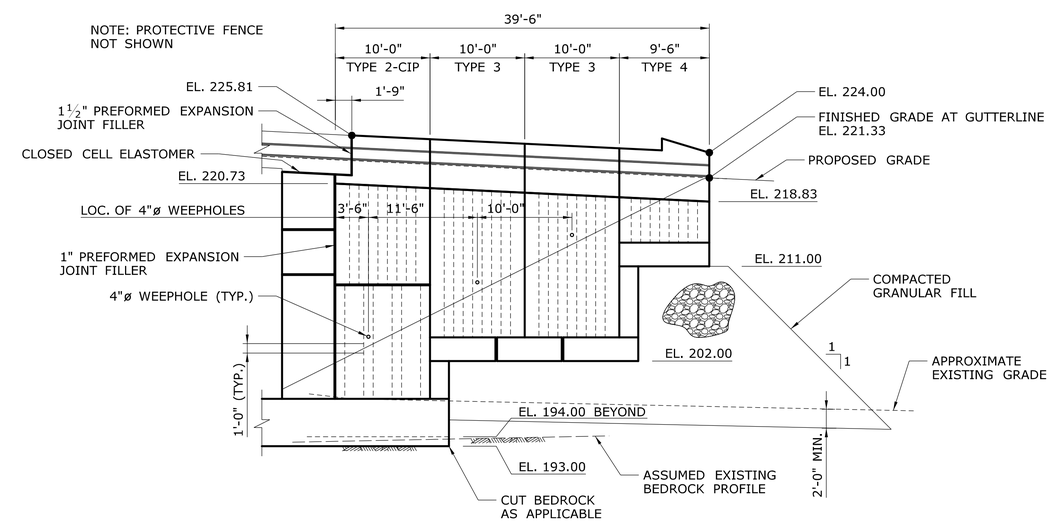

WINGWALL 1A ELEVATION

SCALE: ⅛" = 1'-0"

ADDENDUM NO. 1

REV.	DATE	REVISION DESCRIPTION	SHEET NO.
-	-	-	-
-	-	-	-
-	-	-	-
-	-	-	-
-	-	-	-
1	11/01/17	ADDED ABUTMENT STEM ELEVATION	04.27.A1

THE INFORMATION, INCLUDING ESTIMATED QUANTITIES OF WORK, SHOWN ON THESE SHEETS IS BASED ON LIMITED INVESTIGATIONS BY THE STATE AND IS IN NO WAY WARRANTED TO INDICATE THE CONDITIONS OF ACTUAL QUANTITIES OF WORK WHICH WILL BE REQUIRED.

Plotted Date: 10/31/2017

DESIGNER/DRAFTER: JRA
CHECKED BY: AML

STATE OF CONNECTICUT
DEPARTMENT OF TRANSPORTATION

Filename: ...\S-27 03164 - ABUTMENT 1_A1.dgn

SIGNATURE/BLOCK:
Stantec Consulting Services Inc.
55 Church Street
Suite 601
New Haven, CT 06510

PROJECT TITLE:
REPLACEMENT OF BRIDGES 03163 & 03164 ROUTE 160 OVER I-91

TOWN: **ROCKY HILL**

DRAWING TITLE: **BRIDGE 03164 ABUTMENT 1**

PROJECT NO. **118-169**
DRAWING NO. **S-27**
SHEET NO. **04.27.A1**

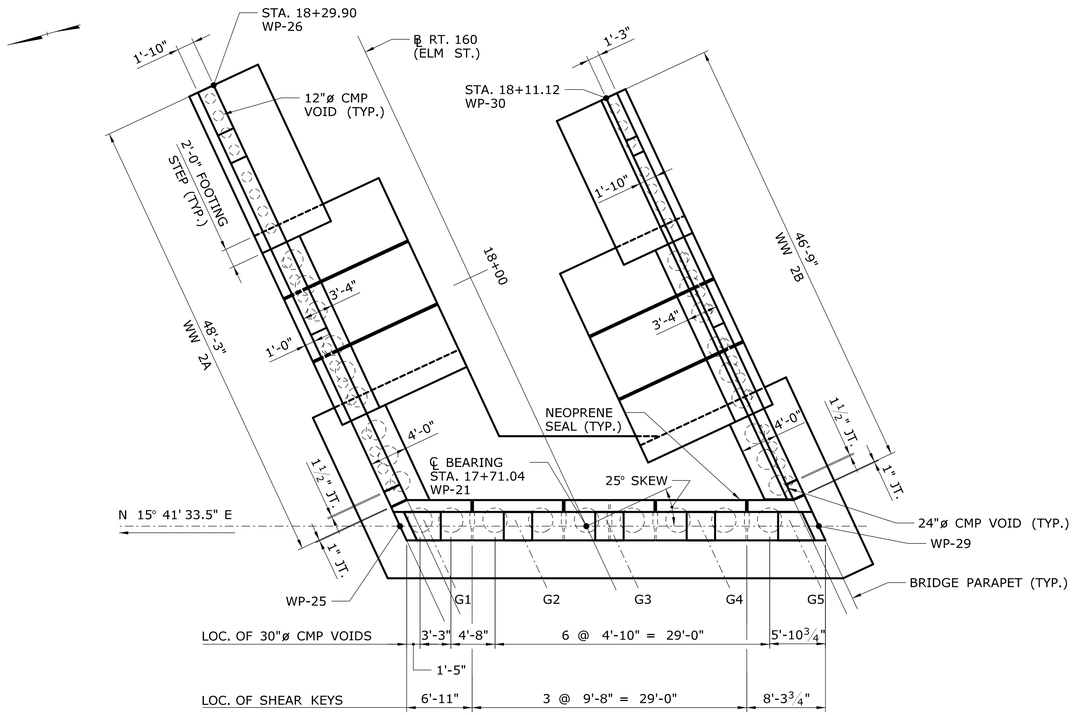

ABUTMENT 2 PLAN

SCALE: ⅛" = 1'-0"

PEDESTAL ELEVATIONS	
LOCATION	ELEVATION
G1	222.14
G2	222.14
G3	222.08
G4	221.82
G5	221.56

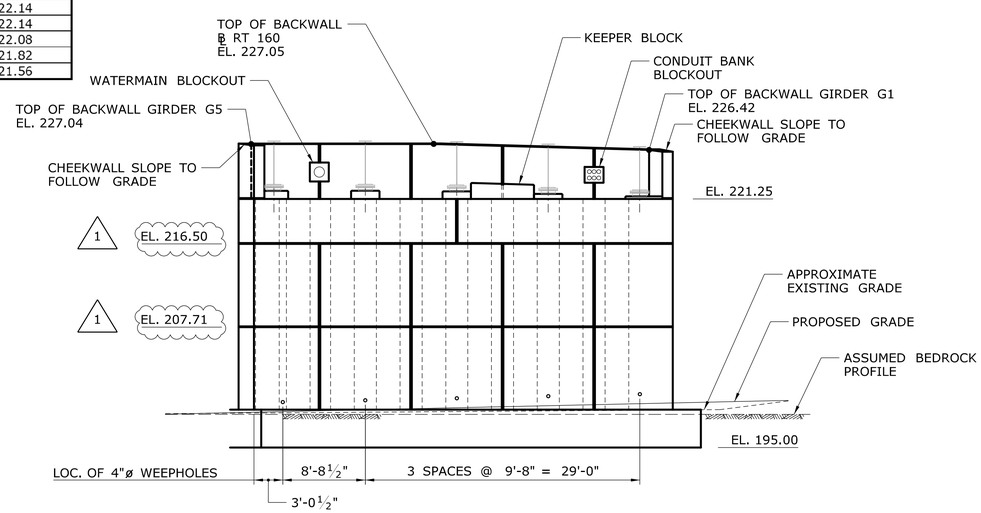

ABUTMENT 2 ELEVATION

SCALE: ⅛" = 1'-0"

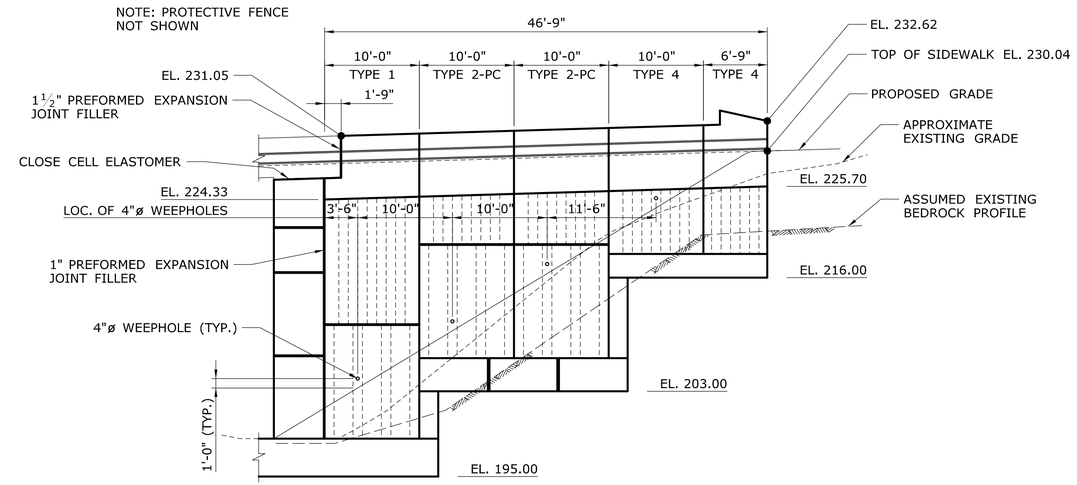

WW2B ELEVATION

SCALE: ⅛" = 1'-0"

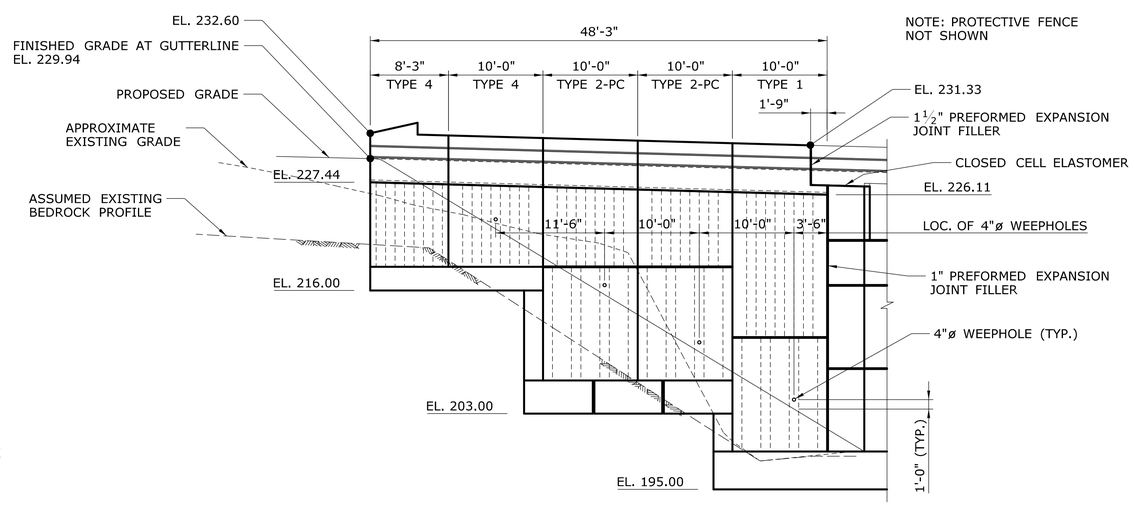

WW2A ELEVATION

SCALE: ⅛" = 1'-0"

ADDENDUM NO. 1

REV.	DATE	REVISION DESCRIPTION	SHEET NO.
-	-	-	-
-	-	-	-
-	-	-	-
-	-	-	-
-	-	-	-
1	11/01/17	ADDED ABUTMENT STEM ELEVATIONS	04.28.A1

THE INFORMATION, INCLUDING ESTIMATED QUANTITIES OF WORK, SHOWN ON THESE SHEETS IS BASED ON LIMITED INVESTIGATIONS BY THE STATE AND IS IN NO WAY WARRANTED TO INDICATE THE CONDITIONS OF ACTUAL QUANTITIES OF WORK WHICH WILL BE REQUIRED.

Plotted Date: 10/31/2017

DESIGNER/DRAFTER: JRA
CHECKED BY: AML
SCALE AS NOTED

STATE OF CONNECTICUT
DEPARTMENT OF TRANSPORTATION

Filename: ...\S-28 03164 - ABUTMENT 2_A1.dgn

SIGNATURE/BLOCK:
Stantec Consulting Services Inc.
55 Church Street
Suite 601
New Haven, CT 06510

PROJECT TITLE:
REPLACEMENT OF BRIDGES 03163 & 03164 ROUTE 160 OVER I-91

TOWN: **ROCKY HILL**

DRAWING TITLE: **BRIDGE 03164 ABUTMENT 2**

PROJECT NO. 118-169
DRAWING NO. S-28
SHEET NO. 04.28.A1

LEGEND:

CAST-IN-PLACE CONCRETE

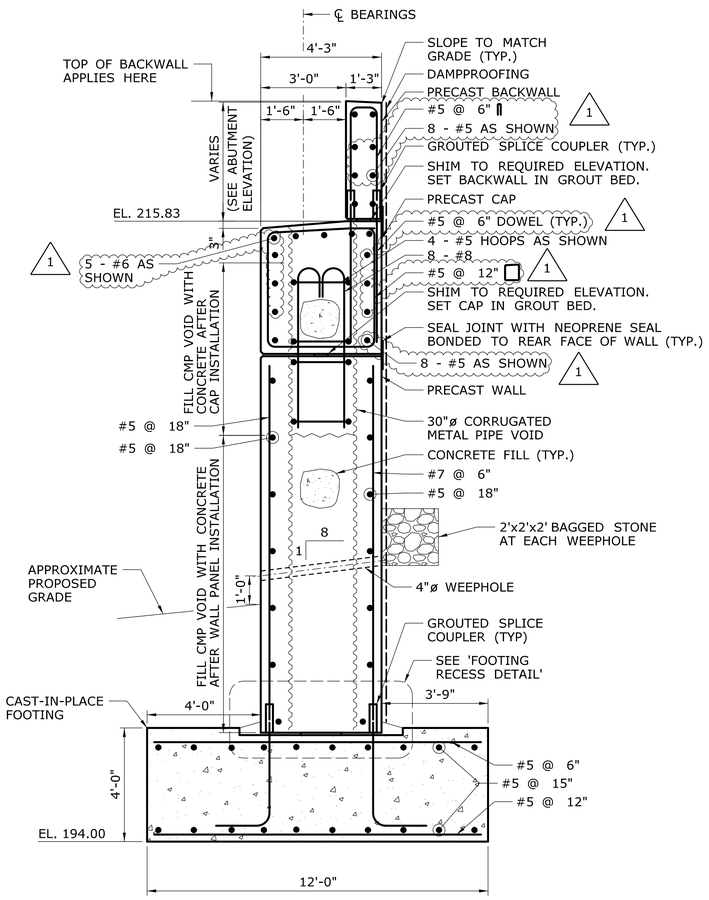

ABUTMENT 1 TYPICAL SECTION

SCALE: $\frac{3}{8}$" = 1'-0"

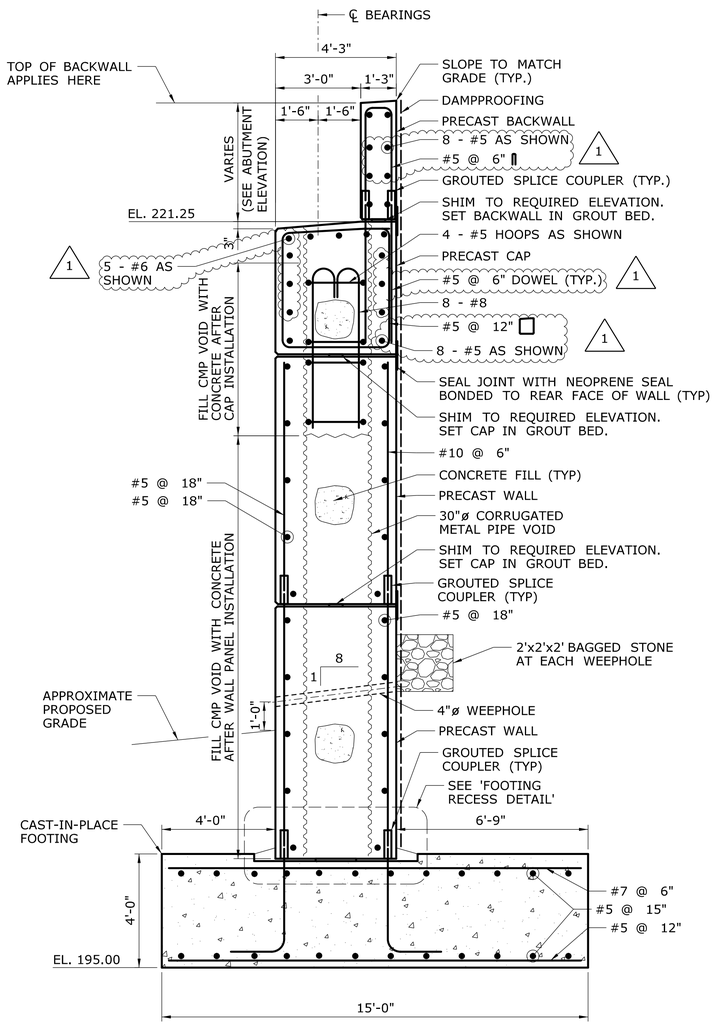

ABUTMENT 2 TYPICAL SECTION

SCALE: $\frac{3}{8}$" = 1'-0"

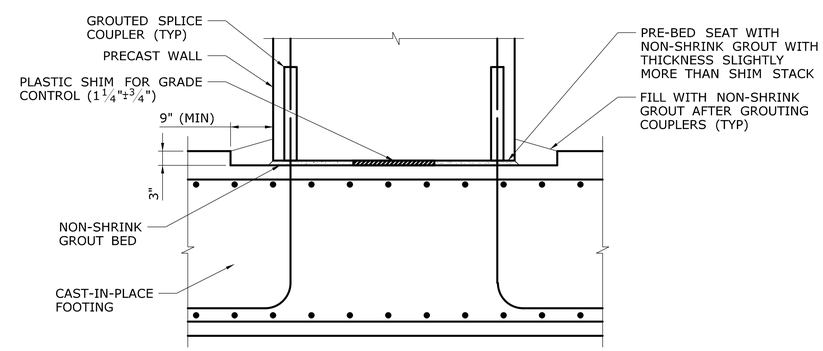

FOOTING RECESS DETAIL

NOT TO SCALE

SUGGESTED GROUTED SPLICE COUPLER CONNECTION SEQUENCE:

1. IT IS RECOMMENDED THAT THE GROUTING PROCEDURE BE COMPLETED IN THE PRESENCE OF A CONTRACTOR'S SUPERVISOR THAT IS EXPERIENCED IN THE INSTALLATION OF GROUTED SLEEVES. MANUFACTURER TRAINING MAY BE REQUIRED FOR INEXPERIENCED STAFF.
2. FOLLOW THE WRITTEN INSTALLATION PROCEDURES OF THE COUPLER MANUFACTURER. THE FOLLOWING ARE GENERAL PROCEDURES THAT APPLY TO MOST COUPLER MANUFACTURERS.
3. IT IS RECOMMENDED THAT THE ELEMENT WITH THE REINFORCEMENT BAR EXTENSIONS BE FABRICATED WITH EXTENDED LENGTHS.
4. SURVEY LOCATION AND ELEVATION OF LOWER ELEMENT.
5. DETERMINE THE REQUIRED REINFORCING BAR EXTENSION LENGTHS AND THE REQUIRED SHIM HEIGHTS BASED ON THE SURVEY.
6. CUT THE BAR EXTENSIONS TO THE REQUIRED LENGTH BASED ON THE SURVEY AND THE COUPLER MANUFACTUER'S RECOMMENDATIONS. FOR COATED BARS, THE ENDS OF THE BARS NEED NOT BE RE-COATED.
7. PRE-BED PRECAST COMPONENT WITH NON-SHRINK GROUT WITH THICKNESS MORE THAN SHIM STACK.
8. ERECT UPPER ELEMENT TO WITHIN THE SPECIFIED ERECTION TOLERANCES. PREVENT BEDDING GROUT FROM FLOWING INTO COUPLER.
9. MAINTAIN INTEGRITY OF GROUT BED DURING SETTING OPERATION. REPAIR GROUT THAT IS DISPLACED OR GAPS THAT DEVELOP IN THE GROUT JOINT USING HAND TOOLS.
10. BRACE THE UPPER ELEMENT.
11. INSTALL GROUT IN COUPLERS FOLLOWING THE MANUFACTURER'S WRITTEN PROCEDURES. IF THE COUPLER IS BELOW THE JOINT, THE COUPLER GROUT CAN BE INSTALLED PRIOR TO APPLICATION OF BEDDING GROUT.
12. ERECTION OF SUBSEQUENT ELEMENTS ABOVE A CONNECTION SHOULD NOT COMMENCE UNTIL THE CONNECTION HAS ACHIEVED ADEQUATE STRENGTH AS DETERMINED THROUGH STRENGTH TESTING OF THE GROUT. THE TIMING OF SUBSEQUENT CONSTRUCTION STEPS SHOULD BE SPECIFIED IN THE BRIDGE ASSEMBLY PLAN.

ADDENDUM NO. 1

REV.	DATE	REVISION DESCRIPTION	SHEET NO.
-	-	-	-
-	-	-	-
-	-	-	-
-	-	-	-
-	-	-	-
1	11/01/17	REBAR CALL-OUTS ADDED	04.29.A1

THE INFORMATION, INCLUDING ESTIMATED QUANTITIES OF WORK, SHOWN ON THESE SHEETS IS BASED ON LIMITED INVESTIGATIONS BY THE STATE AND IS IN NO WAY WARRANTED TO INDICATE THE CONDITIONS OF ACTUAL QUANTITIES OF WORK WHICH WILL BE REQUIRED.

Plotted Date: 10/31/2017

DESIGNER/DRAFTER: **JRA**

CHECKED BY: **AML**

SCALE AS NOTED

STATE OF CONNECTICUT
DEPARTMENT OF TRANSPORTATION

Filename: ...\S-29 03164 - ABUTMENT DETAILS - 1_A1.dgn

SIGNATURE/BLOCK:

Stantec Consulting Services Inc.
55 Church Street
Suite 601
New Haven, CT 06510

PROJECT TITLE:

REPLACEMENT OF BRIDGES 03163 & 03164 ROUTE 160 OVER I-91

TOWN: **ROCKY HILL**

DRAWING TITLE: **BRIDGE 03164 ABUTMENT DETAILS - 1**

PROJECT NO. **118-169**

DRAWING NO. **S-29**

SHEET NO. **04.29.A1**

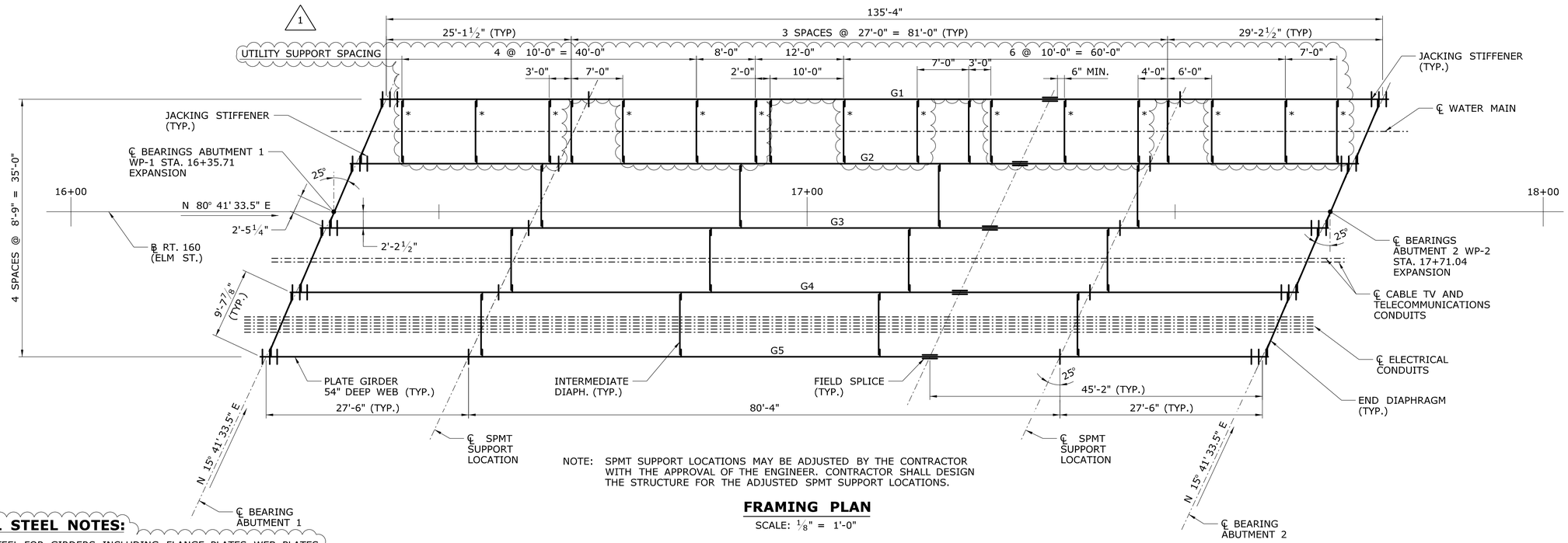

NOTE: SPMT SUPPORT LOCATIONS MAY BE ADJUSTED BY THE CONTRACTOR WITH THE APPROVAL OF THE ENGINEER. CONTRACTOR SHALL DESIGN THE STRUCTURE FOR THE ADJUSTED SPMT SUPPORT LOCATIONS.

FRAMING PLAN

SCALE: ⅛" = 1'-0"

NOTE: ALL INTERMEDIATE DIAPHRAGMS SIMILAR UNLESS NOTED THUSLY:
* = UTILITY SUPPORT DIAPHRAGM

1

STRUCTURAL STEEL NOTES:

1. STRUCTURAL STEEL FOR GIRDERS, INCLUDING FLANGE PLATES, WEB PLATES AND GIRDER FIELD SPLICE PLATES SHALL CONFORM TO AASHTO M270, GRADE HPS 70W.

   ALL OTHER STRUCTURAL STEEL, INCLUDING DIAPHRAGMS, CONNECTION PLATES, DRIP BARS AND BEARING STIFFENERS SHALL CONFORM TO AASHTO M270, GRADE 50W.

2. WELDING DETAILS, PROCEDURES AND TESTING METHODS SHALL CONFORM TO ANSI/AASHTO/AWS D1.5-2015 - BRIDGE WELDING CODE, UNLESS OTHERWISE NOTED.

3. BOLTED FIELD SPLICES, OTHER THAN THOSE INDICATED ON THE PLANS, WILL NOT BE ALLOWED EXCEPT WITH THE WRITTEN PERMISSION OF THE ENGINEER PRIOR TO SUBMISSION OF SHOP PLANS. IF ALLOWED, THESE SPLICES SHALL BE DESIGNED BY THE CONTRACTOR AND APPROVED BY THE ENGINEER. THE COST OF THESE SPLICES, INCLUDING THE COST OF DESIGN, SHALL BE AT NO EXTRA EXPENSE TO THE STATE.

4. ALL WEB TO FLANGE, WEB TO BEARING STIFFENER, WEB TO CONNECTION PLATE, AND BEARING STIFFENER TO FLANGE FILLET WELDS SHALL BE INSPECTED IN THEIR ENTIRETY BY THE MAGNETIC PARTICLE METHOD.

5. MULTIPLE PASS WELDS, INSPECTED BY THE MAGNETIC PARTICLE METHOD, SHALL HAVE EACH PASS OR LAYER INSPECTED AND ACCEPTED BEFORE PROCEEDING TO THE NEXT PASS OR LAYER, AS DETERMINED BY THE ENGINEER.

6. WELDED FLANGE SPLICES SHALL BE LOCATED A MINIMUM OF SIX INCHES FROM STIFFENERS, CONNECTION PLATES, AND WEB SPLICES.

7. WELDED WEB SPLICES SHALL BE LOCATED A MINIMUM OF SIX INCHES FROM STIFFENER, CONNECTION PLATES, AND FLANGE SPLICES.

8. BEARING STIFFENERS, JACKING STIFFENERS, CONNECTION PLATES AND THE ENDS OF GIRDERS SHALL BE VERTICAL AFTER THE APPLICATION OF FULL DEAD LOADS.

9. THE STRUCTURAL STEEL FABRICATOR SHALL BE CERTIFIED UNDER THE AISC QUALITY CONTROL PROGRAM AS NOTED BELOW:

   CATEGORY MBr - MAJOR STEEL BRIDGES

10. THE CONTRACTOR SHALL TAKE PROPER PRECAUTIONS TO INSURE THE STABILITY OF ALL STRUCTURAL ELEMENTS UNTIL THE TOTAL STRUCTURE IS IN BEING.

11. IT SHALL BE THE CONTRACTOR'S RESPONSIBILITY TO PROVIDE ANY ADDITIONAL TEMPORARY BRACING REQUIRED TO MAINTAIN THE GEOMETRY OF THE INDIVIDUAL PLATE GIRDERS, AS WELL AS THE TOTAL STEEL STRUCTURE, THROUGHOUT ALL PHASES OF CONSTRUCTION INCLUDING PLACEMENT OF THE CONCRETE DECK.

12. THE COST OF TEMPORARY SHORING WILL NOT BE MEASURED FOR PAYMENT, THE COST OF WHICH SHALL BE INCLUDED IN THE ITEM "STRUCTURAL STEEL (SITE NO. 2)".

1

13. SHOP WELD SPLICES SHALL BE LOCATED WITHIN THE MIDDLE THIRD OF THE SPAN.

BRIDGE 03164 - CAMBER TABLE (FEET)

		ABUT. 1	L/12	2L/12	3L/12	4L/12	5L/12	6L/12	7L/12	8L/12	9L/12	10L/12	11L/12	ABUT. 2
G1, G5	STEEL DEFLECTION	0.000	0.057	0.103	0.140	0.165	0.181	0.186	0.181	0.165	0.140	0.103	0.057	0.000
	ADDITIONAL DL DEFLECTION	0.000	0.134	0.243	0.328	0.389	0.425	0.437	0.425	0.389	0.328	0.243	0.134	0.000
	COMPOSITE DL DEFLECTION	0.000	0.059	0.107	0.145	0.172	0.188	0.193	0.188	0.172	0.145	0.107	0.059	0.000
	EXTRA CAMBER	0.000	0.000	0.000	0.000	0.000	0.000	0.000	0.000	0.000	0.000	0.000	0.000	0.000
	VERTICAL CURVE ORDINATE	0.000	0.078	0.143	0.193	0.228	0.250	0.257	0.250	0.228	0.193	0.143	0.078	0.000
	TOTAL CAMBER	0.000	0.328	0.597	0.805	0.954	1.044	1.074	1.044	0.954	0.805	0.597	0.328	0.000
G2-G4	STEEL DEFLECTION	0.000	0.060	0.108	0.146	0.174	0.190	0.195	0.190	0.174	0.146	0.108	0.060	0.000
	ADDITIONAL DL DEFLECTION	0.000	0.168	0.305	0.411	0.488	0.533	0.549	0.533	0.488	0.411	0.305	0.168	0.000
	COMPOSITE DL DEFLECTION	0.000	0.055	0.099	0.134	0.159	0.174	0.179	0.174	0.159	0.134	0.099	0.055	0.000
	EXTRA CAMBER	0.000	0.000	0.000	0.000	0.000	0.000	0.000	0.000	0.000	0.000	0.000	0.000	0.000
	VERTICAL CURVE ORDINATE	0.000	0.078	0.143	0.193	0.228	0.250	0.257	0.250	0.228	0.193	0.143	0.078	0.000
	TOTAL CAMBER	0.000	0.360	0.655	0.885	1.049	1.147	1.180	1.147	1.049	0.885	0.655	0.360	0.000

ADDENDUM NO. 1

REV.	DATE	REVISION DESCRIPTION	SHEET NO.
-	-	-	-
-	-	-	-
-	-	-	-
-	-	-	-
-	-	-	-
1	11/01/17	REVISED UTILITY DIAPHRAGM SPACING & NOTES	04.36.A1

THE INFORMATION, INCLUDING ESTIMATED QUANTITIES OF WORK, SHOWN ON THESE SHEETS IS BASED ON LIMITED INVESTIGATIONS BY THE STATE AND IS IN NO WAY WARRANTED TO INDICATE THE CONDITIONS OF ACTUAL QUANTITIES OF WORK WHICH WILL BE REQUIRED.

Plotted Date: 10/31/2017

DESIGNER/DRAFTER: JMB
CHECKED BY: AML
SCALE AS NOTED

STATE OF CONNECTICUT
DEPARTMENT OF TRANSPORTATION

Filename: ...\S-36 03164 - FRAMING PLAN.A1.dgn

SIGNATURE/BLOCK:
STATE OF CONNECTICUT
JOSHUA M. LEGARDO
NO. 29,000
LICENSED PROFESSIONAL ENGINEER
Stantec Consulting Services Inc.
55 Church Street
Suite 601
New Haven, CT 06510

PROJECT TITLE:
REPLACEMENT OF BRIDGES 03163 & 03164 ROUTE 160 OVER I-91

TOWN: **ROCKY HILL**

DRAWING TITLE: **BRIDGE 03164 FRAMING PLAN**

PROJECT NO. 118-169
DRAWING NO. S-36
SHEET NO. 04.36.A1

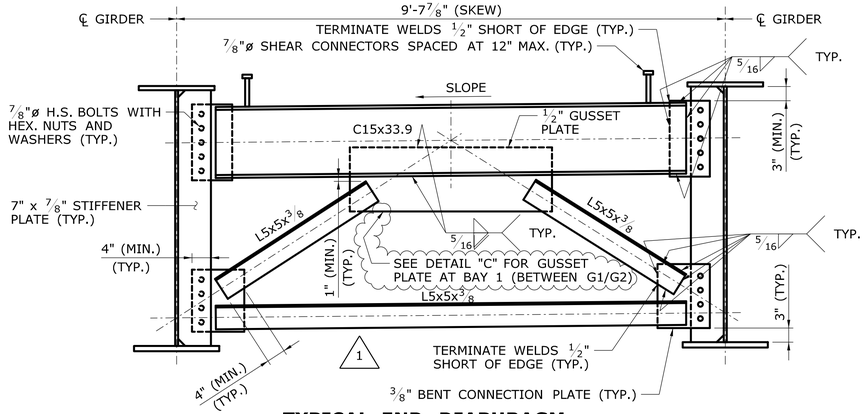

TYPICAL END DIAPHRAGM

SCALE: 3/4" = 1'-0"

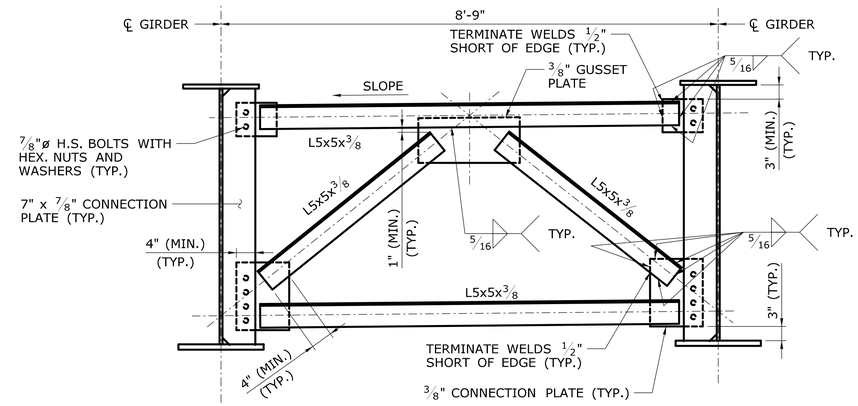

TYPICAL INTERMEDIATE DIAPHRAGM

SCALE: 3/4" = 1'-0"

NOTES:

1. BOLT HOLES IN CONNECTION PLATES AND GUSSET PLATES SHALL BE 15/16"ø (STANDARD) FOR 7/8"ø BOLTS. BOLT HOLES IN BEARING STIFFENER SHALL BE 1 1/16"ø (OVERSIZED).
2. CONNECTION PLATES AND GUSSET PLATES SHALL BE SQUARE OR RECTANGULAR.

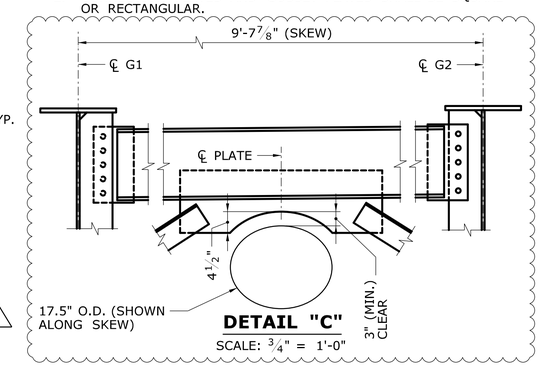

DETAIL "C"

SCALE: 3/4" = 1'-0"

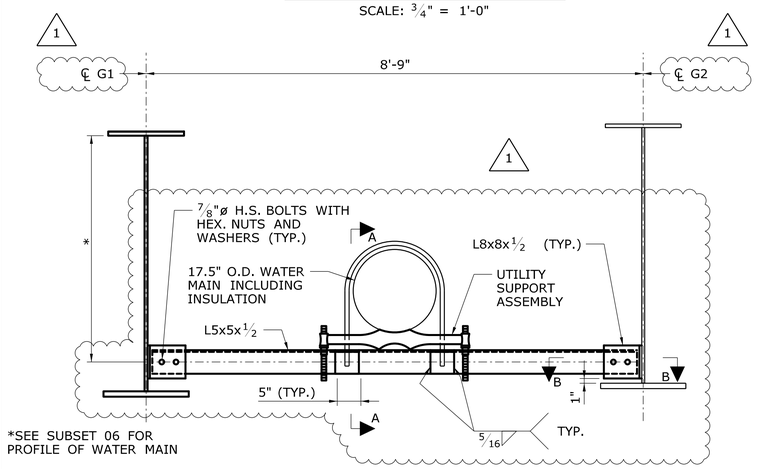

TYPICAL UTILITY SUPPORT DIAPHRAGM

SCALE: 3/4" = 1'-0"

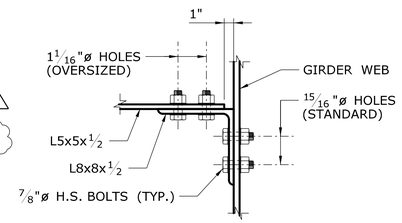

SECTION B-B

NOT TO SCALE

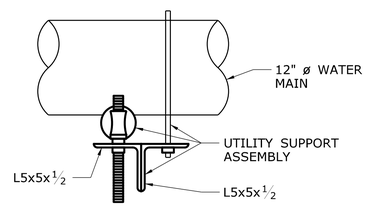

SECTION A-A

NOT TO SCALE

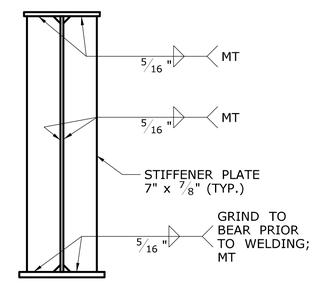

BEARING STIFFENER

NOT TO SCALE

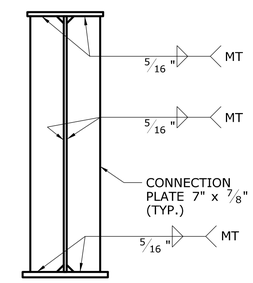

DIAPHRAGM CONNECTION PLATE

NOT TO SCALE

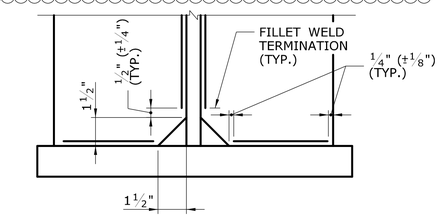

NOTE:
DETAILS ARE SHOWN FOR CONNECTION PLATE AND STIFFENER PLATES AT BOTTOM FLANGE, TOP FLANGE IS SIMILAR.

CLIP AND WELD TERMINATION DETAILS

NOT TO SCALE

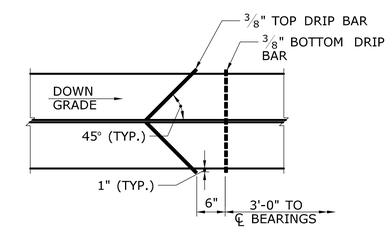

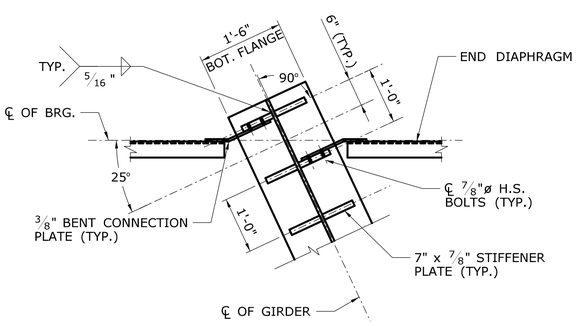

SECTION AT ABUTMENT 1 & 2

SCALE: 3/4" = 1'-0"

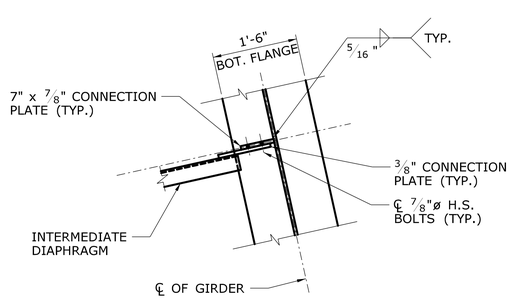

SECTION AT TYPICAL INTERMEDIATE DIAPHRAGM

SCALE: 3/4" = 1'-0"

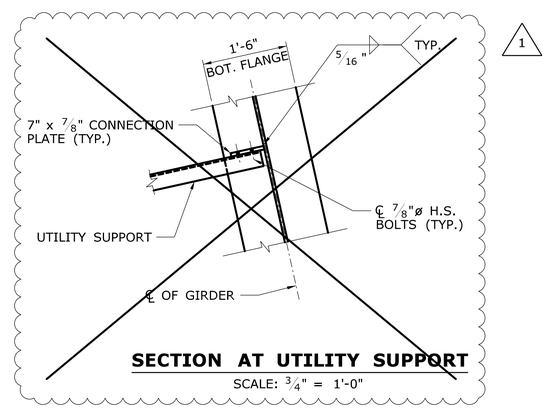

SECTION AT UTILITY SUPPORT

SCALE: 3/4" = 1'-0"

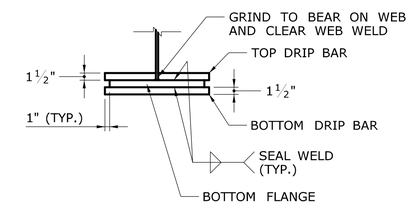

DRIP BAR DETAILS

NOT TO SCALE

ADDENDUM NO. 1

REV.	DATE	REVISION DESCRIPTION	SHEET NO.
-	-	-	-
-	-	-	-
-	-	-	-
-	-	-	-
-	-	-	-
1	11/01/17	REVISED DIAPHRAGMS FOR WATER MAIN	04.38.A1

THE INFORMATION, INCLUDING ESTIMATED QUANTITIES OF WORK, SHOWN ON THESE SHEETS IS BASED ON LIMITED INVESTIGATIONS BY THE STATE AND IS IN NO WAY WARRANTED TO INDICATE THE CONDITIONS OF ACTUAL QUANTITIES OF WORK WHICH WILL BE REQUIRED.

Plotted Date: 10/31/2017

DESIGNER/DRAFTER: JMB
CHECKED BY: AML
SCALE AS NOTED

STATE OF CONNECTICUT
DEPARTMENT OF TRANSPORTATION

Filename: ...\S-38 03164 - STEEL DETAILS - 2_A1.dgn

SIGNATURE/BLOCK:
Stantec Consulting Services Inc.
55 Church Street
Suite 601
New Haven, CT 06510

PROJECT TITLE:
REPLACEMENT OF BRIDGES 03163 & 03164 ROUTE 160 OVER I-91

TOWN: **ROCKY HILL**

DRAWING TITLE: **BRIDGE 03164 STEEL DETAILS - 2**

PROJECT NO. **118-169**
DRAWING NO. **S-38**
SHEET NO. **04.38.A1**

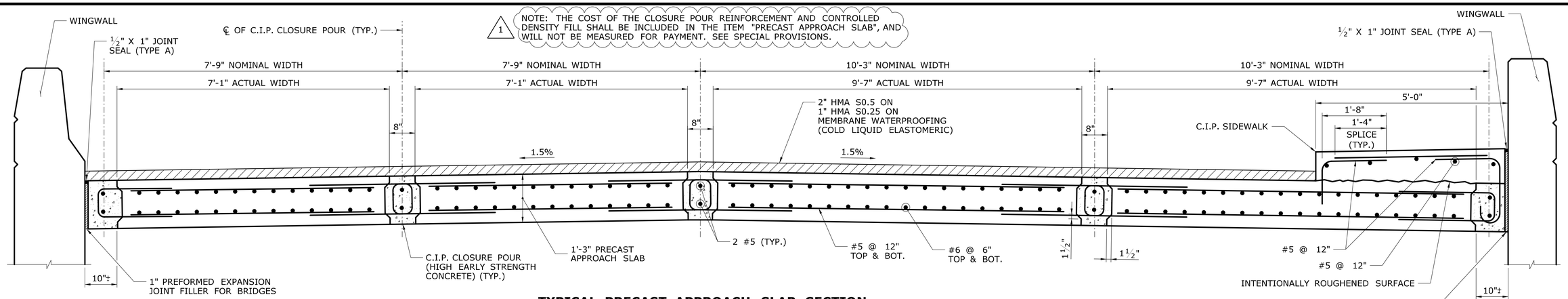

TYPICAL PRECAST APPROACH SLAB SECTION

SCALE: ¾" = 1'-0"

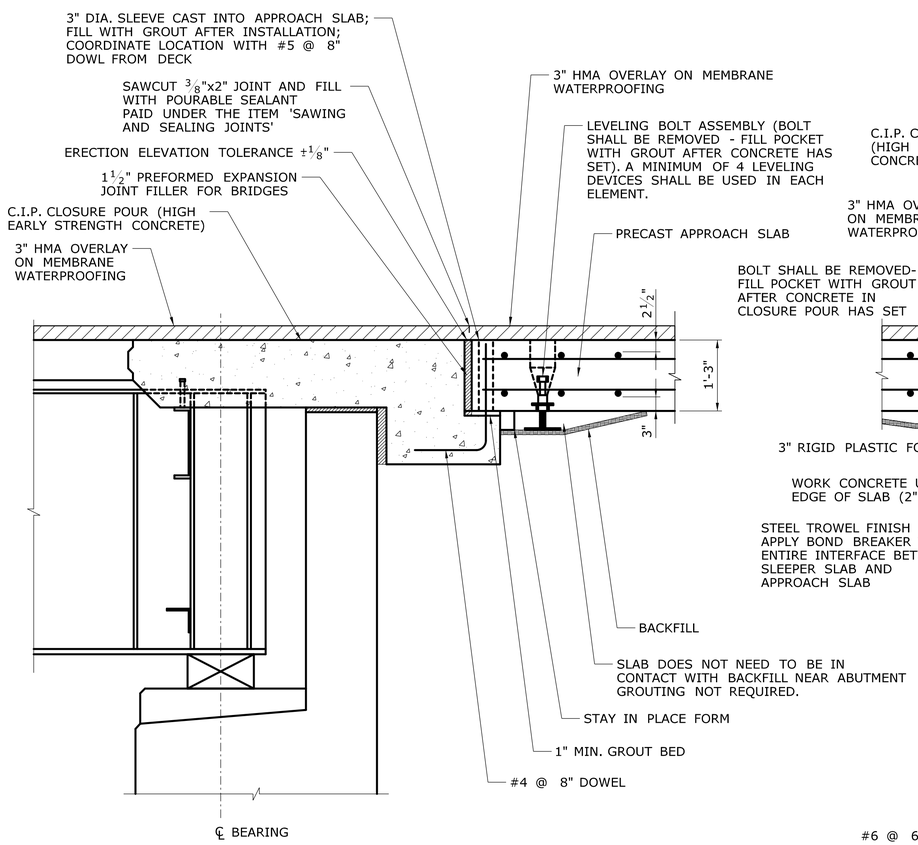

PRECAST APPROACH SLAB AT ABUTMENT

SCALE: ¾" = 1'-0"

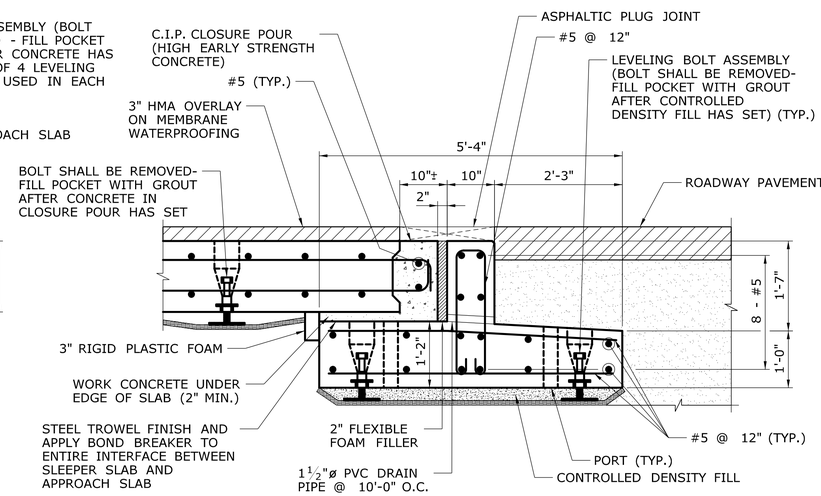

PRECAST APPROACH SLAB AT END

SCALE: ¾" = 1'-0"

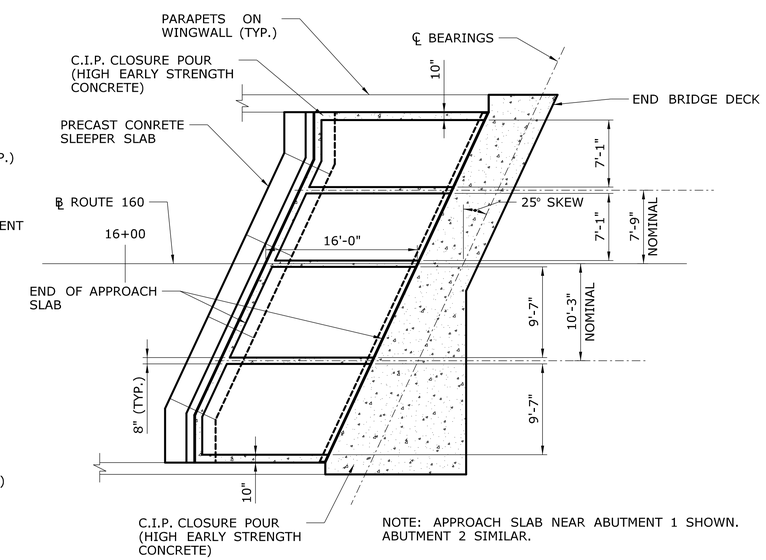

TYPICAL PRECAST APPROACH SLAB LAYOUT

SCALE: ⅛" = 1'-0"

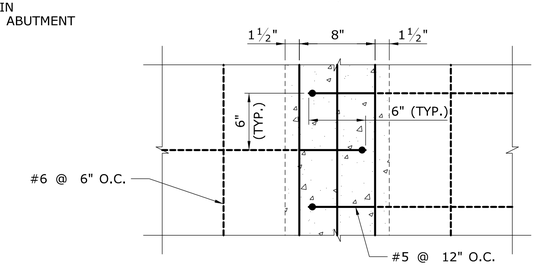

LONGITUDINAL C.I.P. CLOSURE POUR - ENLARGED PLAN

SCALE: 1½" = 1'-0"

THERMAL MOVEMENT	
LOCATION	MOVEMENT RANGE
ABUT. 1	1½"
ABUT. 2	1½"

PRECAST SLEEPER SLAB NOTES:

1. CONTRACTOR TO DETERMINE SIZE AND SPACING OF PORTS BASED ON CONTROLLED DENSITY FILL PROPERTIES.
2. EXCAVATION FOR SLEEPER SLABS SHALL BE CAREFULLY MADE AFTER COMPACTED ABUTMENT EMBANKMENT IS IN PLACE. THE SLEEPER SLABS SHALL BE FOUNDED ON UNDISTURBED COMPACT MATERIAL OR RE-COMPACTED MATERIAL. NO LOOSE BACKFILL SHALL BE ALLOWED. THE CONTRACTOR SHALL TAKE ALL NECESSARY PRECAUTIONS TO PROTECT THE SLEEPER SLAB FROM TEMPORARY LOADINGS OR ANY CONDITION WHICH COULD CAUSE MOVEMENTS OR UNEVEN SETTLEMENT OF THE SLEEPER SLAB.
3. A MINIMUM OF 4 LEVELING DEVICES SHALL BE USED IN EACH ELEMENT.

ADDENDUM NO. 1

REV.	DATE	REVISION DESCRIPTION	SHEET NO.
-	-	-	-
-	-	-	-
-	-	-	-
-	-	-	-
-	-	-	-
1	11/01/17	REVISED NOTE	04.42.A1

THE INFORMATION, INCLUDING ESTIMATED QUANTITIES OF WORK, SHOWN ON THESE SHEETS IS BASED ON LIMITED INVESTIGATIONS BY THE STATE AND IS IN NO WAY WARRANTED TO INDICATE THE CONDITIONS OF ACTUAL QUANTITIES OF WORK WHICH WILL BE REQUIRED.

Plotted Date: 10/31/2017

DESIGNER/DRAFTER: JJF
CHECKED BY: AML
SCALE AS NOTED

STATE OF CONNECTICUT
DEPARTMENT OF TRANSPORTATION

Filename: ...\S-42 03164 - APPROACH SLAB DETAILS_A1.dgn

SIGNATURE/BLOCK:
Stantec Consulting Services Inc.
55 Church Street
Suite 601
New Haven, CT 06510

PROJECT TITLE:
REPLACEMENT OF BRIDGES 03163 & 03164 ROUTE 160 OVER I-91

TOWN: **ROCKY HILL**

DRAWING TITLE: **BRIDGE 03164 APPROACH SLAB DETAILS**

PROJECT NO. 118-169
DRAWING NO. S-42
SHEET NO. 04.42.A1

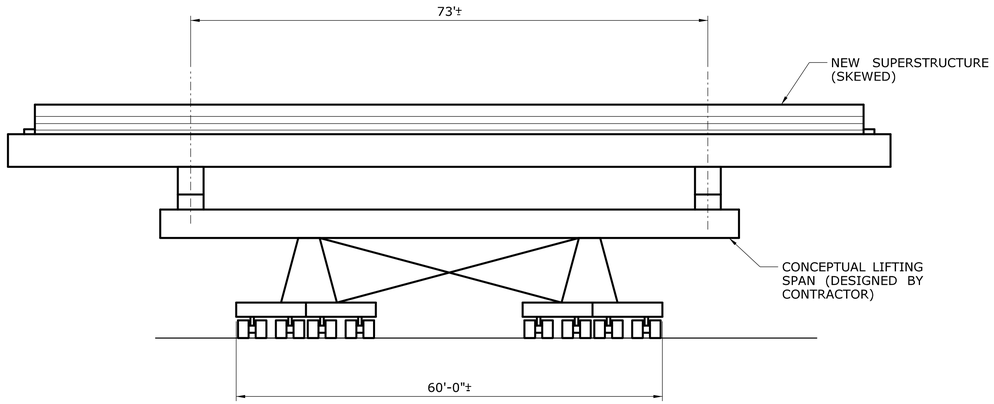

ELEVATION

SCALE: 3/32" = 1'-0"

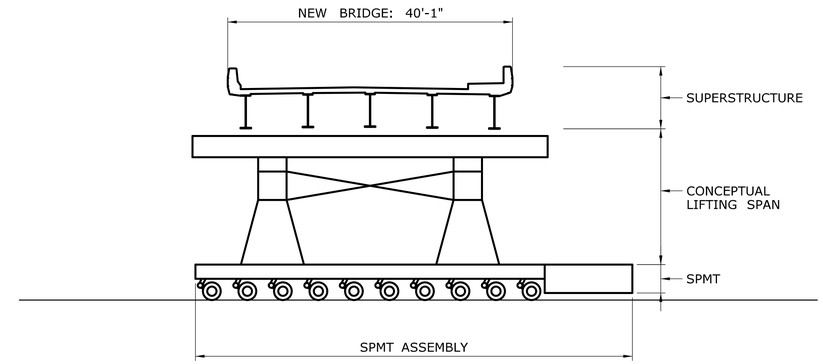

SECTION

SCALE: 3/32" = 1'-0"

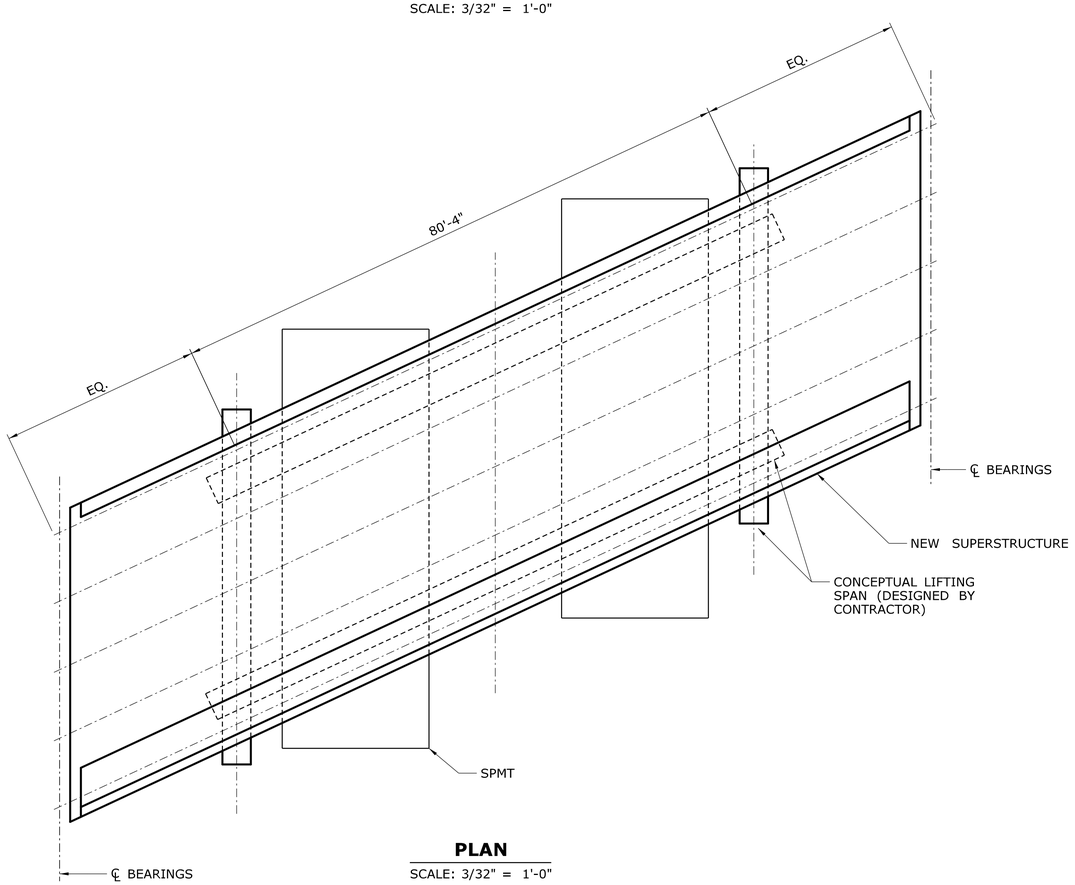

PLAN

SCALE: 3/32" = 1'-0"

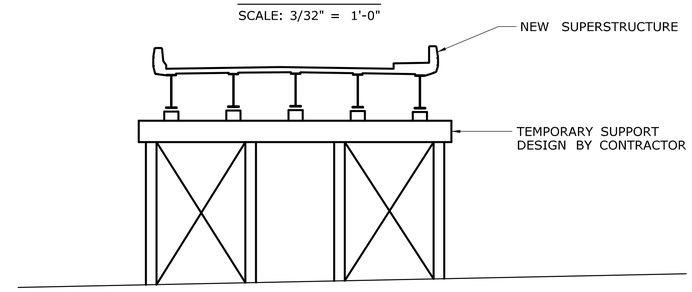

CONCEPTUAL TEMPORARY SUPPORT

SCALE: 3/32" = 1'-0"

GENERAL NOTES:

1. THE TEMPORARY SUPPORTS TO FACILITATE ERECTION OF THE NEW BRIDGES AND TO SUPPORT THE EXISTING BRIDGES AFTER REMOVAL SHALL BE DESIGNED BY THE CONTRACTOR.
2. THE TEMPORARY SUPPORTS SHALL BE DESIGNED TO SUPPORT ALL ANTICIPATED LOADS AS APPLICABLE, INCLUDING ANY ASSOCIATED CONSTRUCTION LOADS (SCREED, ETC.) THAT WILL BE USED AND SUPPORTED BY THE BRIDGE IN ITS TEMPORARY LOCATION. (1)
3. THE CONTRACTOR SHALL BE RESPONSIBLE FOR DETERMINING GEOTECHNICAL DESIGN CRITERIA FOR THE TEMPORARY SUPPORTS.
4. THE LIFTING PLAN SHOWN IS CONCEPTUAL ONLY. THE CONTRACTOR SHALL DESIGN THE SYSTEM, PREPARE ALL WORKING DRAWINGS AND CALCULATIONS FOR SUBMITTAL AND APPROVAL.
5. SPMT'S SHALL BE CAPABLE OF TRAVELING WITH FULL BRIDGE LOAD ON UNEVEN TERRAIN HAVING VARIATIONS UP TO 18" ACROSS THE TRAVEL PATH, TRAVERSE ALL GRADES TO BE ENCOUNTERED ALONG THE TRAVEL PATH, AND SHALL BE CAPABLE OF PERFORMING ALL ANTICIPATED MOVEMENTS NECESSARY TO TRAVERSE ALONG THE TRAVEL PATH.
6. THE CONTRACTOR SHALL EVALUATE GROUND SETTLEMENTS DURING ALL STAGES OF SPMT OPERATIONS TO ENSURE THEY ARE WITHIN REQUIRED TOLERANCES.
7. IN NO CASE SHALL THE PLATFORM BE OUT OF LEVEL BY MORE THAN 6 DEGREES DURING LIFTING, TRANSPORTING, SETTING THE BRIDGE, OR DURING EQUIPMENT MALFUNCTION. THE CONFIGURATION OF THE SPMT'S AND LIFT SPAN SHALL CONSIDER THE CENTER OF GRAVITY OF THE BRIDGE RELATIVE TO STABILITY OF THE LOAD SUCH THAT THE OUT OF LEVEL LIMITS ARE ESTABLISHED WITH A MINIMUM FACTOR OF SAFETY OF 2.0.

ADDENDUM NO. 1

REV.	DATE	REVISION DESCRIPTION	SHEET NO.
-	-	-	-
-	-	-	-
-	-	-	-
-	-	-	-
-	-	-	-
1	11/01/17	REVISED NOTE	04.50.A1

THE INFORMATION, INCLUDING ESTIMATED QUANTITIES OF WORK, SHOWN ON THESE SHEETS IS BASED ON LIMITED INVESTIGATIONS BY THE STATE AND IS IN NO WAY WARRANTED TO INDICATE THE CONDITIONS OF ACTUAL QUANTITIES OF WORK WHICH WILL BE REQUIRED.

Plotted Date: 10/31/2017

DESIGNER/DRAFTER: **JMB**

CHECKED BY: **AML**

SCALE AS NOTED

STATE OF CONNECTICUT
DEPARTMENT OF TRANSPORTATION

Filename: ...\S-50 SPMT PLAN_A1.dgn

SIGNATURE/BLOCK:

Stantec Consulting Services Inc.
55 Church Street
Suite 601
New Haven, CT 06510

PROJECT TITLE:

REPLACEMENT OF BRIDGES 03163 & 03164 ROUTE 160 OVER I-91

TOWN: **ROCKY HILL**

DRAWING TITLE: **SPMT AND TEMPORARY SUPPORT DETAILS**

PROJECT NO. **118-169**

DRAWING NO. **S-50**

SHEET NO. **04.50.A1**