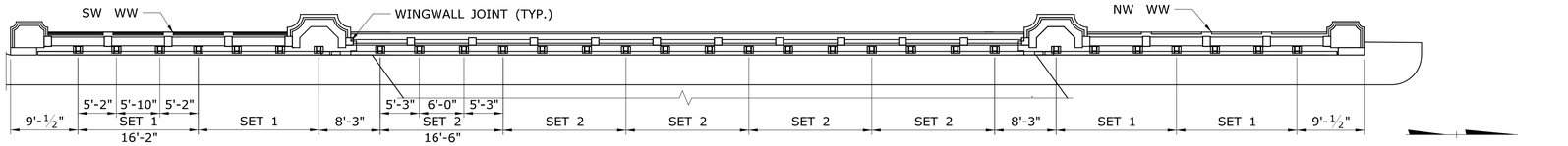

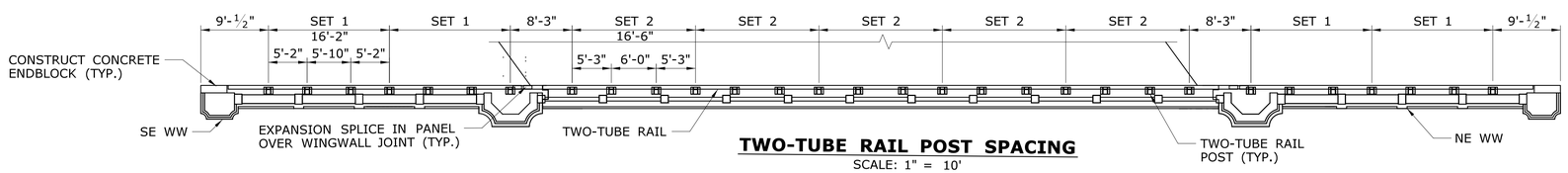

TWO-TUBE RAIL POST SPACING

SCALE: 1" = 10'

NOTES:

1) THE STRUCTURAL-TUBE RAILING SHALL BE MADE FROM STRUCTURAL STEEL TUBING IN ACCORDANCE WITH ASTM A500 GRADE B OR ASTM A501.

2) THE POSTS AND ANCHOR PLATES SHALL BE MADE FROM STRUCTURAL STEEL IN ACCORDANCE WITH ASTM A709 GRADE 36.

3) THE STRUCTURAL-TUBE RAILING, POSTS, AND ANCHOR PLATES SHALL BE HOT-DIP GALVANIZED IN ACCORDANCE WITH ASTM A123.

4) RAIL POST ANCHOR RODS SHALL CONFORM TO THE REQUIREMENTS OF ASTM A449 120 KSI MINIMUM TENSILE STRENGTH. NUTS SHALL CONFORM TO THE REQUIREMENTS OF ASTM A563 GRADE DH, HEX. WASHERS SHALL CONFORM TO THE REQUIREMENTS OF ASTM F436.

5) OTHER BOLTS SHALL CONFORM TO THE REQUIREMENTS OF ASTM A307. NUTS SHALL CONFORM TO THE REQUIREMENTS OF ASTM A563 GRADE DH, HEX. WASHERS SHALL CONFORM TO THE REQUIREMENTS OF ASTM F436.

6) ANCHOR RODS, OTHER BOLTS, NUTS, AND WASHERS SHALL BE HOT-DIP GALVANIZED TO THE REQUIREMENTS OF ASTM A153. △1

7) ENSURE THE EXPANSION SPLICE IS LOCATED IN THE RAILING PANEL WHICH PASSES OVER THE BRIDGE EXPANSION JOINT AS INDICATED ON THE PLAN.

8) SLOTS MAY BE OMITTED IN STANDARD SLEEVES WHERE BOLTS ARE REQUIRED ON ONE SIDE OF SPLICE ONLY.

9) TACK WELDING SHALL ONLY BE PERFORMED PRIOR TO GALVANIZING. △1

10) AT POST LOCATIONS, DRILL TWO 1 1/16" DIA. HOLES IN THE RAILS TO RECEIVE RAIL BOLTS (SHOP OR FIELD). SEE POST DETAILS FOR HOLE SPACING.

11) BEFORE INSTALLING RAILS, PAINT CUT, DRILLED, OR OTHERWISE DAMAGED SURFACE AREAS OF THE RAILING COMPONENTS WITH TWO COATS OF ZINC RICH PAINT CONFORMING TO THE REQUIREMENTS OF ASTM A780.

12) AFTER INSTALLING THE RAILS, PAINT EXPOSED BOLT THREADS WITH TWO COATS OF ZINC RICH PAINT CONFORMING TO THE REQUIREMENTS OF ASTM A780.

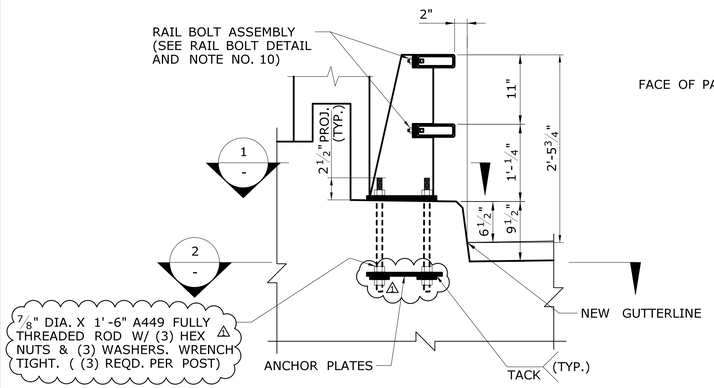

TYPICAL ASSEMBLY DETAIL

SCALE: 1" = 1' - 0"

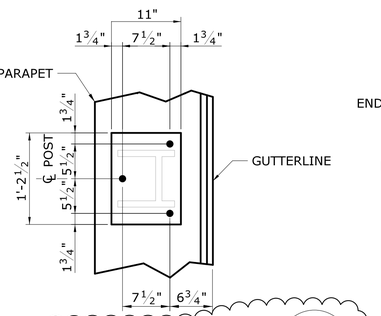

△1 **PLAN** (1 / -)

(ANCHOR RODS, RAILS, AND RAIL BOLTS NOT SHOWN)
SCALE 1" = 1'-0"

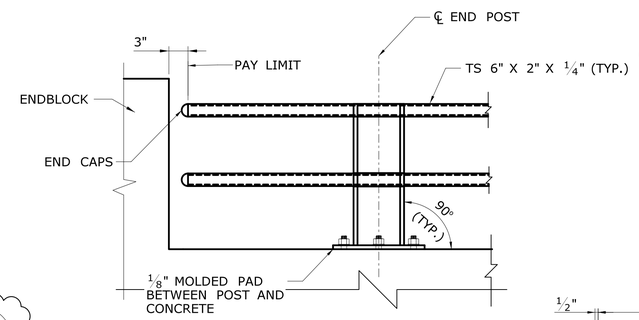

NOTE: CONCRETE RAIL NOT SHOWN FOR CLARITY

ELEVATION AT RAIL TERMINATION

NOT TO SCALE

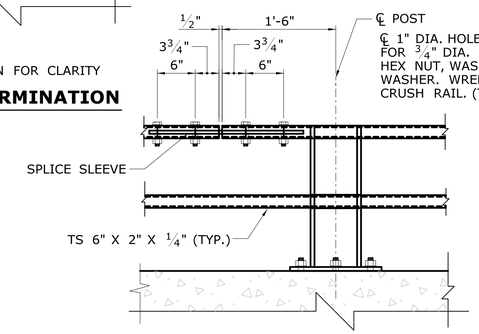

DOUBLE-BOLTED SPLICE

(TOP OR BOTTOM RAIL)
SCALE 1" = 1'-0"

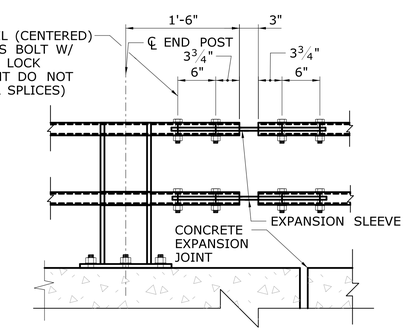

EXPANSION SPLICE

(TOP AND BOTTOM RAIL)
SCALE 1" = 1'-0"

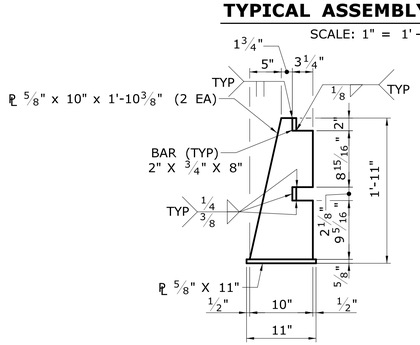

SIDE VIEW

SCALE: 1" = 1'-0"

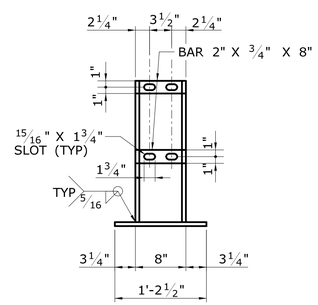

FRONT VIEW

SCALE: 1" = 1'-0"

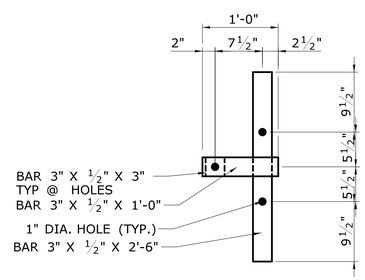

ANCHOR PLATE

SCALE: 1" = 1'-0"

2 / -

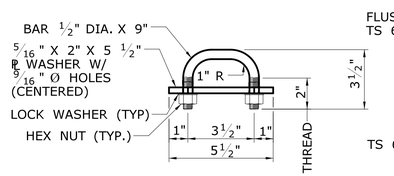

RAIL BOLT DETAIL

SCALE: 3" = 1'-0"

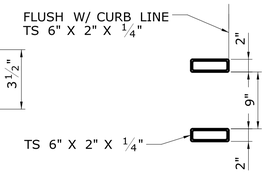

RAIL SECTION

SCALE: 1" = 1'-0"

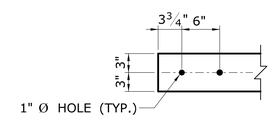

PLAN: TYPICAL RAIL END DETAIL

SCALE: 1" = 1'-0"

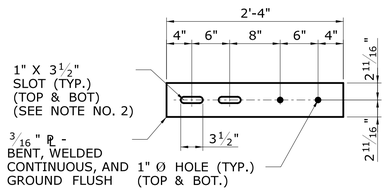

SPLICE SLEEVE

SCALE 1" = 1'-0"

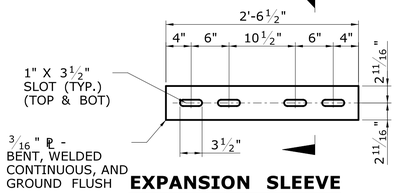

EXPANSION SLEEVE

SCALE 1" = 1'-0"

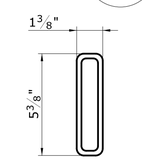

SLEEVE SECTION (END VIEW)

3 / -

SCALE 3" = 1'-0"

THE DESIGN APPEARS TO CONFORM TO APPLICABLE CRITERIA. APPROVAL IS NOT TO BE CONSTRUED TO MEAN THAT ALL ASPECTS OF THE DESIGN HAVE BEEN PERSONALLY CHECKED BY THE UNDERSIGNED.

Mary E. Baker, P.E.
2017.10.27 10:35:40-04'00'
TRANSPORTATION PRINCIPAL ENGINEER

ADDENDUM NO. 1

REV.	DATE	REVISION DESCRIPTION	SHEET NO.
△1	10/12/17	REVISED ANCHOR BOLTS TO THREADED RODS	

THE INFORMATION, INCLUDING ESTIMATED QUANTITIES OF WORK, SHOWN ON THESE SHEETS IS BASED ON LIMITED INVESTIGATIONS BY THE STATE AND IS IN NO WAY WARRANTED TO INDICATE THE CONDITIONS OF ACTUAL QUANTITIES OF WORK WHICH WILL BE REQUIRED.

Plotted Date: 10/27/2017

DESIGNER/DRAFTER: JWP
CHECKED BY: SAB
SCALE AS NOTED

STATE OF CONNECTICUT
DEPARTMENT OF TRANSPORTATION

Filename: ...\0102-0356_S-24A_Two Tube Retrofit Bridge Railing Details.dgn

SIGNATURE/BLOCK: OFFICE OF ENGINEERING
APPROVED BY: Mary E. Baker

PROJECT TITLE: REHABILITATION OF BRIDGE NO.00722 WEST ROCKS RD. OVER ROUTE 15

TOWN: NORWALK

DRAWING TITLE: TWO-TUBE BRIDGE RAILING DETAILS

PROJECT NO. 0102-0356
DRAWING NO. S-24
SHEET NO. 04.24.A1