04 - STRUCTURES

INDEX OF DRAWINGS

DRAWING NUMBER	DRAWING TITLE	DRAWING NUMBER	DRAWING TITLE
S-01	STRUCTURES INDEX OF DRAWINGS	S-21	APPROACH SLAB DETAILS
S-02	GENERAL PLAN AND CROSS SECTIONS	S-22	WEEPHOLE DETAILS
S-03	CONSTRUCTION PLAN STAGE 1	S-23	ASPHALTIC PLUG JOINT DETAILS
S-04	CONSTRUCTION PLAN STAGE 2	S-24	TWO TUBE BRIDGE RAILING DETAILS
S-05	CONSTRUCTION PLAN STAGE 3	S-25	CHAIN LINK FENCE DETAILS
S-06	EXISTING ABUTMENT DEMOLITION		
S-07	BENT BEAM AND BOLSTER DETAILS		
S-08	ABUTMENT RECONSTRUCTION		
S-09	ABUTMENT REINFORCEMENT		
S-10	MERRITT PARKWAY BARRIER		
S-11	ENDBLOCK AND WINGWALL MODIFICATION		
S-12	APPROXIMATE SUBSTRUCTURE DETERIORATION		
S-13	CONCRETE PATCHING DETAILS		
S-14	FIXED BEARING DETAILS		
S-15	EXPANSION BEARING DETAILS		
S-16	FRAMING PLAN AND GIRDER PROFILE		
S-17	MISCELLANEOUS STEEL DETAILS - 1		
S-18	MISCELLANEOUS STEEL DETAILS - 2		
S-19	DECK SLAB DETAILS		
S-20	SLAB ELEVATIONS		

THE DESIGN APPEARS TO CONFORM TO APPLICABLE CRITERIA. APPROVAL IS NOT TO BE CONSTRUED TO MEAN THAT ALL APSECTS OF THE DESIGN HAVE BEEN PERSONALLY CHECKED BY THE UNDERSIGNED.

Mary E. Baker, P.E.
2017.07.19
13:21:07-04'00'

TRANSPORTATION PRINCIPAL ENGINEER

REV.	DATE	REVISION DESCRIPTION	SHEET NO.

THE INFORMATION, INCLUDING ESTIMATED QUANTITIES OF WORK, SHOWN ON THESE SHEETS IS BASED ON LIMITED INVESTIGATIONS BY THE STATE AND IS IN NO WAY WARRANTED TO INDICATE THE CONDITIONS OF ACTUAL QUANTITIES OF WORK WHICH WILL BE REQUIRED.

Plotted Date: 7/18/2017

DESIGNER/DRAFTER: JWP
CHECKED BY: SAB
SCALE AS NOTED

STATE OF CONNECTICUT
DEPARTMENT OF TRANSPORTATION

Filename: ...\0102-0356_S-01_Index_of_Drawings.dgn

SIGNATURE/BLOCK:
OFFICE OF ENGINEERING
APPROVED BY:

PROJECT TITLE:
REHABILITATION OF BRIDGE NO. 00722 WEST ROCKS RD. OVER ROUTE 15

TOWN: NORWALK

DRAWING TITLE: STRUCTURES INDEX OF DRAWINGS

PROJECT NO. 0102-0356
DRAWING NO. S-01
SHEET NO. 04.01

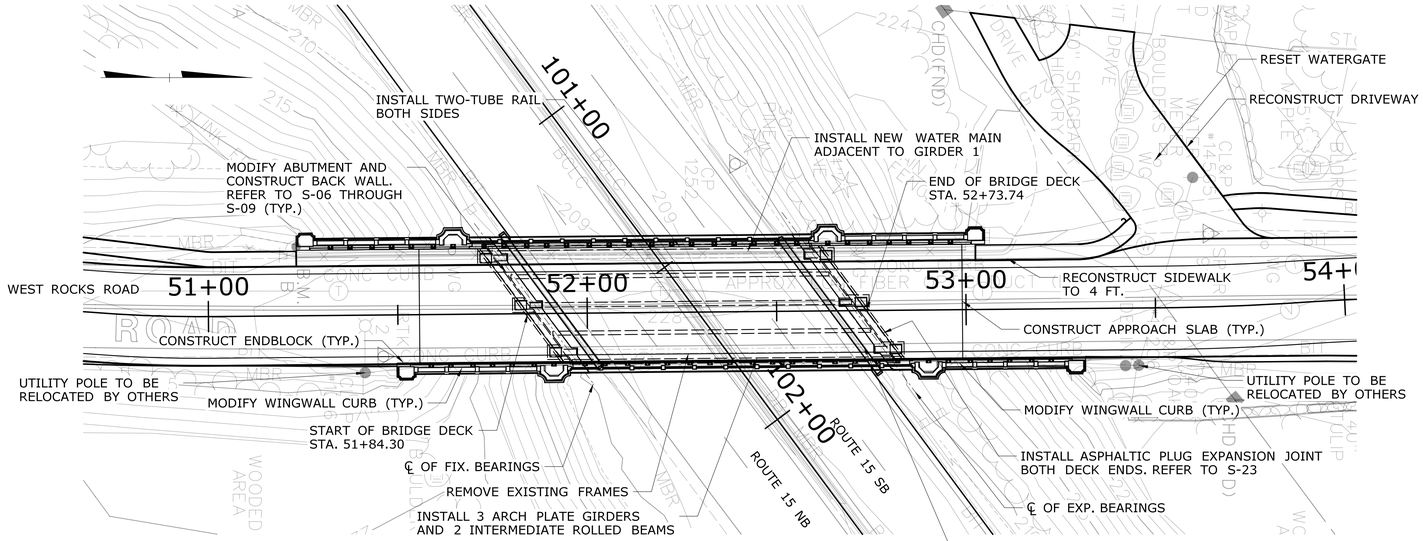

GENERAL PLAN VIEW
BRIDGE NO. 00722

SCALE: 1" = 20'

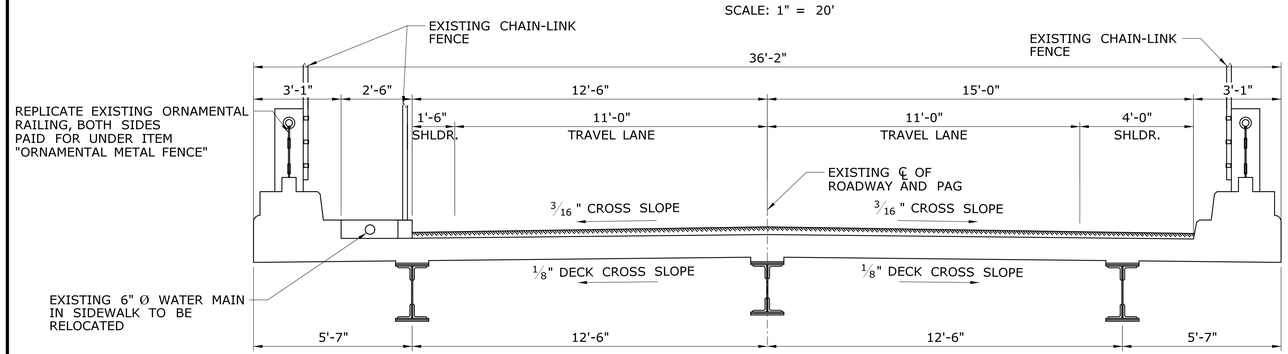

EXISTING CROSS SECTION
LOOKING NORTH

SCALE: 3/8" = 1'-0"

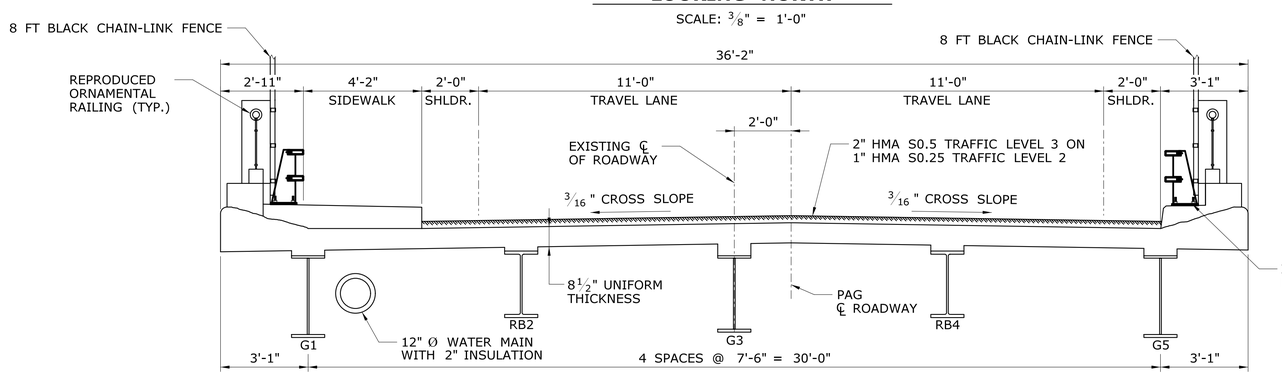

PROPOSED CROSS SECTION
LOOKING NORTH

SCALE: 3/8" = 1'-0"

GENERAL NOTES

SPECIFICATIONS: CONNECTICUT DEPARTMENT OF TRANSPORTATION FORM 817 DATED 2016, JANUARY 2017 SUPPLEMENTALS, AND SPECIAL PROVISIONS.

DESIGN SPECIFICATIONS: AASHTO LRFD BRIDGE DESIGN SPECIFICATIONS 7th ed. FOR HIGHWAY BRIDGES (AASHTO-2014) AND 2016 INTERIM REVISION, AS SUPPLEMENTED BY THE CONNECTICUT DEPARTMENT OF TRANSPORTATION BRIDGE DESIGN MANUAL - 2003 WITH 2011 INTERIM REVISION.

ALLOWABLE DESIGN STRESSES:
STRUCTURAL STEEL - AASHTO M270, GRADE 50 T2, BASED ON FY = 50,000 PSI

CLASS "F" CONCRETE: BASED ON F_c' = 4,000 PSI
CLASS "C" CONCRETE - REPLICATED: BASED ON F_c' = 3,000 PSI
CLASS "S" CONCRETE FOR HISTORIC BRIDGES: BASED ON F_c' = 3,000 PSI
REINFORCEMENT - ASTM A615: BASED ON F_y = 60,000 PSI

THE SPECIFIED CONCRETE STRENGTH USED IN DESIGN, F_c', OF THE CONCRETE COMPONENTS IS NOTED ABOVE. THE MINIMUM COMPRESSIVE STRENGTH OF THE CONCRETE IN THE CONSTRUCTED COMPONENTS SHALL CONFORM TO THE REQUIREMENTS OF 'SECTION 6.01 CONCRETE FOR STRUCTURES'.

OVERLAY: THE BITUMINOUS CONCRETE OVERLAY SHALL CONSIST OF THE FOLLOWING:
2" HMA S0.5 TRAFFIC LEVEL 3 ON
1" HMA S0.25 TRAFFIC LEVEL 2

LIVE LOAD: HL-93

FUTURE PAVING ALLOWANCE: NONE

PAINT: PAINT FOR STRUCTURAL STEEL SHALL CONFORM TO THE REQUIREMENTS OF THE SPECIAL PROVISION "STRUCTURAL STEEL (SITE NO. 1)". PAINT FOR THE REPRODUCED ORNAMENTAL METAL SHALL CONFORM TO THE SPECIAL PROVISION "ORNAMENTAL METAL FENCE". THE COLOR OF THE TOPCOAT MATERIAL SHALL BE AS DETERMINED BY TESTING. TESTING OF THE PAINT OF EACH COMPONENT SHALL BE PAID FOR UNDER THE CORRESPONDING ITEM. THE STRUCTURAL COATING SHALL HAVE A UNIFORM FINISH.

DIMENSIONS: WHEN DECIMAL DIMENSIONS ARE GIVEN TO LESS THAN THREE DECIMAL PLACES, THE OMITTED DIGITS SHALL BE ASSUMED TO BE ZEROS.

EXISTING DIMENSIONS: DIMENSIONS OF THE EXISTING STRUCTURE SHOWN ON THESE PLANS ARE FOR GENERAL REFERENCE ONLY. THEY HAVE BEEN TAKEN FROM THE ORIGINAL DESIGN DRAWINGS AND ARE NOT GUARANTEED. THE CONTRACTOR SHALL TAKE ALL FIELD MEASUREMENTS NECESSARY TO ASSURE PROPER FIT OF THE FINISHED WORK AND SHALL ASSUME FULL RESPONSIBILITY FOR THEIR ACCURACY.

COMPOSITE CONSTRUCTION:
CONSTRUCTION LOADS AND DEAD LOADS (INCLUDING PARAPETS) WILL BE PERMITTED WHEN DIRECTED BY THE ENGINEER BUT ONLY WHEN THE CONCRETE HAS REACHED A STRENGTH OF F_c' = 3500 PSI. LIVE LOADS (TRAFFIC) WILL BE PERMITTED ON THE STRUCTURE AFTER THE CONCRETE HAS REACHED A STRENGTH OF F_c'=4400 PSI

CLASS "F" CONCRETE: CLASS "F" CONCRETE SHALL BE USED FOR THE DECK SLAB, PARAPETS, AND APPROACH SLABS

CLASS "C" CONCRETE - REPLICATED: CLASS "C" CONCRETE - REPLICATED SHALL BE USED FOR MODIFICATIONS TO ABUTMENTS, WINGWALL CURB RECONSTRUCTION AND CONSTRUCTION OF ENDBLOCKS.

STAY-IN-PLACE FORMS: THE USE OF STAY-IN-PLACE FORMS ON THIS STRUCTURE IS NOT ALLOWED.

CONSTRUCTION JOINTS: CONSTRUCTION JOINTS OTHER THAN THOSE SHOWN ON THE PLANS WILL NOT BE PERMITTED WITHOUT PRIOR APPROVAL OF THE ENGINEER.

EXPOSED EDGES: EXPOSED EDGES OF CONCRETE SHALL BE BEVELED 1" X 1" UNLESS OTHERWISE NOTED

CONCRETE COVER: ALL REINFORCEMENT SHALL HAVE TWO INCHES COVER UNLESS DIMENSIONED OTHERWISE

REINFORCEMENT: ALL REINFORCEMENT SHALL BE ASTM A615 GRADE 60 ALL REINFORCEMENT IN THE SUPERSTRUCTURE INCLUDING THE CONCRETE DECK SLAB, THE PARAPETS, AND THE NEW APPROACH SLABS SHALL BE GALVANIZED UNLESS OTHERWISE NOTED. THESE BARS SHALL BE INCLUDED IN THE PAY ITEM FOR "DEFORMED STEEL BARS-GALVANIZED". ALL REINFORCEMENT IN THE SUBSTRUCTURE SHALL BE UNCOATED BLACK BAR.

MEMBRANE WATERPROOFING (COLD LIQUID ELASTOMERIC): COLD LIQUID ELASTOMERIC SHALL BE PLACED ON THE BRIDGE DECK AND APPROACH SLABS AFTER THEY HAVE BEEN POURED AND CURED. THE COLD LIQUID ELASTOMERIC SHALL EXTEND 2"± UP THE CURBS.

THE GIRDER WEBS SHALL BE PLUMB UNDER FULL DEAD LOAD CONDITION.

THE CONTRACTOR SHALL SUBMIT ALL DEMOLITION PROCEDURES TO THE ENGINEER FOR APPROVAL.

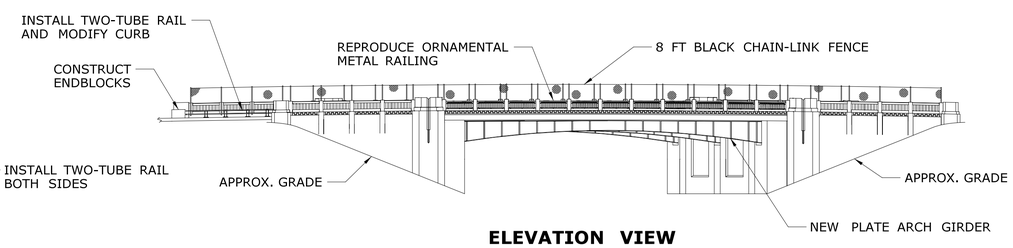

ELEVATION VIEW
BRIDGE NO. 00722

SCALE: 1" = 20'

REV.	DATE	REVISION DESCRIPTION	SHEET NO.

THE INFORMATION, INCLUDING ESTIMATED QUANTITIES OF WORK, SHOWN ON THESE SHEETS IS BASED ON LIMITED INVESTIGATIONS BY THE STATE AND IS IN NO WAY WARRANTED TO INDICATE THE CONDITIONS OF ACTUAL QUANTITIES OF WORK WHICH WILL BE REQUIRED.

Plotted Date: 7/18/2017

DESIGNER/DRAFTER: JWP
CHECKED BY: SAB
SCALE AS NOTED

STATE OF CONNECTICUT
DEPARTMENT OF TRANSPORTATION

Filename: ...\0102-0356_S-02_General_Plan.dgn

SIGNATURE/BLOCK:
OFFICE OF ENGINEERING
APPROVED BY:

PROJECT TITLE:
REHABILITATION OF BRIDGE NO. 00722
WEST ROCKS RD. OVER ROUTE 15

TOWN: NORWALK

DRAWING TITLE:
GENERAL PLAN AND CROSS SECTIONS

PROJECT NO. 0102-0356
DRAWING NO. S-02
SHEET NO. 04.02

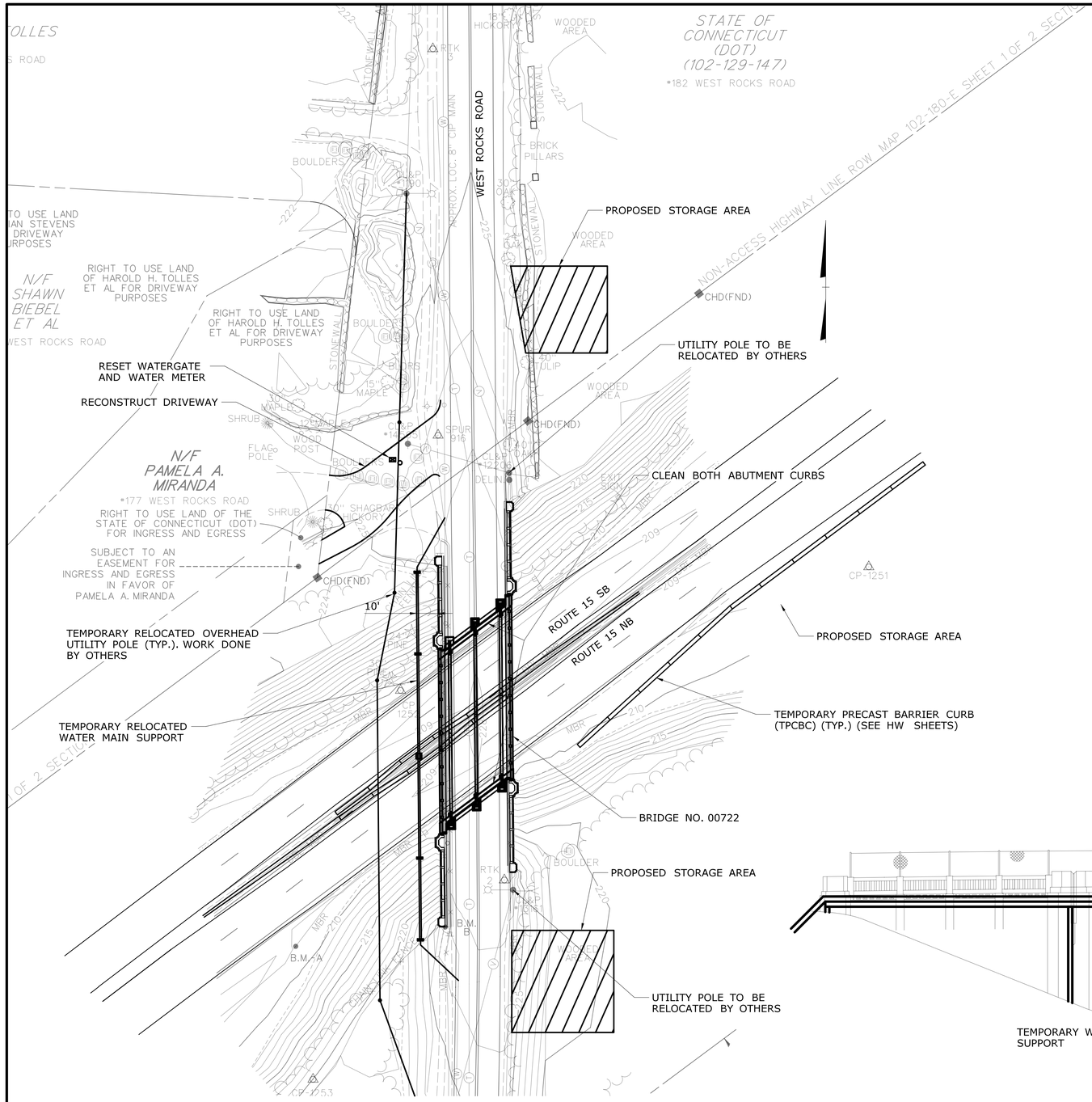

PROPOSED CONSTRUCTION PLAN STAGE 1

SCALE: 1' = 30'

STAGE 1: PRE-CLOSURE OF WEST ROCKS ROAD

1. MOBILIZATION; ERECT CONSTRUCTION SIGNS
2. CLEARING, TRIMMING, AND GRUBBING
3. RESET WATERGATE, WATER METER, AND UTILITY POLE NEAR ADJACENT DRIVEWAY
4. RECONSTRUCT ADJACENT DRIVEWAY
5. RELOCATE OVERHEAD UTILITY POLES AND OVERHEAD UTILITIES. WORK TO BE DONE BY OTHERS.
6. CONSTRUCT TEMPORARY SUPPORT FOR RELOCATED WATER MAIN AND ATTACH RELOCATED WATER MAIN PIPE. VERTICAL CLEARANCE FROMMERRITT PARKWAY TO TEMPORARY SUPPORT SHALL BE NO LESS THAN 16'-6" FROM TOP OF ROADWAY.
7. DIVERT WATER FLOW TO TEMPORARY RELOCATED WATER MAIN.
8. CLEAN BULK OF DEBRIS FROM BOTH ABUTMENT CURBS FOR MERRITT PARKWAY BARRIER AND LOCATE EXISTING WEEPHOLES. SHOULD THE CONTRACTOR BE UNABLE TO LOCATE EXISTING WEEPHOLES OR THE EXISTING WEEPHOLES ARE OBSTRUCTED, THE DETAILS FOR WEEPHOLES PROVIDED IN THIS CONTRACT SHALL BE USED. SHOULD THE WEEPHOLES BE LOCATED AND UNOBSTRUCTED, THE WEEPHOLES SHOWN IN THESE PLANS SHALL BE OMITTED AND THE EXCAVATION DEPTH RAISED TO THE BOTTOM OF PROPOSED BACKWALL.
9. INSTALL DEBRIS SHIELD. MINIMUM VERTICAL CLEARANCE FROM TOP OF ROADWAY TO BOTTOM OF DEBRIS SHIELD SHALL BE 12'-0".

CONSTRUCTION SEQUENCE GENERAL NOTES:

1. THE SUGGESTED STEPS ILLUSTRATE A SEQUENCE OF CONSTRUCTION THAT CONFORMS TO STAGING REQUIREMENTS. THE SEQUENCE MAY BE ALTERED, SUBJECT TO THE APPROVAL OF THE ENGINEER SO LONG AS THE OPERATION OF VEHICULAR TRAFFIC IS MAINTAINED.
2. NEITHER THE WORK NOR STEPS LISTED IN THE CONSTRUCTION SEQUENCE ARE INTENDED TO COVER ALL DETAILS OF THE WORK. THE CONTRACTOR SHALL PREPARE A DETAILED CONSTRUCTION SEQUENCE AND SCHEDULE FOR REVIEW AND APPROVAL BY THE ENGINEER
3. THE CONTRACTOR IS HEREIN NOTIFIED THAT THE OVERHEAD ELECTRICAL FACILITIES WILL REMAIN LIVE THROUGHOUT THE DURATION OF CONSTRUCTION.
4. THE CONTRACTOR SHALL COORDINATE ALL WORK WITH THE OVERHEAD POWER FACILITIES AND UNDERGROUND WATER MAIN COMPANY.
5. THE SHOULDER WIDTH ADJACENT TO THE TEMPORARY PRECAST CONCRETE BARRIER CURB SHALL BE A MINIMUM OF 1 FT. REFER TO HIGHWAY AND TRAFFIC SHEETS.
6. THE TEMPORARY WATER MAIN SUPPORT SHOWN IS FOR GENERAL REFERENCE ONLY. THE TEMPORARY WATER MAIN SUPPORT SHALL BE DESIGNED AND INSTALLED BY THE CONTRACTOR AND COORDINATED WITH FIRST DISTRICT WATER DEPARTMENT (FDWD). THE CONTRACTOR SHALL PROVIDE THE STATE AND FDWD WITH DRAWINGS FOR REVIEW AND APPROVAL PRIOR TO INSTALLATION.
7. MATERIALS FOR THE TEMPORARY RELOCATED WATER MAIN ARE TO BE SUPPLIED BY FIRST DISTRICT WATER DEPARTMENT AND INSTALLED BY THE CONTRACTOR. MATERIALS FOR THE TEMPORARY WATER MAIN SUPPORT ARE TO BE SUPPLIED BY THE CONTRACTOR.
8. THE TEMPORARY WATER MAIN SUPPORT SHALL HAVE A MINIMUM VERTICAL CLEARANCE FROM THE TOP OF ROADWAY OF 16'-6".

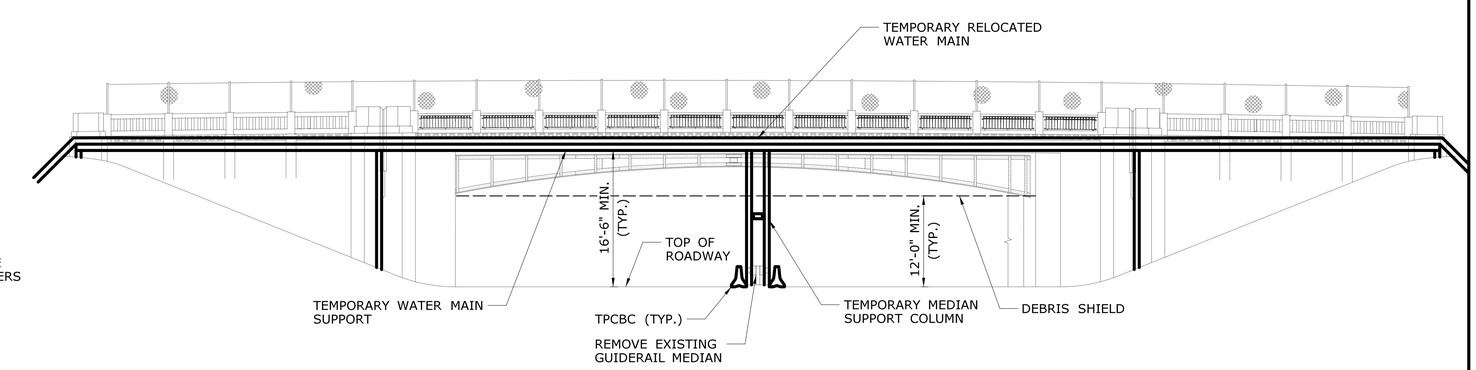

TEMPORARY WATER MAIN SUPPORT ELEVATION

SCALE: 1" = 10'

REV.	DATE	REVISION DESCRIPTION	SHEET NO.

THE INFORMATION, INCLUDING ESTIMATED QUANTITIES OF WORK, SHOWN ON THESE SHEETS IS BASED ON LIMITED INVESTIGATIONS BY THE STATE AND IS IN NO WAY WARRANTED TO INDICATE THE CONDITIONS OF ACTUAL QUANTITIES OF WORK WHICH WILL BE REQUIRED.

Plotted Date: 7/18/2017

DESIGNER/DRAFTER: JWP

CHECKED BY: SAB

SCALE AS NOTED

STATE OF CONNECTICUT
DEPARTMENT OF TRANSPORTATION

Filename: ...\0102-0356_S-03_ConstructionStaging1.dgn

SIGNATURE/BLOCK: OFFICE OF ENGINEERING

APPROVED BY: Mary E. Bach

PROJECT TITLE: REHABILITATION OF BRIDGE NO. 00722 WEST ROCKS RD. OVER ROUTE 15

TOWN: NORWALK

DRAWING TITLE: CONSTRUCTION PLAN STAGE 1

PROJECT NO. 0102-0356

DRAWING NO. S-03

SHEET NO. 04.03

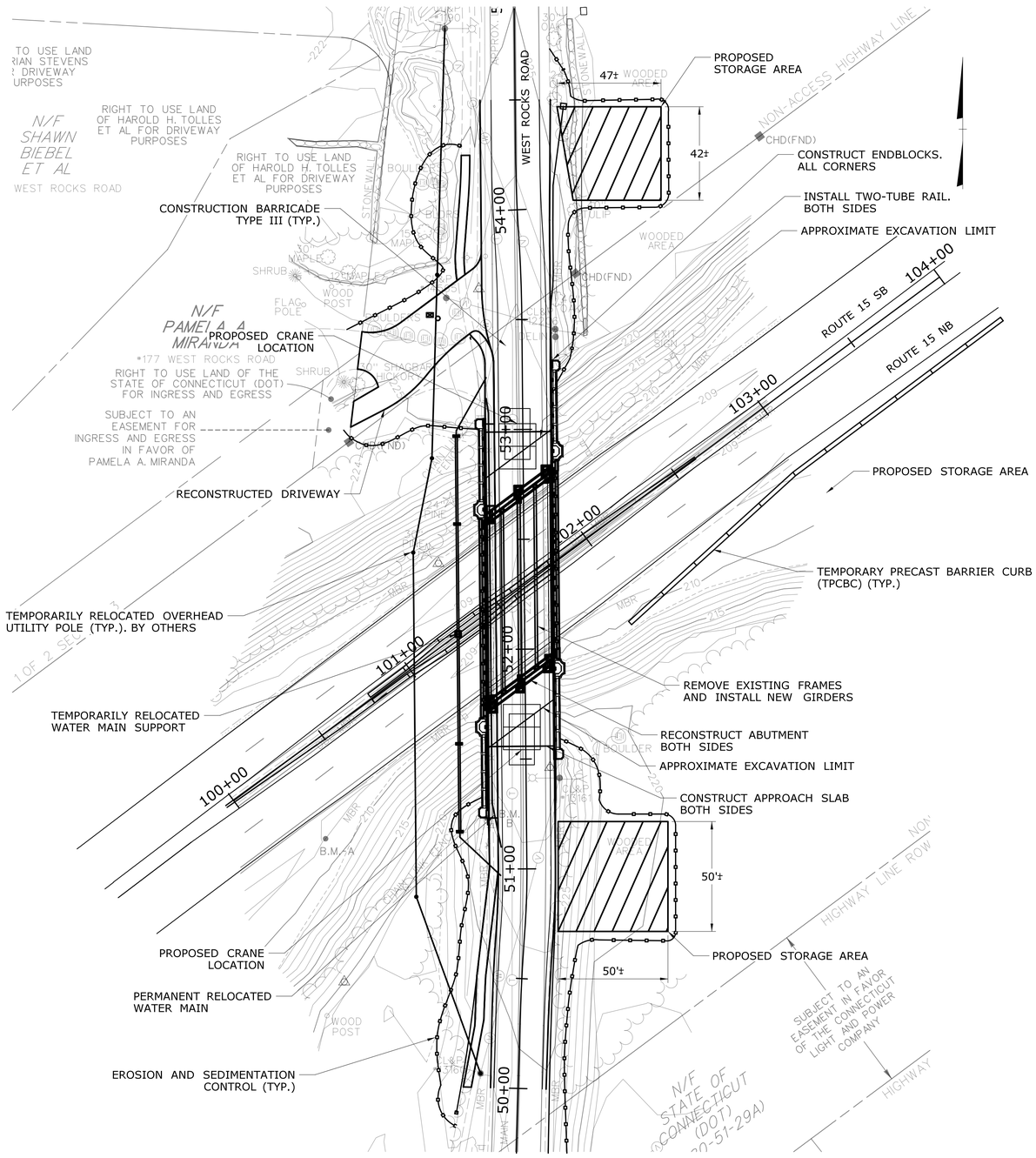

PROPOSED CONSTRUCTION PLAN
STAGE 2
SCALE: 1' = 30'

STAGE 2: CLOSURE OF WEST ROCKS ROAD

10. IMPLEMENT DETOUR AND PLACEMENT OF CONSTRUCTION BARRICADES
11. REMOVE EXISTING DECK
12. REMOVE DEBRIS SHIELD, CUT EXISTING FRAMES AT FACE OF CONCRETE AND REMOVE. PRIOR TO ANY STEEL CUTTING THE PAINT SHALL BE REMOVED IN ACCORDANCE WITH THE SPECIAL PROVISIONS "LEAD COMPLIANCE FOR MISCELLANEOUS EXTERIOR TASKS".
13. REMOVE PORTION OF EXISTING ABUTMENT AND FRAME LEGS AS INDICATED ON S-06
14. INSTALL BOLSTER AND BENT BEAM
15. EXCAVATE AND REMOVE PORTION OF EXISTING ABUTMENT
16. PATCH EXISTING ABUTMENT AND EXISTING WINGWALLS
17. RECONSTRUCT ABUTMENT AND BACKWALL WITH SLEEVE FOR PERMANENT 12" WATER MAIN AND 2" INSULATION
18. INSTALL BEARINGS
19. INSTALL NEW GIRDERS AND DIAPHRAGMS
20. INSTALL PERMANENT 12" WATER MAIN THROUGH ABUTMENT SLEEVE
21. DIVERT WATER FLOW INTO PERMANENT WATER MAIN
22. CONSTRUCT CONCRETE DECK, ORNAMENTAL PARAPET AND INSTALL ORNAMENTAL RAILING
23. CONSTRUCT APPROACH SLAB
24. RECONSTRUCT WINGWALL CURB AND CONSTRUCT ENDBLOCKS
25. CONSTRUCT SIDEWALK
26. INSTALL WATERPROOFING MEMBRANE AND PAVE
27. INSTALL TWO-TUBE RAILING
28. REOPEN BRIDGE TO TRAFFIC

CONSTRUCTION SEQUENCE GENERAL NOTES:

1. THE SUGGESTED STEPS ILLUSTRATE A SEQUENCE OF CONSTRUCTION THAT CONFORMS TO STAGING REQUIREMENTS. THE SEQUENCE MAY BE ALTERED, SUBJECT TO THE APPROVAL OF THE ENGINEER SO LONG AS THE OPERATION OF VEHICULAR TRAFFIC IS MAINTAINED.
2. NEITHER THE WORK NOR STEPS LISTED IN THE CONSTRUCTION SEQUENCE ARE INTENDED TO COVER ALL DETAILS OF THE WORK. THE CONTRACTOR SHALL PREPARE A DETAILED CONSTRUCTION SEQUENCE AND SCHEDULE FOR REVIEW AND APPROVAL BY THE ENGINEER
3. THE CONTRACTOR IS HEREIN NOTIFIED THAT THE OVERHEAD ELECTRICAL FACILITIES WILL REMAIN LIVE THROUGHOUT THE DURATION OF CONSTRUCTION.
4. THE CONTRACTOR SHALL COORDINATE ALL WORK WITH THE OVERHEAD POWER FACILITIES AND UNDERGROUND WATER MAIN COMPANY.
5. THE SHOULDER WIDTH ADJACENT TO THE TEMPORARY PRECAST CONCRETE BARRIER CURB SHALL BE A MINIMUM OF 1 FT. REFER TO HIGHWAY AND TRAFFIC SHEETS.

REV.	DATE	REVISION DESCRIPTION	SHEET NO.

THE INFORMATION, INCLUDING ESTIMATED QUANTITIES OF WORK, SHOWN ON THESE SHEETS IS BASED ON LIMITED INVESTIGATIONS BY THE STATE AND IS IN NO WAY WARRANTED TO INDICATE THE CONDITIONS OF ACTUAL QUANTITIES OF WORK WHICH WILL BE REQUIRED.

Plotted Date: 7/18/2017

DESIGNER/DRAFTER: JWP
CHECKED BY: SAB
SCALE AS NOTED

STATE OF CONNECTICUT
DEPARTMENT OF TRANSPORTATION

Filename: ...\0102-0356..S-04..ConstructionStaging2.dgn

SIGNATURE/BLOCK:
OFFICE OF ENGINEERING
APPROVED BY:

PROJECT TITLE:
REHABILITATION OF BRIDGE NO. 00722
WEST ROCKS RD. OVER ROUTE 15

TOWN: NORWALK

DRAWING TITLE: CONSTRUCTION PLAN STAGE 2

PROJECT NO. 0102-0356
DRAWING NO. S-04
SHEET NO. 04.04

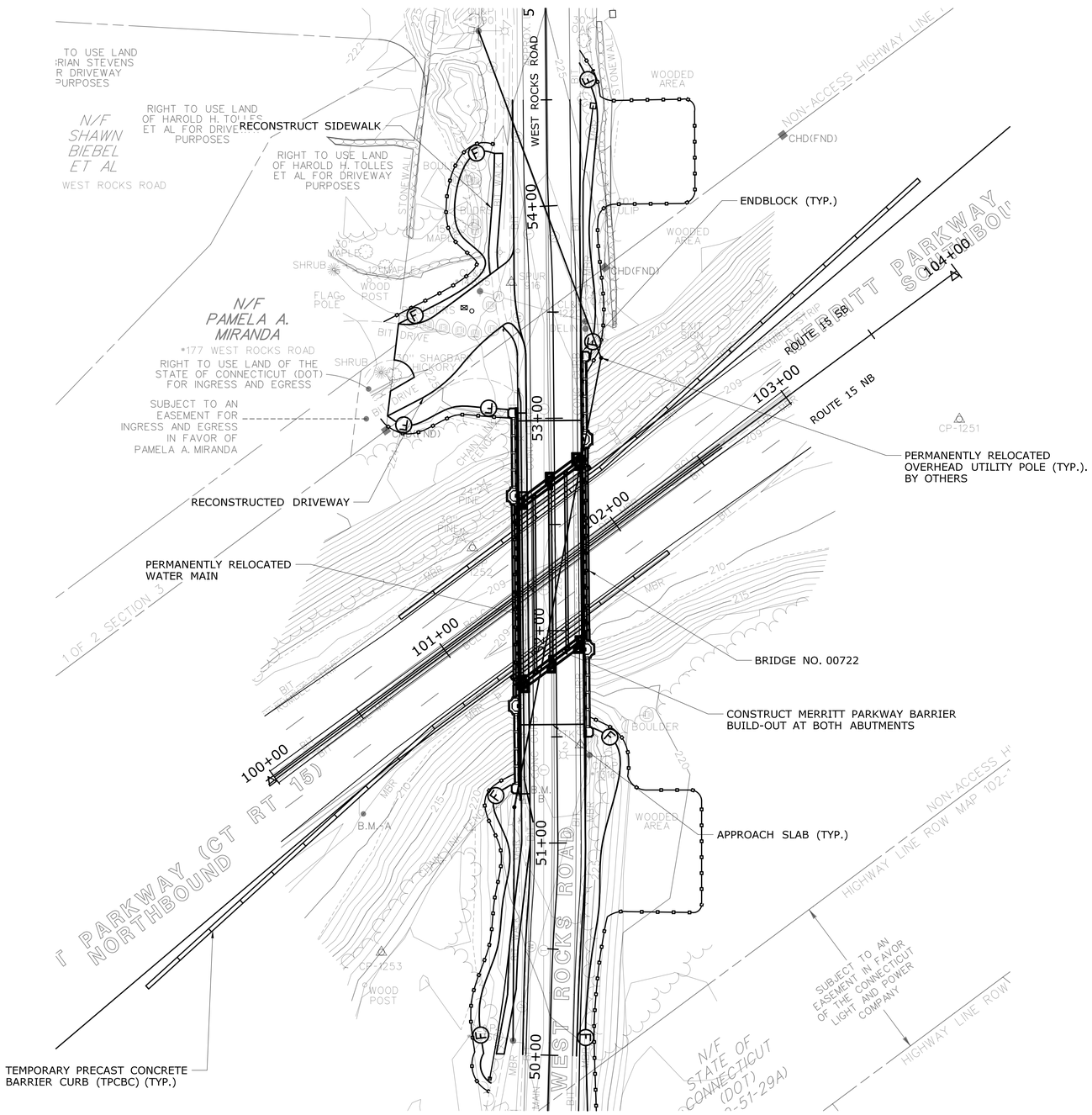

PROPOSED CONSTRUCTION PLAN
STAGE 3
SCALE: 1' = 30'

STAGE 3: OFF-PEAK ALTERNATING TRAFFIC AS NECESSARY

29. REMOVE TEMPORARY WATER MAIN AND TEMPORARY WATER MAIN SUPPORT. THE TEMPORARY WATER MAIN MATERIALS SHALL BE RETURNED TO THE FIRST DISTRICT WATER DEPARTMENT AFTER REMOVAL.
30. RELOCATE UTILITY POLES TO FINAL LOCATION. WORK DONE BY OTHERS.
31. INSTALL TEMPORARY PRECAST CONCRETE BARRIER CURB AT BOTH ABUTMENTS
32. CONSTRUCT MERRITT PARKWAY BARRIER BUILD-OUT AT BOTH ABUTMENTS
33. INCIDENTAL MISCELLANEOUS CONSTRUCTION INCLUDING CHAIN-LINK FENCE, PLANTING, FINAL GRADING, FINAL PAVEMENT, APJ AND PAVEMENT MARKINGS.

CONSTRUCTION SEQUENCE GENERAL NOTES:

1. THE SUGGESTED STEPS ILLUSTRATE A SEQUENCE OF CONSTRUCTION THAT CONFORMS TO STAGING REQUIREMENTS. THE SEQUENCE MAY BE ALTERED, SUBJECT TO THE APPROVAL OF THE ENGINEER SO LONG AS THE OPERATION OF VEHICULAR TRAFFIC IS MAINTAINED.
2. NEITHER THE WORK NOR STEPS LISTED IN THE CONSTRUCTION SEQUENCE ARE INTENDED TO COVER ALL DETAILS OF THE WORK. THE CONTRACTOR SHALL PREPARE A DETAILED CONSTRUCTION SEQUENCE AND SCHEDULE FOR REVIEW AND APPROVAL BY THE ENGINEER
3. THE CONTRACTOR IS HEREIN NOTIFIED THAT THE OVERHEAD ELECTRICAL FACILITIES WILL REMAIN LIVE THROUGHOUT THE DURATION OF CONSTRUCTION.
4. THE CONTRACTOR SHALL COORDINATE ALL WORK WITH THE OVERHEAD POWER FACILITIES AND UNDERGROUND WATER MAIN COMPANY.
5. THE SHOULDER WIDTH ADJACENT TO THE TEMPORARY PRECAST CONCRETE BARRIER CURB SHALL BE A MINIMUM OF 1 FT. REFER TO HIGHWAY AND TRAFFIC SHEETS.

REV.	DATE	REVISION DESCRIPTION	SHEET NO.

THE INFORMATION, INCLUDING ESTIMATED QUANTITIES OF WORK, SHOWN ON THESE SHEETS IS BASED ON LIMITED INVESTIGATIONS BY THE STATE AND IS IN NO WAY WARRANTED TO INDICATE THE CONDITIONS OF ACTUAL QUANTITIES OF WORK WHICH WILL BE REQUIRED.

Plotted Date: 7/18/2017

DESIGNER/DRAFTER: JWP
CHECKED BY: SAB
SCALE AS NOTED

STATE OF CONNECTICUT
DEPARTMENT OF TRANSPORTATION

Filename: ...\0102-0356_S-05_ConstructionStaging3.dgn

SIGNATURE/BLOCK: OFFICE OF ENGINEERING
APPROVED BY: Mary E. Beck

PROJECT TITLE: REHABILITATION OF BRIDGE NO. 00722 WEST ROCKS RD. OVER ROUTE 15

TOWN: NORWALK

DRAWING TITLE: CONSTRUCTION PLAN STAGE 3

PROJECT NO. 0102-0356
DRAWING NO. S-05
SHEET NO. 04.05

NOTE: THE CONTRACTOR SHALL HAVE A PUMP WITH A FLOAT SWITCH IN THE EVENT OF INCLEMENT WEATHER TO DEWATER BEHIND ABUTMENT DURING ABUTMENT MODIFICATION. THE COST OF THE PUMP AND DEWATERING SHALL BE PAID FOR UNDER THE ITEM "STRUCTURE EXCAVATION - EARTH (COMPLETE)".

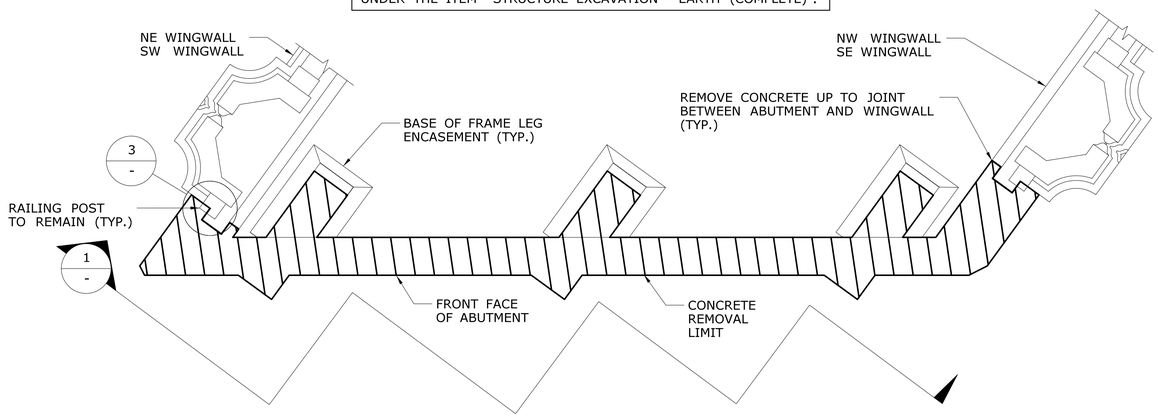

TYPICAL EXISTING ABUTMENT CONCRETE REMOVAL

SCALE: 1/4" = 1'-0"

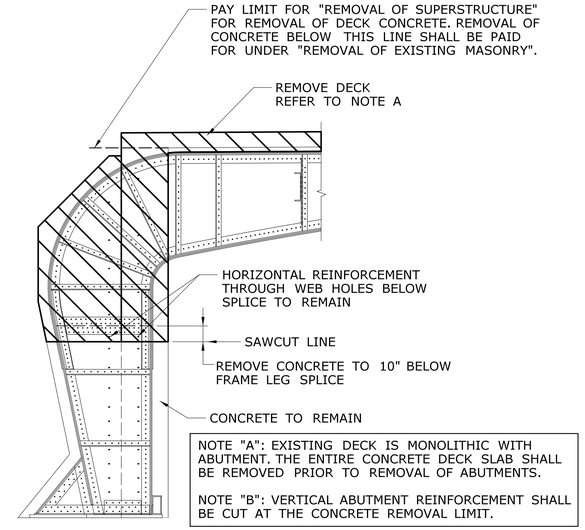

EXISTING ABUTMENT SECTION AT FRAME CONCRETE REMOVAL 2 -

SCALE: 1/4" = 1'-0"

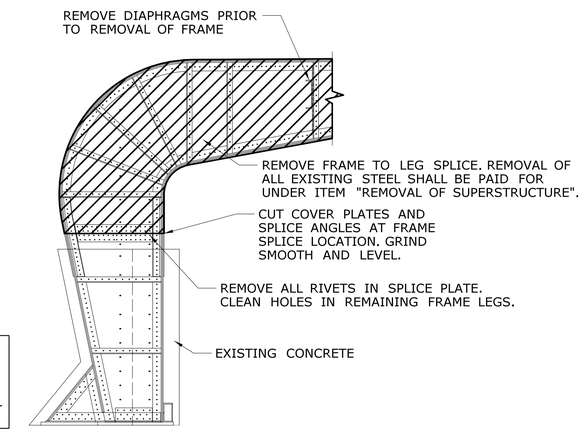

EXISTING ABUTMENT SECTION AT FRAME FRAME REMOVAL 2 -

SCALE: 1/4" = 1'-0"

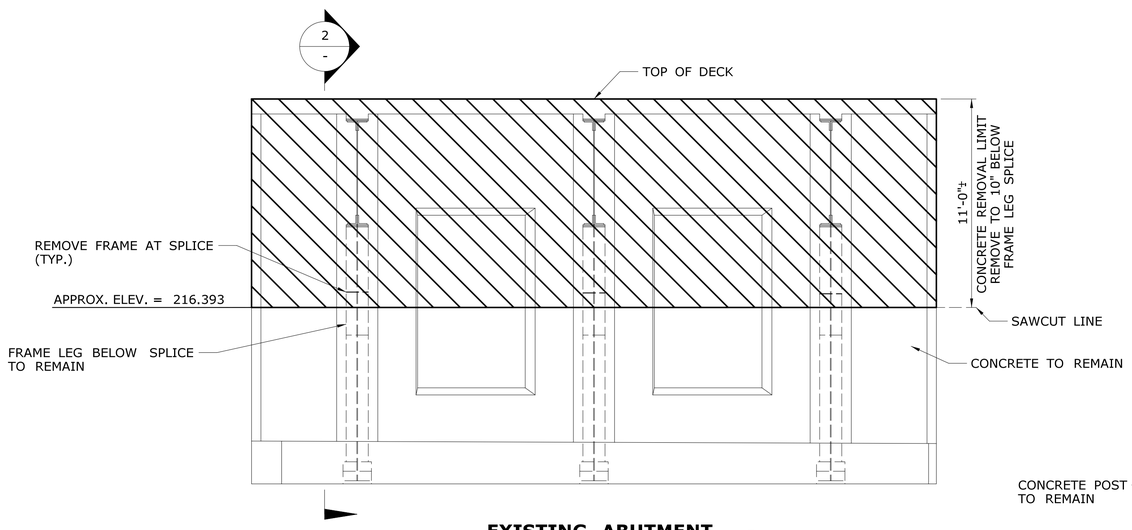

EXISTING ABUTMENT ELEVATION 1 -

SCALE: 1/4" = 1'-0"

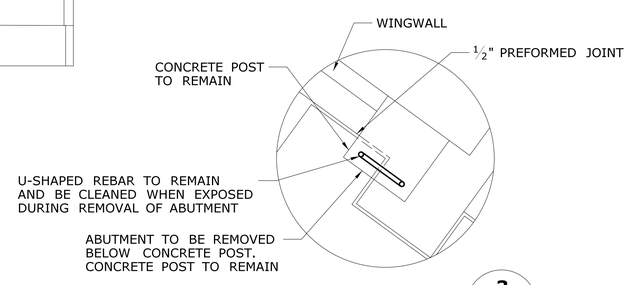

ABUTMENT JOINT DETAIL 3 -

SCALE: 1" = 1'-0"

NOTE: ACUTE CORNER SHOWN. OBTUSE CORNER SIMILAR.

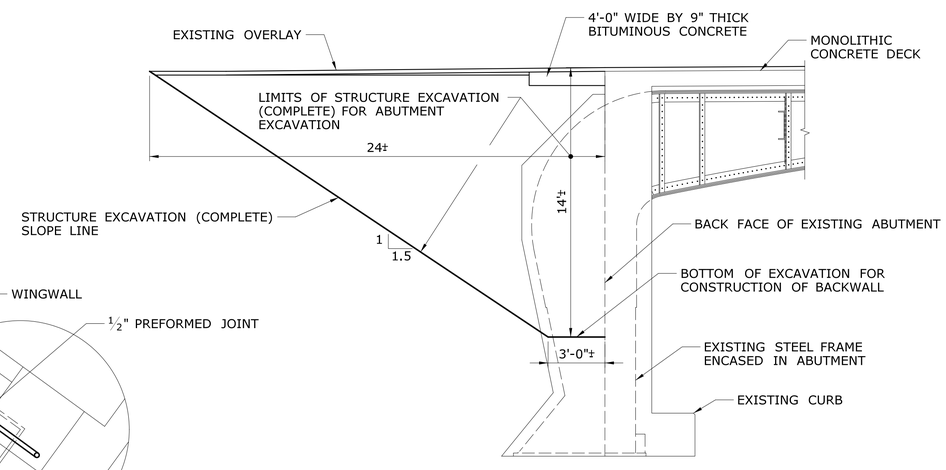

EXISTING ABUTMENT EXCAVATION LIMITS

SCALE: 1/4" = 1'-0"

REV.	DATE	REVISION DESCRIPTION	SHEET NO.

THE INFORMATION, INCLUDING ESTIMATED QUANTITIES OF WORK, SHOWN ON THESE SHEETS IS BASED ON LIMITED INVESTIGATIONS BY THE STATE AND IS IN NO WAY WARRANTED TO INDICATE THE CONDITIONS OF ACTUAL QUANTITIES OF WORK WHICH WILL BE REQUIRED.

Plotted Date: 7/18/2017

DESIGNER/DRAFTER: JWP

CHECKED BY: SAB

SCALE AS NOTED

STATE OF CONNECTICUT
DEPARTMENT OF TRANSPORTATION

Filename: ...\0102-0356..S-06..Abutment1.dgn

SIGNATURE/BLOCK:
OFFICE OF ENGINEERING

APPROVED BY:

PROJECT TITLE:
REHABILITATION OF BRIDGE NO. 00722
WEST ROCKS RD. OVER ROUTE 15

TOWN: NORWALK

DRAWING TITLE: EXISTING ABUTMENT DEMOLITION

PROJECT NO. 0102-0356

DRAWING NO. S-06

SHEET NO. 04.06

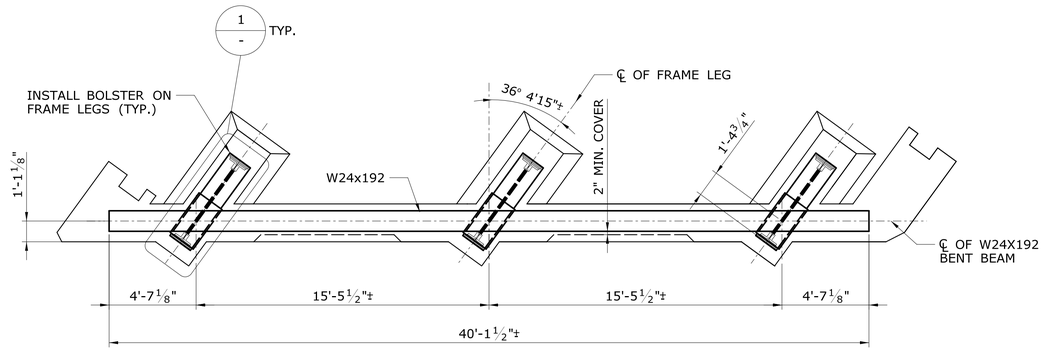

ABUTMENT BENT BEAM PLAN VIEW

SCALE: 1/4" = 1'-0"

BENT BEAM AND BOLSTER NOTES

1) ALL FAYING SURFACES SHALL BE CLEANED OF ALL RUST, BURRS, CONCRETE, ETC. PRIOR TO BOLTING.

2) THE CONTRACTOR SHALL FLAME CUT THE EXISTING FRAME LEGS AT THE EXISTING SPLICE. THE ORIGINAL PLANS INDICATE THAT NO PAINT IS PRESENT ON THE EXISTING FRAME LEGS. SHOULD PAINT BE ENCOUNTERED, THE PAINT SHALL BE REMOVED ACCORDING TO THE SPECIAL PROVISION "LEAD COMPLIANCE FOR MISCELLANEOUS EXTERIOR TASKS".

3) ALL CUT PLATES SHALL BE GROUND SMOOTH AND LEVEL PRIOR TO INSTALLATION OF BOLSTER TO ALLOW FOR AN EVEN BEARING SURFACE.

4) THE CONTRACTOR SHALL FIELD DRILL HOLES IN THE BOLSTER CONNECTION PLATES TO MATCH THE LOCATION OF HOLES IN THE EXISTING/REMAINING FRAME LEGS. IT IS RECOMMENDED THAT THE CONTRACTOR CREATE A TEMPLATE OF THE EXISTING HOLE CONFIGURATION AFTER REMOVAL OF TOP PORTION OF SPLICE. THIS TEMPLATE SHALL BE USED FOR ACCURATELY LOCATING THE HOLES TO BE FIELD DRILLED. FLAME CUTTING HOLES IS NOT ALLOWED. AFTER DRILLING ALL SURFACES SHALL BE THOROUGHLY CLEANED OF ALL DRILLING OIL, CONCRETE, ETC. PRIOR TO INSTALLATION.

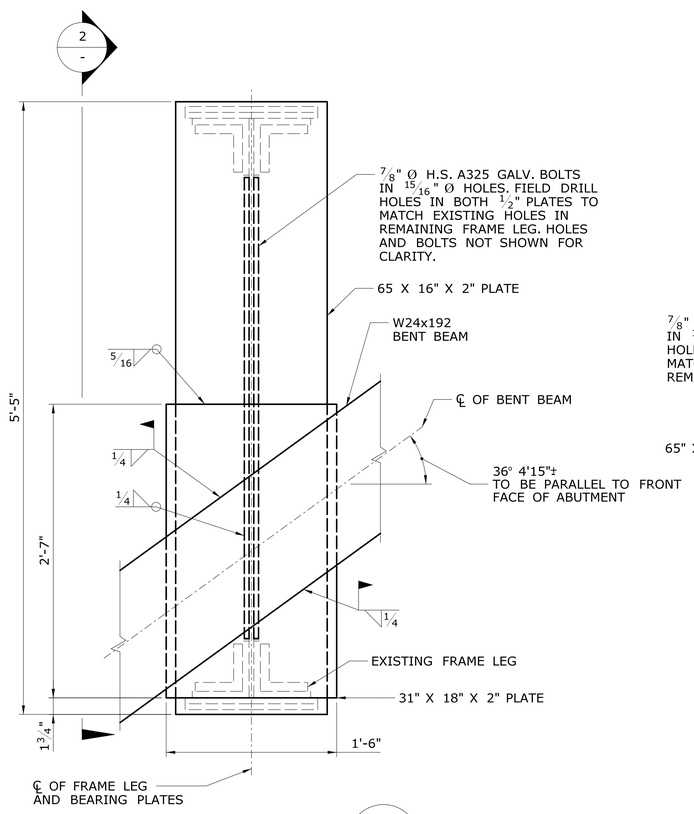

BOLSTER PLAN VIEW 1 -

SCALE: 1 1/2" = 1'-0"

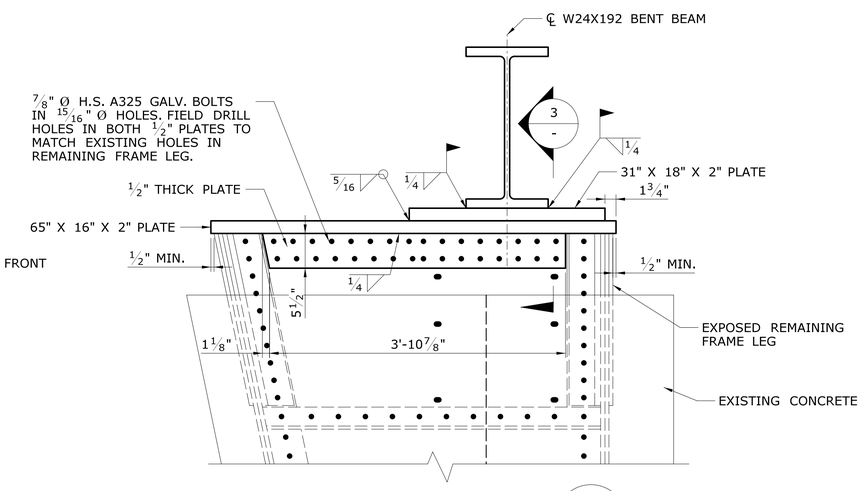

BOLSTER ELEVATION 2 -

SCALE: 1" = 1'-0"

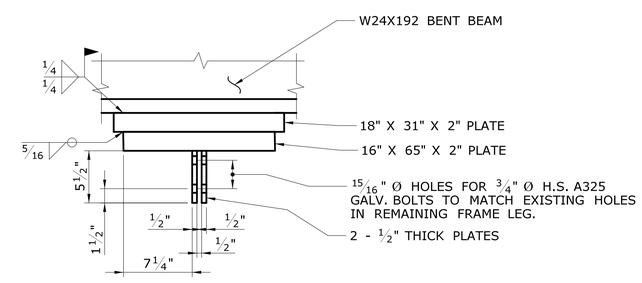

BOLSTER SECTION 3 -

SCALE: 1 1/2" = 1'-0"

REV.	DATE	REVISION DESCRIPTION	SHEET NO.

THE INFORMATION, INCLUDING ESTIMATED QUANTITIES OF WORK, SHOWN ON THESE SHEETS IS BASED ON LIMITED INVESTIGATIONS BY THE STATE AND IS IN NO WAY WARRANTED TO INDICATE THE CONDITIONS OF ACTUAL QUANTITIES OF WORK WHICH WILL BE REQUIRED.

Plotted Date: 7/18/2017

DESIGNER/DRAFTER: JWP

CHECKED BY: SAB

SCALE AS NOTED

STATE OF CONNECTICUT
DEPARTMENT OF TRANSPORTATION

Filename: ...\0102-0356_S-07_BentBeam.dgn

SIGNATURE/BLOCK: OFFICE OF ENGINEERING

APPROVED BY: Mary E. Beck

PROJECT TITLE: REHABILITATION OF BRIDGE NO. 00722 WEST ROCKS RD. OVER ROUTE 15

TOWN: NORWALK

DRAWING TITLE: BENT BEAM AND BOLSTER DETAILS

PROJECT NO. 0102-0356

DRAWING NO. S-07

SHEET NO. 04.07

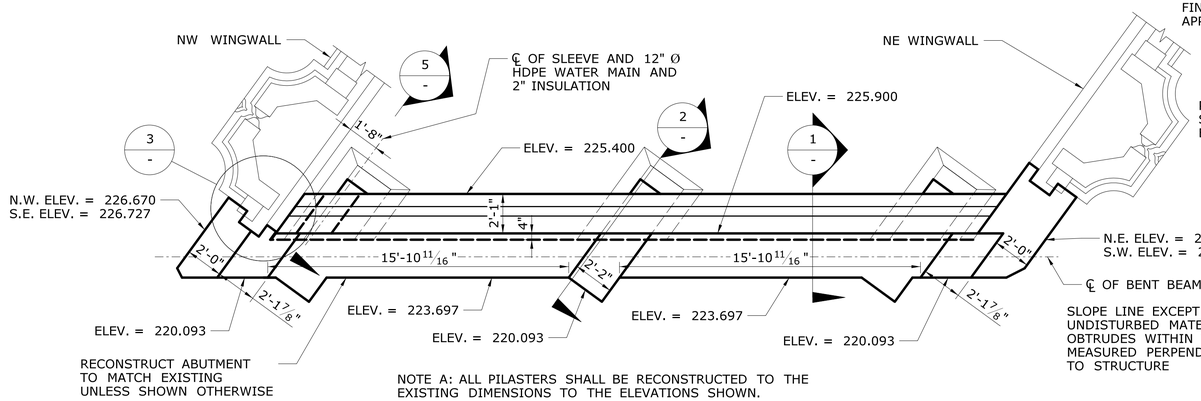

NOTE A: ALL PILASTERS SHALL BE RECONSTRUCTED TO THE EXISTING DIMENSIONS TO THE ELEVATIONS SHOWN.

NOTE B: NORTH ABUTMENT SHOWN. SOUTH ABUTMENT SIMILAR.

RECONSTRUCTED ABUTMENT PLAN VIEW

SCALE: 1/4" = 1'-0"

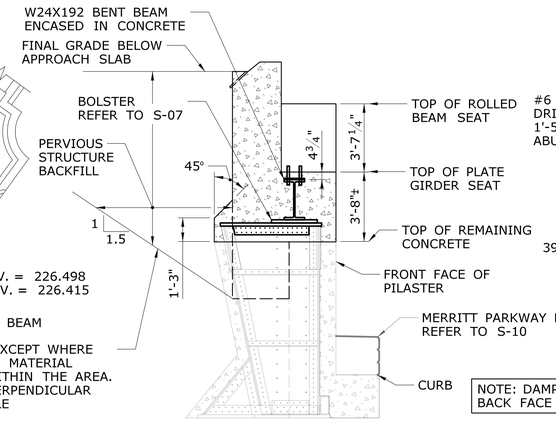

RECONSTRUCTED ABUTMENT SECTION AT FRAME LEG (2 / -)

SCALE: 1/4" = 1'-0"

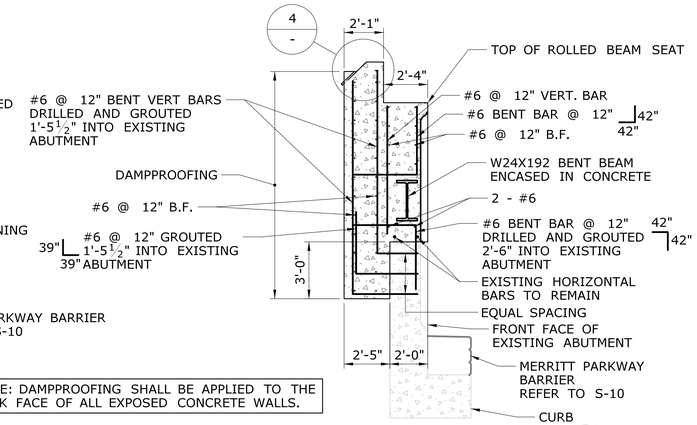

NOTE: DAMPPROOFING SHALL BE APPLIED TO THE BACK FACE OF ALL EXPOSED CONCRETE WALLS.

RECONSTRUCTED ABUTMENT TYPICAL SECTION (1 / -)

SCALE: 1/4" = 1'-0"

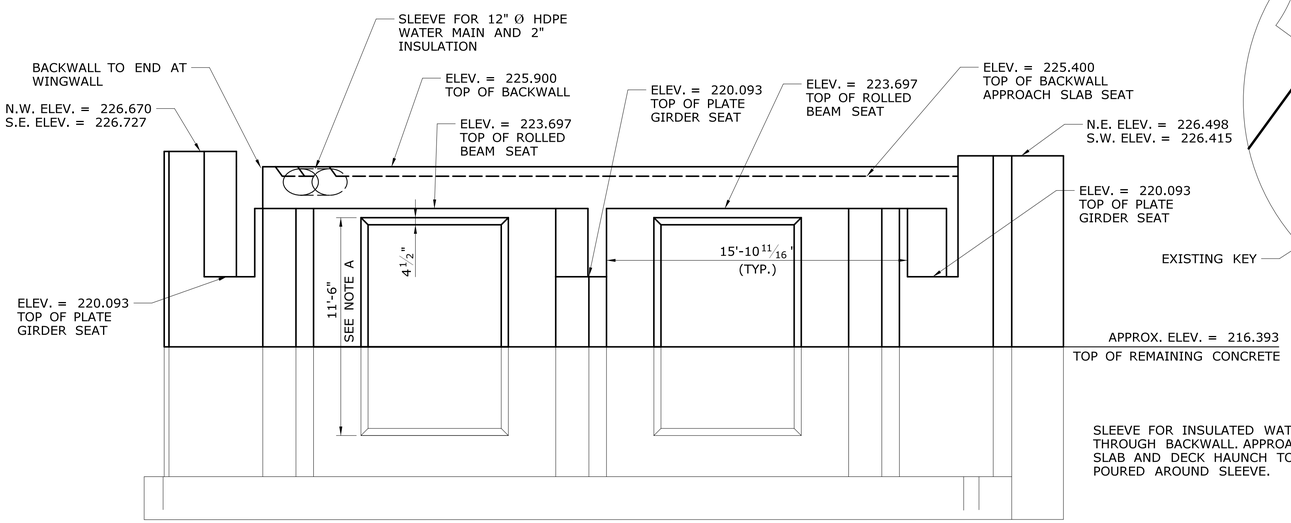

NOTE "A": THE RECESS SHALL BE OF THE SAME DIMENSIONS AS THE EXISTING. THE EDGE OF THE RECESS SHALL BE OF THE SAME STYLE OF THE EXISTING.

NOTE "B": WINGWALLS AND EXISTING KEYS NOT SHOWN.

RECONSTRUCTED ABUTMENT ELEVATION VIEW

SCALE: 1/4" = 1'-0"

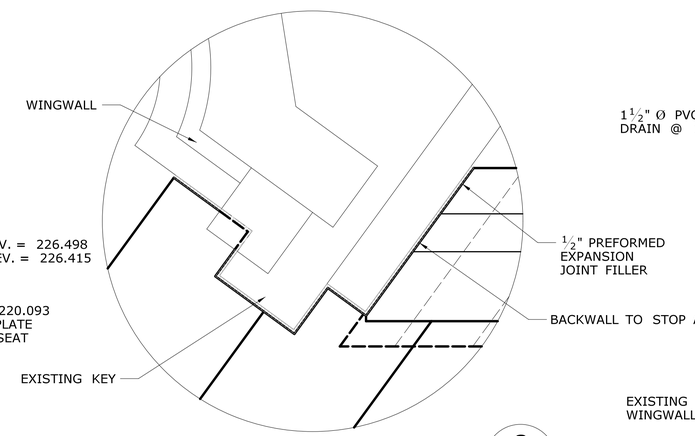

RECONSTRUCTED ABUTMENT KEY DETAIL (3 / -)

SCALE: 1" = 1'-0"

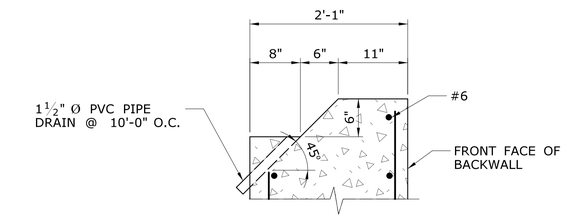

TOP OF BACKWALL SECTION (4 / -)

SCALE: 1" = 1'-0"

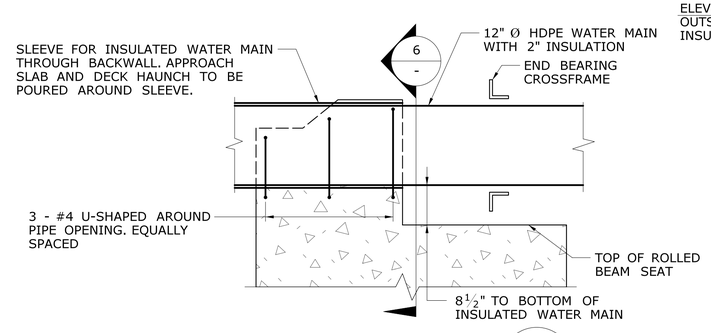

BACKWALL SECTION AT WATER MAIN (5 / -)

SCALE: 3/4" = 1'-0"

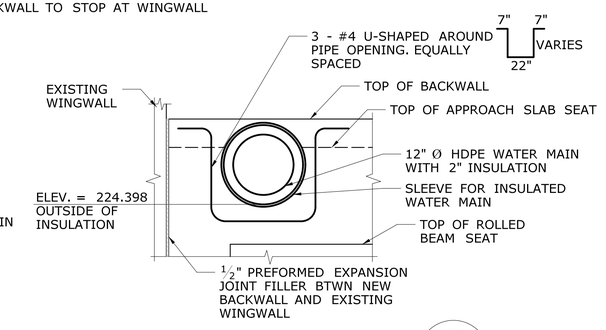

BACKWALL AT WATER MAIN (6 / -)

SCALE: 3/4" = 1'-0"

ABUTMENT RECONSTRUCTION NOTES:

1) ALL EXPOSED CONCRETE SURFACES SHALL BE CLEANED OF ALL DIRT AND DEBRIS IN ACCORDANCE WITH THE SPECIAL PROVISION. ALL EXPOSED SURFACES SHALL BE ROUGHENED BY SANDBLASTING TO APPROXIMATELY 1/4" PRIOR TO POURING OF CONCRETE AGAINST THE SURFACE. ALL SURFACES SHALL BE KEPT DAMP FOR 24 HOURS PRIOR TO POURING. NO STANDING WATER SHALL BE PRESENT WHEN POURING.

2) REINFORCEMENT TO BE DISCONTINUOUS AT OPENING IN BACKWALL FOR WATER MAIN.

REV.	DATE	REVISION DESCRIPTION	SHEET NO.

THE INFORMATION, INCLUDING ESTIMATED QUANTITIES OF WORK, SHOWN ON THESE SHEETS IS BASED ON LIMITED INVESTIGATIONS BY THE STATE AND IS IN NO WAY WARRANTED TO INDICATE THE CONDITIONS OF ACTUAL QUANTITIES OF WORK WHICH WILL BE REQUIRED.

Plotted Date: 7/18/2017

DESIGNER/DRAFTER: JWP
CHECKED BY: SAB
SCALE AS NOTED

STATE OF CONNECTICUT
DEPARTMENT OF TRANSPORTATION

Filename: ...\0102-0356_S-08_Abutment3.dgn

SIGNATURE/BLOCK: OFFICE OF ENGINEERING
APPROVED BY:

PROJECT TITLE: REHABILITATION OF BRIDGE NO. 00722 WEST ROCKS RD. OVER ROUTE 15

TOWN: NORWALK

DRAWING TITLE: ABUTMENT RECONSTRUCTION

PROJECT NO. 0102-0356
DRAWING NO. S-08
SHEET NO. 04.08

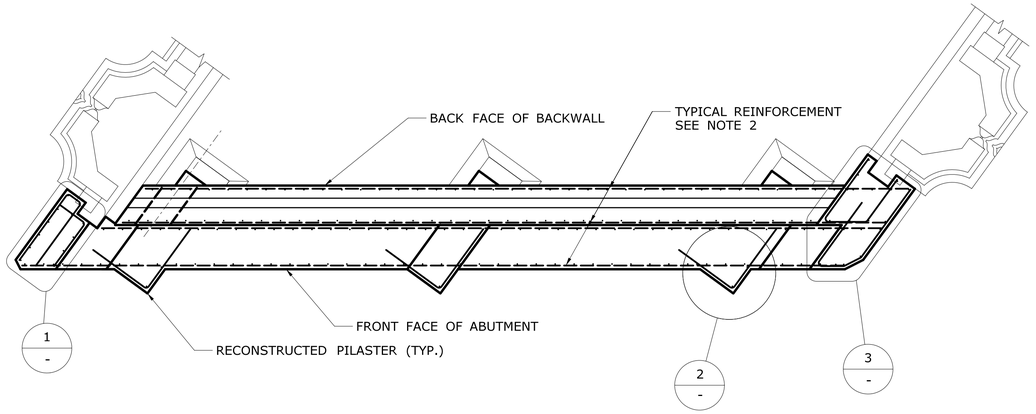

PLAN VIEW - ABUTMENT REINFORCEMENT

SCALE: 1/4" = 1'-0"

ABUTMENT REINFORCEMENT NOTES

1) HORIZONTAL LEGS OF VERTICAL BENT BARS NOT SHOWN FOR CLARITY.

2) DASHED LINES SHOW TYPICAL SECTION REINFORCEMENT. SEE DETAIL-1 ON S-08 FOR BAR SIZE AND SPACING.

3) IF HORIZONTAL CLEARANCE IS NOT SUFFICIENT FOR COVER FOR THE HORIZONTAL LEG OF THE VERTICAL BENT BARS, THE BARS SHALL BE FLARED AS NECESSARY.

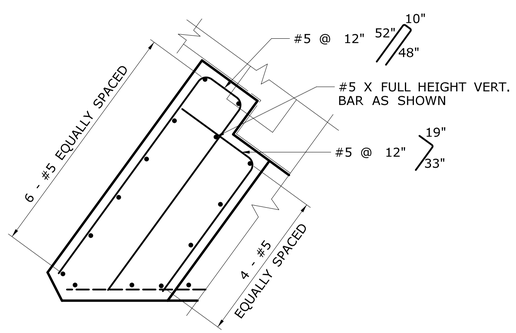

TYPICAL REINFORCEMENT AT ACUTE CORNER

SCALE: 3/4" = 1'-0"

1 / -

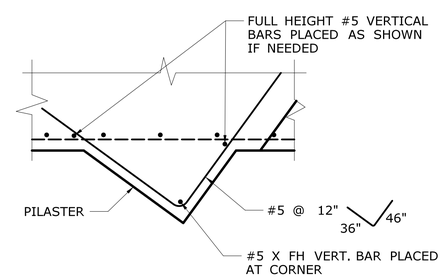

TYPICAL REINFORCEMENT AT PILASTER

SCALE: 3/4" = 1'-0"

2 / -

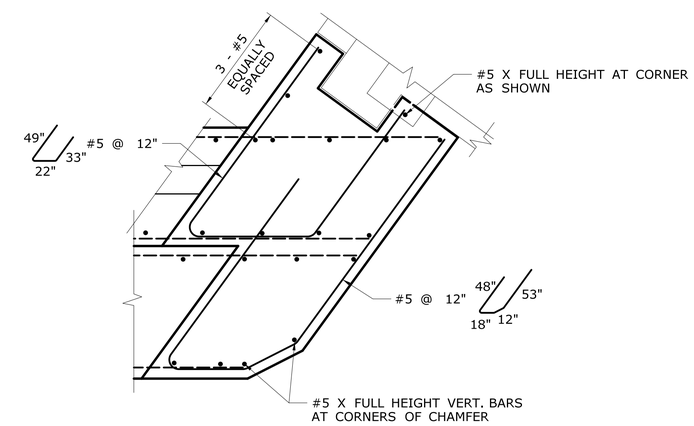

TYPICAL REINFORCEMENT AT OBTUSE CORNER

SCALE: 3/4" = 1'-0"

3 / -

REV.	DATE	REVISION DESCRIPTION	SHEET NO.

THE INFORMATION, INCLUDING ESTIMATED QUANTITIES OF WORK, SHOWN ON THESE SHEETS IS BASED ON LIMITED INVESTIGATIONS BY THE STATE AND IS IN NO WAY WARRANTED TO INDICATE THE CONDITIONS OF ACTUAL QUANTITIES OF WORK WHICH WILL BE REQUIRED.

Plotted Date: 7/18/2017

DESIGNER/DRAFTER: JWP

CHECKED BY: SAB

SCALE AS NOTED

STATE OF CONNECTICUT
DEPARTMENT OF TRANSPORTATION

Filename: ...\0102-0356_S-09_AbutmentReInf.dgn

SIGNATURE/BLOCK:
OFFICE OF ENGINEERING

APPROVED BY:

PROJECT TITLE:
REHABILITATION OF BRIDGE NO. 00722
WEST ROCKS RD. OVER ROUTE 15

TOWN: NORWALK

DRAWING TITLE: ABUTMENT REINFORCEMENT

PROJECT NO. 0102-0356

DRAWING NO. S-09

SHEET NO. 04.09

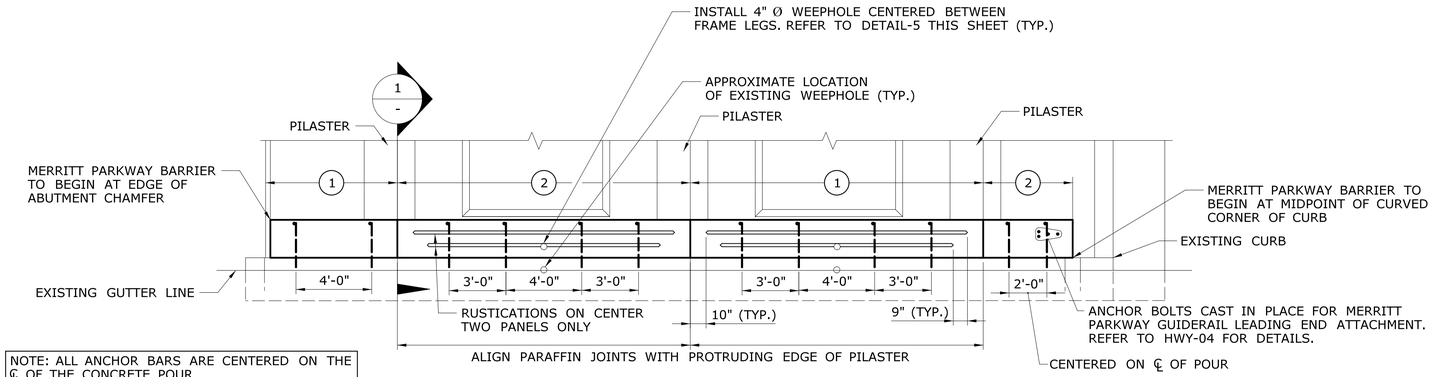

NOTE: ALL ANCHOR BARS ARE CENTERED ON THE ℄ OF THE CONCRETE POUR.

MERRITT PARKWAY BARRIER SHALL BE NORMAL TO THE FACE OF THE ABUTMENT.

ELEVATION - MERRITT PARKWAY BARRIER CONCRETE POUR SEQUENCE ALONG FACE OF ABUTMENTS

SCALE: 1/4" = 1'-0"

POUR SEQUENCE KEY

(1) - DENOTES FIRST CONCRETE POUR

(2) - DENOTES SECOND CONCRETE POUR

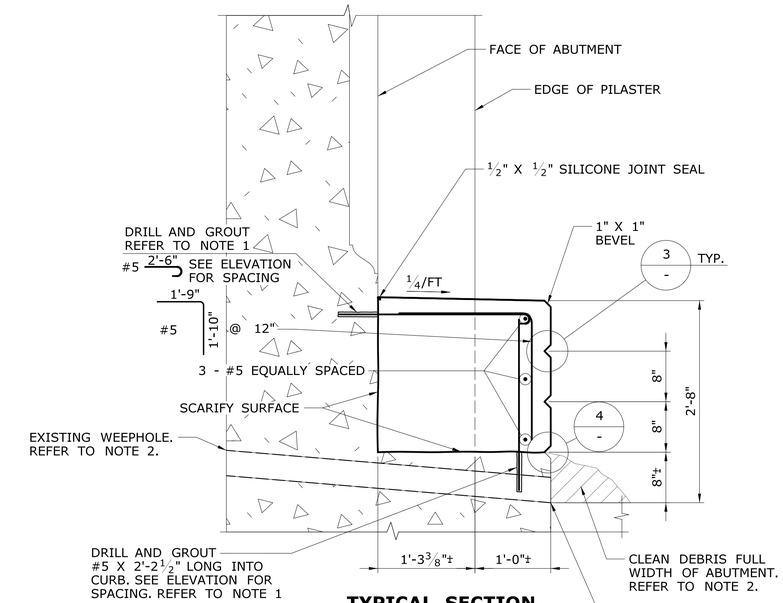

TYPICAL SECTION

SCALE: 1" = 1'-0"

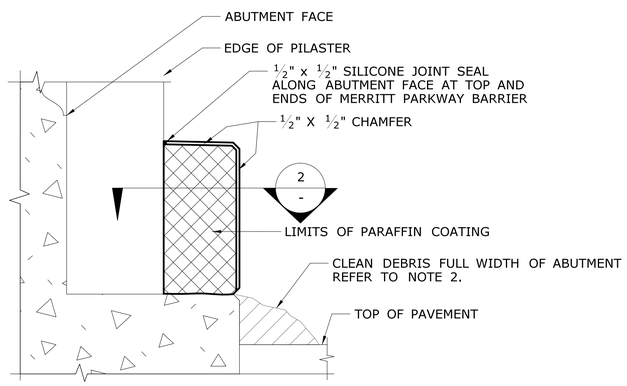

PARAFFIN COATED JOINT (1 -)

SCALE: 1" = 1'-0"

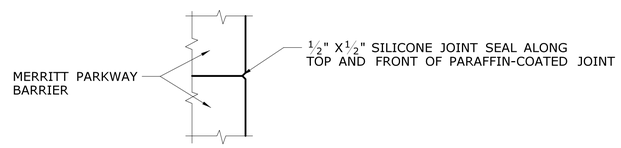

SECTION AT PARAFFIN COATED JOINT (2 -)

SCALE: 1 1/2" = 1'-0"

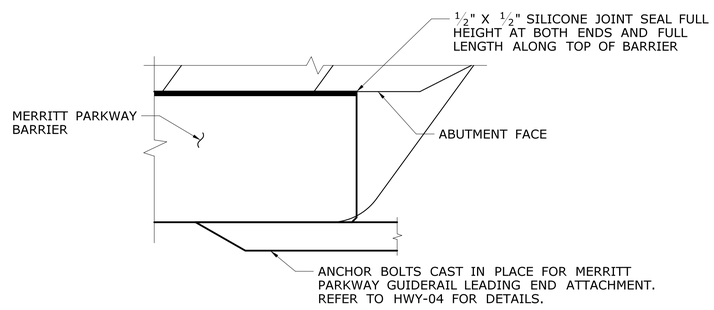

PLAN - END OF MERRITT PARKWAY BARRIER

SCALE: 3/4" = 1'-0"

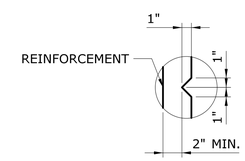

DETAIL (3 -)

SCALE: 1 1/2" = 1'-0"

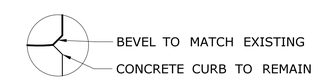

DETAIL (4 -)

SCALE: 1 1/2" = 1'-0"

MERRITT PARKWAY BARRIER NOTES

1) THE DEPTH AND DIAMETER OF THE HOLE SHALL BE A MINIMUM OF 6" AND DETERMINED BY THE MANUFACTURER OF THE CHEMICAL ANCHOR TO DEVELOP THE STRENGTH OF THE BAR. THE COST OF DRILLING AND GROUTING SHALL BE INCLUDED UNDER THE ITEM "DRILLING HOLES AND GROUTING DOWELS"

2) ALL DEBRIS IN FRONT OF AND ON TOP OF THE EXISTING CURB SHALL BE REMOVED. THE CURB SHALL BE THOROUGHLY CLEANED OF ALL DIRT AND DEBRIS PRIOR TO POURING OF MERRITT PARKWAY BARRIER. IT IS RECOMMENDED THAT THE BULK OF DEBRIS BE REMOVED DURING STAGE 1 PRIOR TO THE ROAD CLOSURE AND THE EXISTING WEEPHOLES LOCATED. REMOVING DEBRIS AND CLEANING CURB SHALL BE PAID FOR UNDER THE ITEM "MERRITT PARKWAY BARRIER".

3) SHOULD THE CONTRACTOR BE UNABLE TO LOCATE EXISTING WEEPHOLES OR THE EXISTING WEEPHOLES ARE OBSTRUCTED, NOTIFY THE ENGINEER IMMEDIATELY.

4) CARE SHALL BE TAKEN NOT TO DAMAGE EXISTING WEEPHOLES. ANCHOR BARS SHALL BE MOVED AS NECESSARY SHOULD THEY INTERFERE WITH EXISTING WEEPHOLES.

5) SCARIFYING TO BE INCLUDED FOR PAYMENT UNDER THE ITEM "MERRITT PARKWAY BARRIER"

REV.	DATE	REVISION DESCRIPTION	SHEET NO.

THE INFORMATION, INCLUDING ESTIMATED QUANTITIES OF WORK, SHOWN ON THESE SHEETS IS BASED ON LIMITED INVESTIGATIONS BY THE STATE AND IS IN NO WAY WARRANTED TO INDICATE THE CONDITIONS OF ACTUAL QUANTITIES OF WORK WHICH WILL BE REQUIRED.

Plotted Date: 7/18/2017

DESIGNER/DRAFTER: JWP

CHECKED BY: SAB

SCALE AS NOTED

STATE OF CONNECTICUT
DEPARTMENT OF TRANSPORTATION

Filename: ...\0102-0356_S-10_MerrittParkwayBarrier.dgn

SIGNATURE/BLOCK: OFFICE OF ENGINEERING

APPROVED BY: Mary E. Beck

PROJECT TITLE: REHABILITATION OF BRIDGE NO. 00722 WEST ROCKS RD. OVER ROUTE 15

TOWN: NORWALK

DRAWING TITLE: MERRITT PARKWAY BARRIER

PROJECT NO. 0102-0356

DRAWING NO. S-10

SHEET NO. 04.10

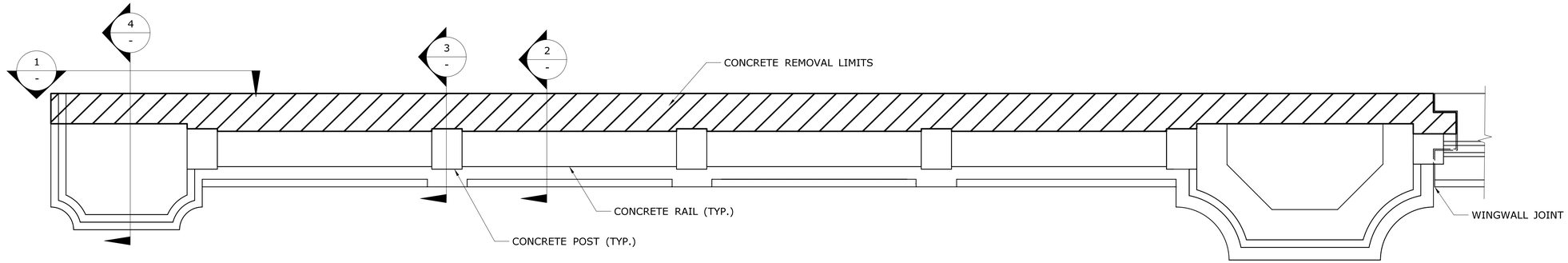

PLAN
TYPICAL WINGWALL MODIFICATION
SCALE: 1/2" = 1'-0"

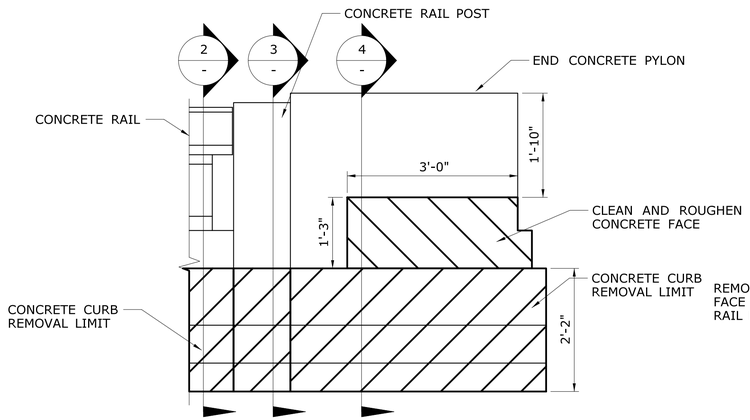

END PYLON ELEVATION 1 -
SCALE: 3/4" = 1'-0"

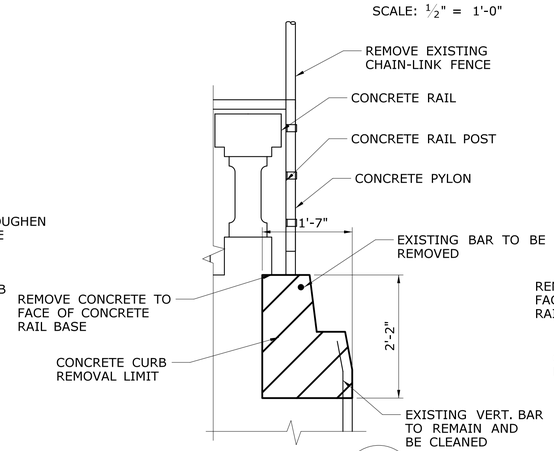

SECTION AT CURB 2 -
SCALE: 3/4" = 1'-0"

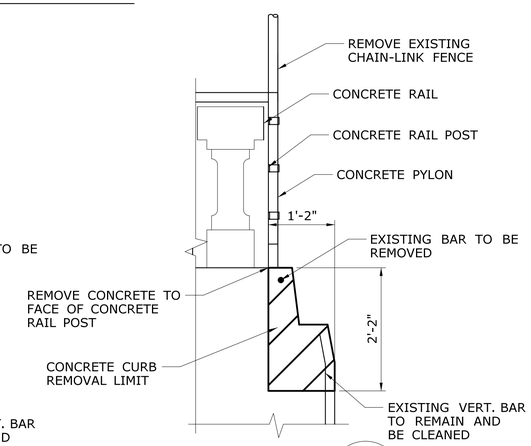

SECTION AT POST 3 -
SCALE: 3/4" = 1'-0"

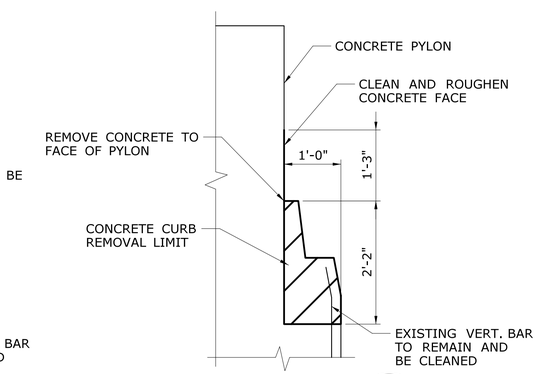

SECTION AT PYLON 4 -
SCALE: 3/4" = 1'-0"

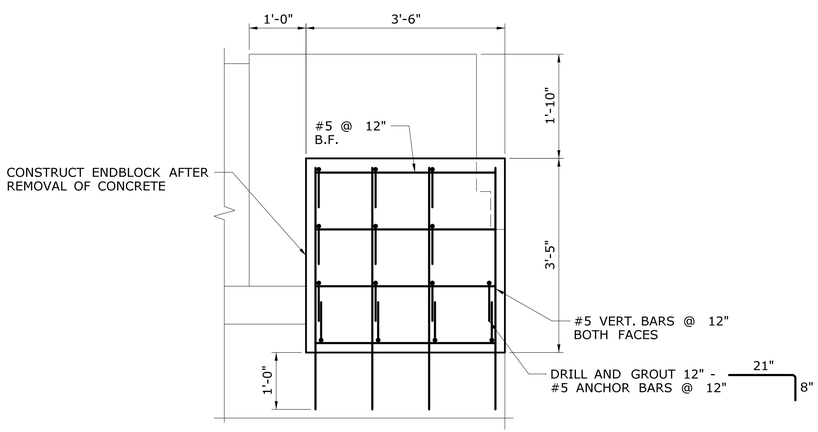

ENDBLOCK ELEVATION
SCALE: 3/4" = 1'-0"

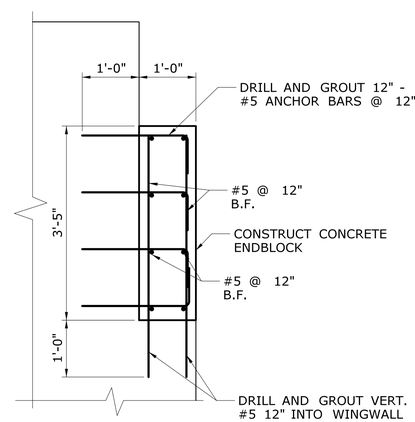

CONCRETE ENDBLOCK SECTION
SCALE 3/4" = 1'-0"

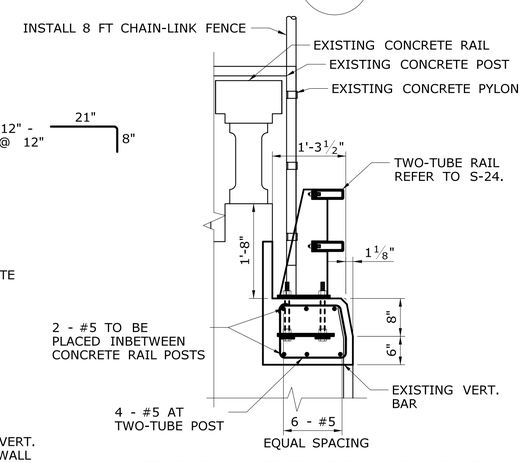

NOTE: CHAIN LINK FENCE NOT SHOWN FOR CLARITY

WINGWALL RECONSTRUCTED CURB SECTION
SCALE: 3/4" = 1'-0"

REV.	DATE	REVISION DESCRIPTION	SHEET NO.

THE INFORMATION, INCLUDING ESTIMATED QUANTITIES OF WORK, SHOWN ON THESE SHEETS IS BASED ON LIMITED INVESTIGATIONS BY THE STATE AND IS IN NO WAY WARRANTED TO INDICATE THE CONDITIONS OF ACTUAL QUANTITIES OF WORK WHICH WILL BE REQUIRED.

Plotted Date: 7/18/2017

DESIGNER/DRAFTER: JWP
CHECKED BY: SAB
SCALE AS NOTED

STATE OF CONNECTICUT
DEPARTMENT OF TRANSPORTATION

Filename: ...\0102-0356_S-11_End Block.dgn

SIGNATURE/BLOCK:
OFFICE OF ENGINEERING
APPROVED BY:

PROJECT TITLE:
REHABILITATION OF BRIDGE NO. 00722
WEST ROCKS RD. OVER ROUTE 15

TOWN: NORWALK

DRAWING TITLE:
ENDBLOCK AND WINGWALL MODIFICATION

PROJECT NO. 0102-0356
DRAWING NO. S-11
SHEET NO. 04.11

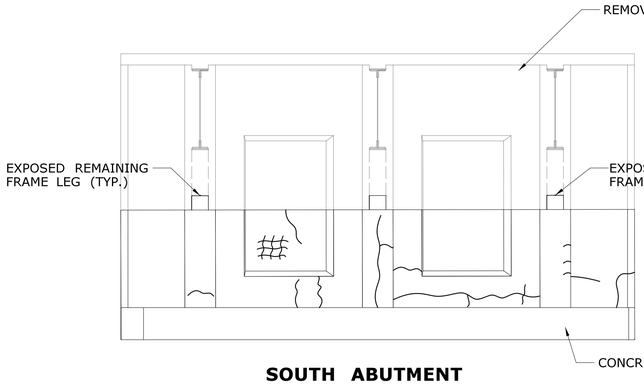

SOUTH ABUTMENT
REMAINING CONCRETE DETERIORATION
SCALE: $^{3}/_{16}$" = 1'-0"

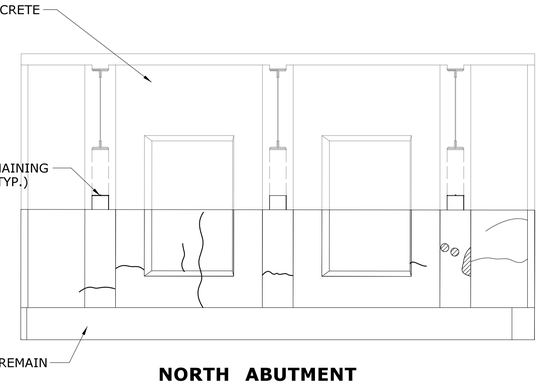

NORTH ABUTMENT
REMAINING CONCRETE DETERIORATION
SCALE: $^{3}/_{16}$" = 1'-0"

DETERIORATION NOTES:

1) ALL DETERIORATION SHOWN IS APPROXIMATED FROM THE NOVEMBER 2015 BRIDGE SAFETY AND EVALUATION REPORT. ALL DETERIORATION SHALL BE FIELD VERIFIED.

2) ALL DETERIORATED CONCRETE SHALL BE REPAIRED USING "CLASS "S" CONCRETE FOR HISTORIC BRIDGES" OR "VARIABLE DEPTH PATCH FOR HISTORIC CONCRETE BRIDGES". FOR CONCRETE PATCHING DETAILS REFER TO S-13.

3) THE COLOR OF ALL CONCRETE PATCHES SHALL MATCH THE COLOR OF THE EXISTING CONCRETE. COLOR MATCHING SHALL BE IN ACCORDANCE WITH THE SPECIAL PROVISIONS.

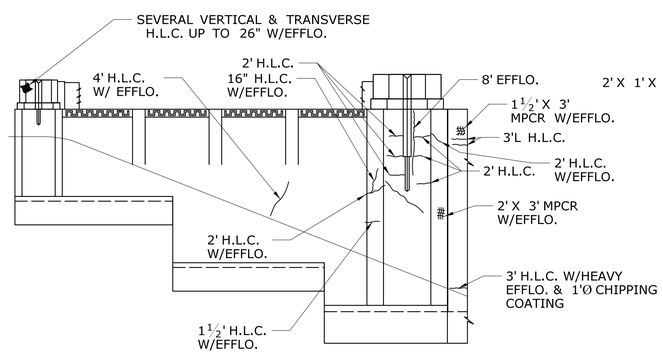

S.E. WINGWALL
SCALE: $^{1}/_{8}$" = 1'-0"

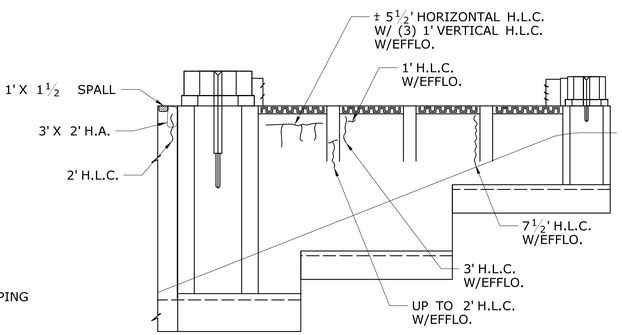

S.W. WINGWALL
SCALE: $^{1}/_{8}$" = 1'-0"

DETERIORATION LEGEND

- : APPROXIMATE LOCATION OF HOLLOW AREA (PER NOV. 2015 BRIDGE INSPECTION REPORT)
- : APPROXIMATE LOCATION OF MAP CRACKING (PER NOV. 2015 BRIDGE INSPECTION REPORT)
- : HAIRLINE CRACK
- : SCALE AREA (HEAVY, MID OR LIGHT)
- : APPROXIMATE LOCATION OF SPALL AREA (PER NOV. 2015 BRIDGE INSPECTION REPORT)

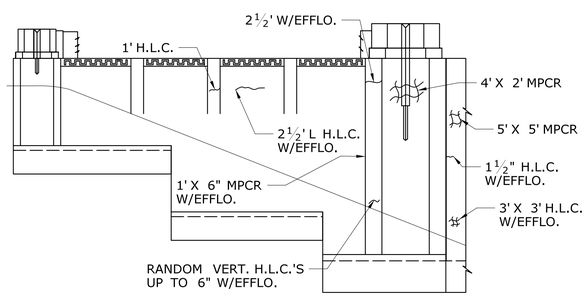

N.W. WINGWALL
SCALE: $^{1}/_{8}$" = 1'-0"

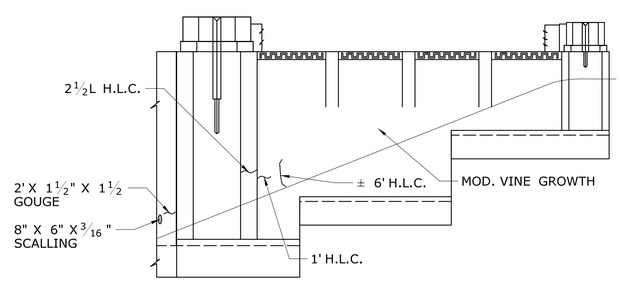

N.E. WINGWALL
SCALE: $^{1}/_{8}$" = 1'-0"

REV.	DATE	REVISION DESCRIPTION	SHEET NO.

THE INFORMATION, INCLUDING ESTIMATED QUANTITIES OF WORK, SHOWN ON THESE SHEETS IS BASED ON LIMITED INVESTIGATIONS BY THE STATE AND IS IN NO WAY WARRANTED TO INDICATE THE CONDITIONS OF ACTUAL QUANTITIES OF WORK WHICH WILL BE REQUIRED.

Plotted Date: 7/18/2017

DESIGNER/DRAFTER: JWP
CHECKED BY: SAB
SCALE AS NOTED

STATE OF CONNECTICUT
DEPARTMENT OF TRANSPORTATION

Filename: ...\0102-0356_S-12_WWPatching.dgn

SIGNATURE/BLOCK:
OFFICE OF ENGINEERING
APPROVED BY:

PROJECT TITLE:
REHABILITATION OF BRIDGE NO. 00722
WEST ROCKS RD. OVER ROUTE 15

TOWN: NORWALK

DRAWING TITLE:
APPROXIMATE SUBSTRUCTURE DETERIORATION

PROJECT NO. 0102-0356
DRAWING NO. S-12
SHEET NO. 04.12

CONCRETE REPAIR NOTES

THE ENGINEER SHALL PERFORM AN INSPECTION OF THE WINGWALLS AND ABUTMENTS TO DETERMINE THE LOCATION AND EXACT LIMITS OF ALL AREAS TO BE REPAIRED. THE CONTRACTOR SHALL SUPPLY WHATEVER MEANS NECESSARY, INCLUDING BUT NOT LIMITED TO LADDERS, LIFTS, AND TRAFFIC PROTECTION FOR THE ENGINEER TO SAFELY ACCESS THE AREAS FOR INSPECTION. THE COST OF PROVIDING ACCESS FOR THE INSPECTION SHALL BE CONSIDERED INCLUDED IN THE GENERAL COST OF THE PROJECT. THE ENGINEER SHALL THEN DETERMINE THE TYPE OF REPAIR REQUIRED FOR EACH AREA BASED ON THE GUIDELINES DESCRIBED IN THE CONCRETE PATCHING NOTES ON THIS DRAWING.

REFER TO DRAWINGS S-06 AND S-12 FOR SUBSTRUCTURE AREAS NOTED AS DEFICIENT IN THE BRIDGE SAFETY INSPECTION REPORT DATED NOVEMBER, 2015. NOTED LOCATIONS ARE APPROXIMATE ONLY. THIS IN NO WAY CONSTITUTES THE FULL LIMITS OF REPAIRS BUT IS A GUIDELINE OF DEFICIENT AREAS AS OF THE DATE OF THE NOTED INSPECTION. THE BRIDGE SHALL BE SOUNDED AT THE TIME OF PROJECT CONSTRUCTION AND THE REMOVAL LIMITS AND CORRESPONDING QUANTITIES MAY INCREASE FROM THOSE SHOWN WITHIN THE PLANS AS A RESULT OF THAT EVALUATION.

1. THE REMOVAL OF DETERIORATED CONCRETE SHALL PROCEED AS DIRECTED BY THE ENGINEER. IF THE REMOVAL OF DETERIORATED CONCRETE BECOMES EXCESSIVE, THE REMOVAL WORK SHALL BE STOPPED AT THAT LOCATION AND THE ENGINEER SHALL BE NOTIFIED IMMEDIATELY.
2. REPAIR DEPTH SHALL BE $\frac{1}{2}$" OR GREATER. REPAIR DEPTHS LESS THAN $\frac{1}{2}$" NEED NOT BE REPAIRED.
3. REINFORCING WHICH IS DETERMINED BY THE ENGINEER TO BE IN NEED OF REPLACEMENT, SHALL BE REMOVED TO A POINT WHERE IT IS SOUND. THE PATCH SHALL EXTEND A SUFFICIENT DISTANCE BEYOND THIS POINT TO DEVELOP A SPLICE LENGTH SPECIFIED IN THE TABLE ON THIS SHEET. REINFORCING BARS SHALL BE PAID FOR UNDER THE ITEM "DEFORMED STEEL BARS".
4. ON WINGWALLS AND ABUTMENTS, IF REMOVAL OF DETERIORATED CONCRETE EXTENDS INSIDE THE MAIN REINFORCEMENT, REMOVAL SHALL BE LIMITED TO ONE FACE OF THE MEMBER AT A TIME AND A MAXIMUM AREA OF 3 FT HORIZONTAL AND 3 FT VERTICAL. IF REMOVAL EXTENDS MORE THAN 1.5" INSIDE THE MAIN REINFORCEMENT, THE WORK SHALL BE STOPPED AND THE ENGINEER NOTIFIED IMMEDIATELY.
5. IF AFTER CONCRETE REMOVAL, THE REINFORCING STEEL HAS AT LEAST ONE HALF OF ITS SURFACE AREA EXPOSED, THE CONCRETE SHALL BE FURTHER REMOVED TO A DEPTH OF $\frac{3}{4}$" AROUND THE STEEL. IF REINFORCEMENT LAP SPLICES ARE ENCOUNTERED IN PIER CAPS OR COLUMNS, THE ENGINEER SHALL BE INFORMED IMMEDIATELY. IF THE EXISTING REINFORCING IS SEVERELY CORRODED OR DAMAGED, THE ENGINEER SHALL BE NOTIFIED IMMEDIATELY.
6. VERTICAL DETERIORATED AREAS LESS THAN 2 SQUARE FEET WITH LESS THAN ONE HALF OF THE REINFORCEMENT CIRCUMFERENCE EXPOSED OR LESS THAN 1 SQUARE FOOT WITH GREATER THAN ONE HALF OF THE REINFORCEMENT CIRCUMFERENCE EXPOSED SHALL BE REPAIRED WITH "VARIABLE DEPTH PATCH FOR HISTORIC CONCRETE BRIDGES". DETERIORATED AREAS NOT MEETING THESE CRITERIA SHALL BE REPAIRED WITH "CLASS 'S' CONCRETE FOR HISTORIC BRIDGES"
7. HOOK-TYPE EXPANSION ANCHOR BOLTS SHALL BE MECHANICALLY GALVANIZED IN ACCORDANCE WITH ASTM B695, CLASS 50, TYPE 1. COST OF WELDED WIRE FABRIC AND HOOK-TYPE BOLTS, INCLUDING MATERIAL AND INSTALLATION, SHALL BE INCLUDED WITH THE COST OF PATCHING MATERIAL.
8. AT THE OPTION OF THE ENGINEER, THE PATCHING MATERIALS MAY BE SPECIFIED TO REPAIR DETERIORATED AREAS NOT MEETING THE ABOVE REQUIREMENTS.
9. ALL CONCRETE PATCH PERIMETERS SHALL BE SQUARED-OFF AND SHALL NOT BE DIAGONAL, CIRCULAR OR IRREGULARLY SHAPED.
10. ANODES ARE TO BE INSTALLED IN "CLASS 'S' CONCRETE FOR HISTORIC BRIDGES" CONCRETE REPAIRS. INSTALLATION OF ANODES SHALL BE AS DETAILED ON THIS PLAN AND PER THE RECOMMENDATIONS OF THE ANODE MANUFACTURER'S REPRESENTATIVE AND AS DIRECTED BY THE ENGINEER.
11. ANODES SHALL HAVE A CLEAR COVER OF 2". PROVIDE CONCRETE BUILDOUT IF NECESSARY TO OBTAIN MINIMUM 2" COVER.
12. ANODES SHALL BE PAID FOR UNDER THE ITEM "EMBEDDED GALVANIC ANODES".
13. ANODES SHALL BE INSTALLED AT THE INTERFACE OF THE PROPOSED ABUTMENT MODIFICATIONS AND THE EXISTING ABUTMENT TO REMAIN.

TABLE OF SPLICE LENGTHS

	BAR SIZE	MIN. SPLICE LENGTH
REINFORCEMENT SPACING @ ≥ 6" O.C. **	#4	1'-4"
	#5	1'-4"
	#6	1'-9"
	#7	2'-4"
	#8	3'-0"

** FOR BARS SPACED "LESS THAN" 6" O.C. MULTIPLY TABLE VALUES BY 1.25

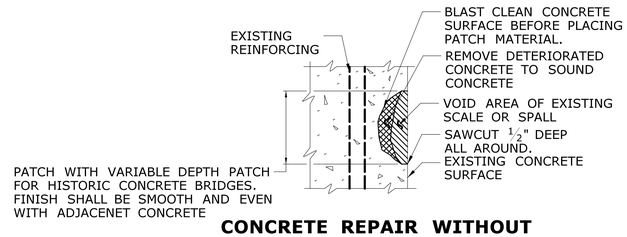

CONCRETE REPAIR WITHOUT EXPOSED REINFORCING

N.T.S.

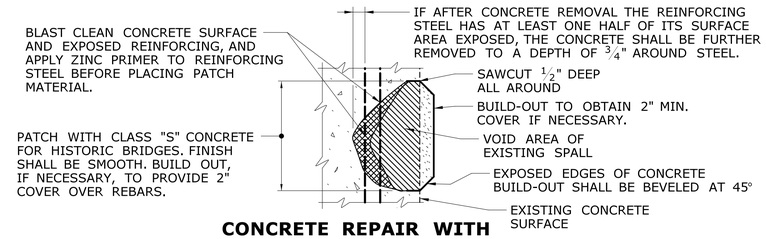

CONCRETE REPAIR WITH EXPOSED REINFORCING

N.T.S.

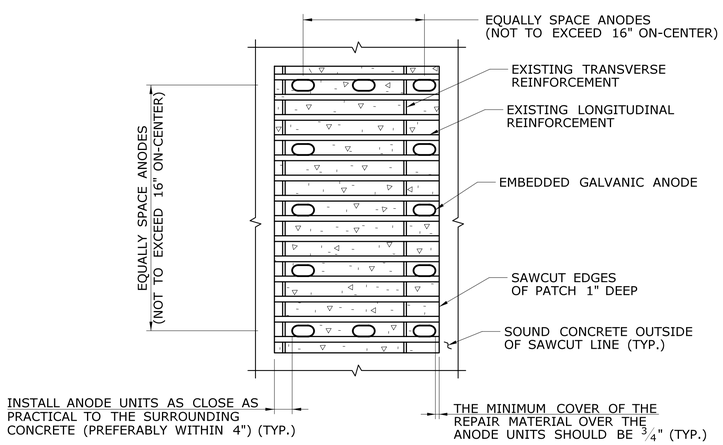

ANODE PLACEMENT - LARGE RECTANGULAR-TYPE PATCH

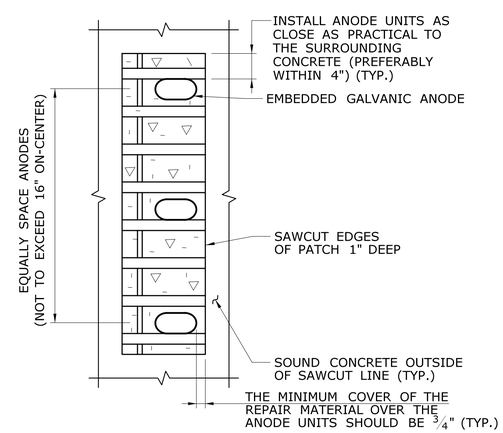

ANODE PLACEMENT - NARROW-TYPE PATCH

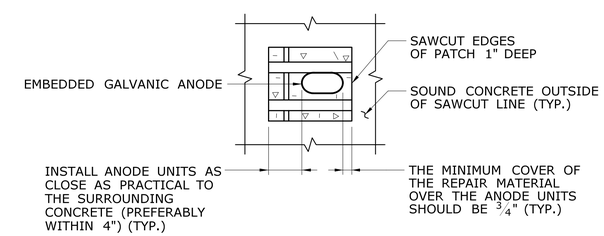

ANODE PLACEMENT - SMALL PATCH

INSTALLATION OF EMBEDDED GALVANIC ANODES

NOT TO SCALE

REV.	DATE	REVISION DESCRIPTION	SHEET NO.

THE INFORMATION, INCLUDING ESTIMATED QUANTITIES OF WORK, SHOWN ON THESE SHEETS IS BASED ON LIMITED INVESTIGATIONS BY THE STATE AND IS IN NO WAY WARRANTED TO INDICATE THE CONDITIONS OF ACTUAL QUANTITIES OF WORK WHICH WILL BE REQUIRED.

Plotted Date: 7/18/2017

DESIGNER/DRAFTER: JWP
CHECKED BY: SAB
SCALE AS NOTED

STATE OF CONNECTICUT
DEPARTMENT OF TRANSPORTATION

Filename: ...\0102-0356_S-13_ConcPatchDet.dgn

SIGNATURE/BLOCK: OFFICE OF ENGINEERING
APPROVED BY:

PROJECT TITLE: REHABILITATION OF BRIDGE NO. 00722 WEST ROCKS RD. OVER ROUTE 15

TOWN: NORWALK

DRAWING TITLE: CONCRETE PATCHING DETAILS

PROJECT NO. 0102-0356
DRAWING NO. S-13
SHEET NO. 04.13

ELASTOMERIC BEARING NOTES

1. THE ELASTOMERIC BEARINGS ARE DESIGNED USING METHOD B OF THE AASHTO LRFD BRIDGE DESIGN SPECIFICATIONS.
2. THE STEEL FOR THE EXTERNAL LOAD PLATES SHALL CONFORM TO THE REQUIREMENTS OF AASHTO M270, GRADE 50 OR OTHER STEEL WITH YIELD STRENGTH EQUAL TO 50,000 PSI.
3. THE NEW STEEL CONNECTION PLATES, TABS, AND LOAD PLATES SHALL BE SHOP PAINTED USING A ZINC PRIMER PRIOR TO INSTALLATION.
4. WELDING ADJACENT TO THE ELASTOMERIC BEARING SHALL NOT BE PERMITTED. THE CONNECTION PLATE AND/OR TABS SHALL BE CLAMPED IN PLACE BEFORE AND DURING WELDING.
5. THE ELASTOMER SHALL BE VIRGIN NEOPRENE (POLYCHLOROPRENE). THE ELASTOMER COMPOUND SHALL BE LOW TEMPERATURE GRADE 3, HAVE A SHORE 'A' DUROMETER HARDNESS OF 50 ± 5 POINTS AND MEET THE REQUIREMENTS OF AASHTO, DIVISION II-CONSTRUCTION (SECTION 18).
6. THE EXPOSED SURFACES OF THE ELASTOMER SHALL NOT BE PAINTED.
7. THE STEEL LAMINAE SHALL CONFORM TO ASTM A570, GRADE 36 OR 40, ASTM A611 GRADE C OR D OR APPROVED EQUAL. ALL LAMINAE SHALL HAVE A 1/4" (MIN.) SIDE COVER.
8. THE MAXIMUM DESIGN LOAD (DL + LL WITHOUT IMPACT) FOR EACH BEARING ARE NOTED ON THE BEARING DETAILS. THIS INFORMATION IS PROVIDED FOR THE PROOF LOAD TEST DESCRIBED IN THE SPECIAL PROVISION "ELASTOMERIC BEARING PADS"
9. THE ELASTOMERIC BEARING SHALL BE INSTALLED WHEN THE AMBIENT AIR AND BEARING TEMPERATURES IS BETWEEN 40° F TO 80° F AND HAS BEEN WITHIN THIS RANGE FOR AT LEAST TWO HOURS.
10. STEEL PLATES SHALL BE PAINTED AFTERWARDS AS PART OF THE SUPERSTRUCTURE PAINTING. THE PADS SHALL NOT BE PAINTED.
11. THE COST OF FURNISHING AND INSTALLING THE ELASTOMERIC BEARINGS SHALL BE PAID FOR UNDER ITEM "ELASTOMERIC BEARING PADS".
12. THE COST OF FURNISHING AND INSTALLING SOLE PLATES, TEMPLATE PLATES, SHEAR PLATE, AND ANCHOR BOLTS SHALL BE PAID FOR UNDER ITEM "STRUCTURAL STEEL (SITE NO. 1)".
13. THE COMPRESSION IN THE ELASTOMERIC BEARINGS SHALL BE NO GREATER THAN 1/8".
14. ANCHOR BOLTS SHALL CONFORM TO ASTM F1554, GRADE 36, CLASS 2A THREADED RODS. ALL NUTS SHALL CONFORM TO ASTM A563. WASHERS SHALL CONFORM TO ASTM F436.
15. ANCHOR BOLTS, NUTS, AND WASHERS SHALL BE GALVANIZED IN ACCORDANCE WITH ASTM A153.
16. THE SOLE PLATE TEMPERATURE SHALL NOT EXCEED 200° F DURING FIELD WELDING OPERATIONS.

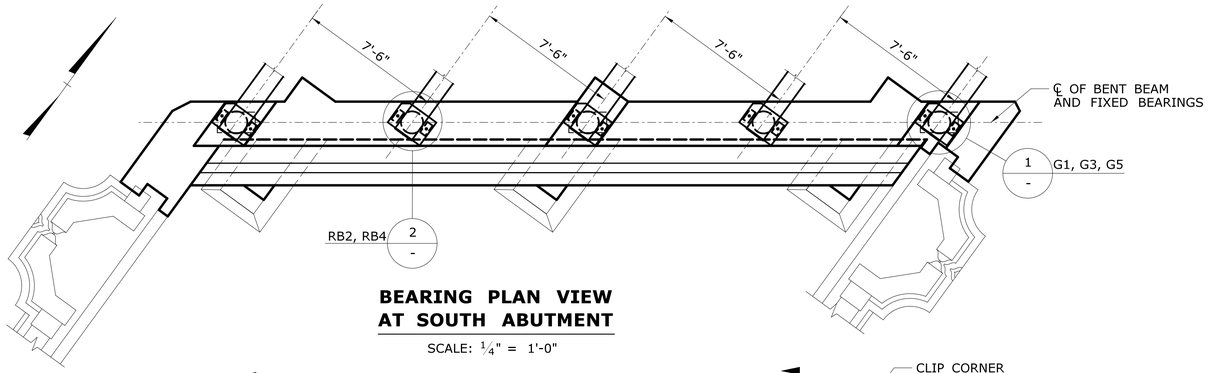

BEARING PLAN VIEW AT SOUTH ABUTMENT
SCALE: 1/4" = 1'-0"

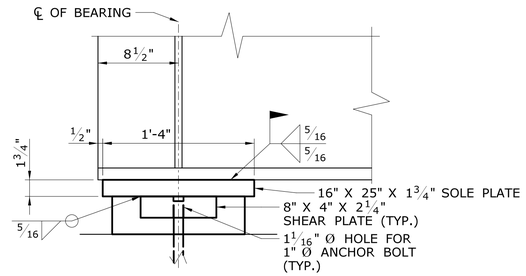

ELEVATION - FIXED BEARING
SCALE: 1 1/2" = 1'-0"

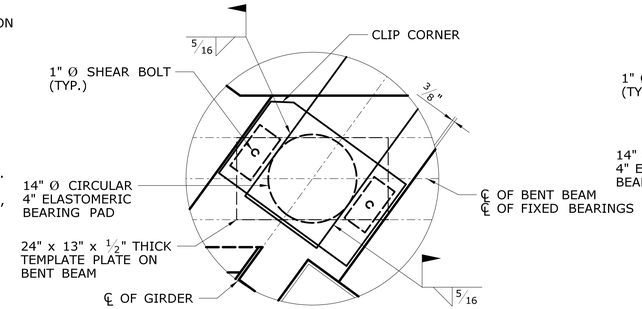

ARCH GIRDER FIXED BEARING PLAN 1 -
SCALE: 1" = 1'-0"

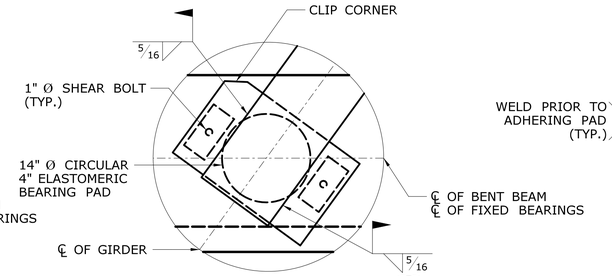

ROLLED BEAM FIXED BEARING PLAN 2 -
SCALE: 1" = 1'-0"

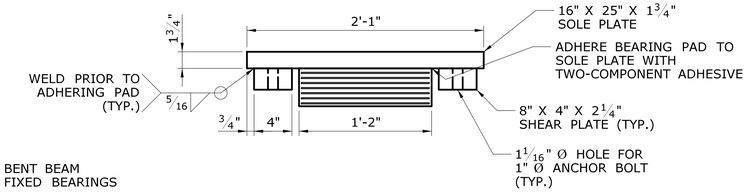

SECTION - FIXED BEARING
SCALE: 1 1/2" = 1'-0"

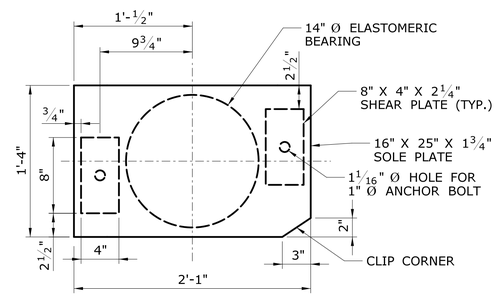

PLAN - FIXED BEARING
SCALE: 1 1/2" = 1'-0"

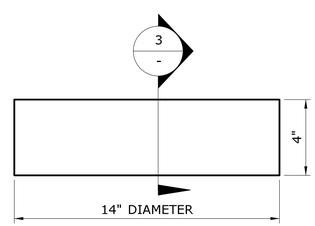

VIEW OF ELASTOMERIC BEARING
SCALE: 3" = 1'-0"

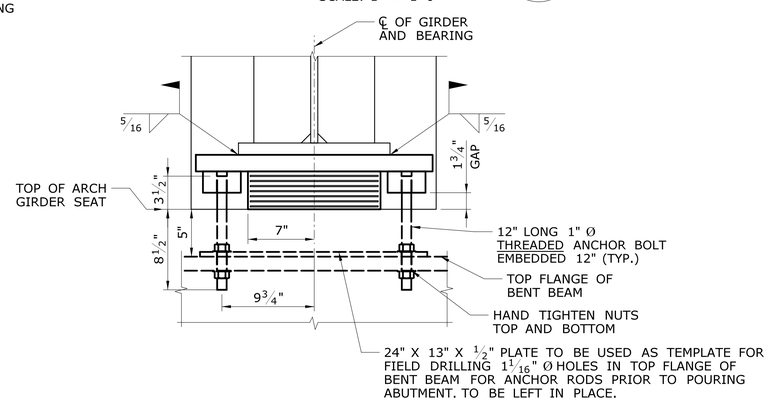

SECTION - FIXED BEARING ARCH PLATE GIRDER
SCALE: 1 1/2" = 1'-0"

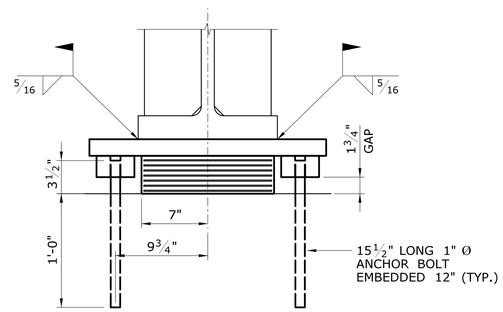

SECTION - FIXED BEARING ROLLED BEAM
SCALE: 1 1/2" = 1'-0"

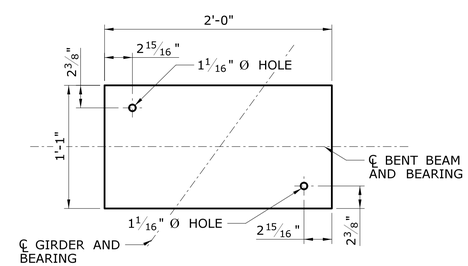

PLAN - FIXED BEARING ARCH PLATE GIRDER TEMPLATE PLATE
SCALE: 1 1/2" = 1'-0"

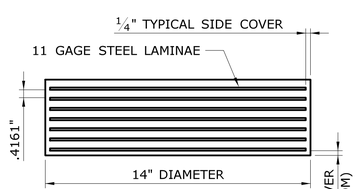

SECTION 3 -
SCALE: 3" = 1'-0"

ELASTOMERIC BEARING NOTES

THE STEEL-LAMINATED ELASTOMERIC BEARING SHALL BE FABRICATED AS FOLLOWS:

1 - 0.2500" COVER LAYER OF ELASTOMER	=	0.2500"
7 - 0.4161" INTERNAL ELASTOMER LAYERS	=	2.9128"
7 - 0.1196" 11 GAGE STEEL LAMINAE	=	0.8372"
TOTAL BEARING PAD THICKNESS	=	4.0000"

BEARING DESIGN LOADS

DEAD LOAD	=	90 KIPS
LIVE LOAD	=	91 KIPS
TOTAL LOAD	=	181 KIPS

REV.	DATE	REVISION DESCRIPTION	SHEET NO.

THE INFORMATION, INCLUDING ESTIMATED QUANTITIES OF WORK, SHOWN ON THESE SHEETS IS BASED ON LIMITED INVESTIGATIONS BY THE STATE AND IS IN NO WAY WARRANTED TO INDICATE THE CONDITIONS OF ACTUAL QUANTITIES OF WORK WHICH WILL BE REQUIRED.

Plotted Date: 7/18/2017

DESIGNER/DRAFTER: JWP
CHECKED BY: SAB
SCALE AS NOTED

STATE OF CONNECTICUT
DEPARTMENT OF TRANSPORTATION

Filename: ...\0102-0356_S-14_FixedBearingDets.dgn

SIGNATURE/BLOCK: OFFICE OF ENGINEERING
APPROVED BY:

PROJECT TITLE: REHABILITATION OF BRIDGE NO. 00722 WEST ROCKS RD. OVER ROUTE 15

TOWN: NORWALK

DRAWING TITLE: FIXED BEARING DETAILS

PROJECT NO. 0102-0356
DRAWING NO. S-14
SHEET NO. 04.14

ELASTOMERIC BEARING NOTES

THE STEEL-LAMINATED ELASTOMERIC BEARING SHALL BE FABRICATED AS FOLLOWS:

1 - 0.2500" COVER LAYER OF ELASTOMER	=	0.2500"
7 - 0.4161" INTERNAL ELASTOMER LAYERS	=	2.9128"
7 - 0.1196" 11 GAGE STEEL LAMINAE	=	0.9568"
TOTAL BEARING PAD THICKNESS	=	4.0000"

BEARING DESIGN LOADS

DEAD LOAD	=	90 KIPS
LIVE LOAD	=	91 KIPS
TOTAL LOAD	=	181 KIPS

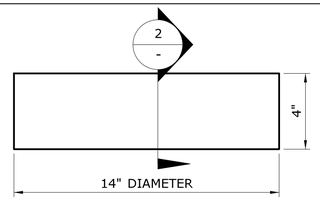

VIEW OF ELASTOMERIC BEARING

SCALE: 3" = 1'-0"

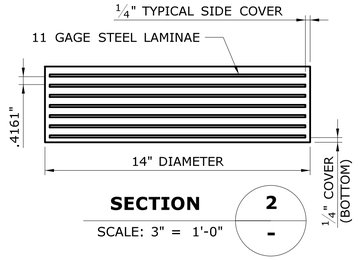

SECTION 2 -

SCALE: 3" = 1'-0"

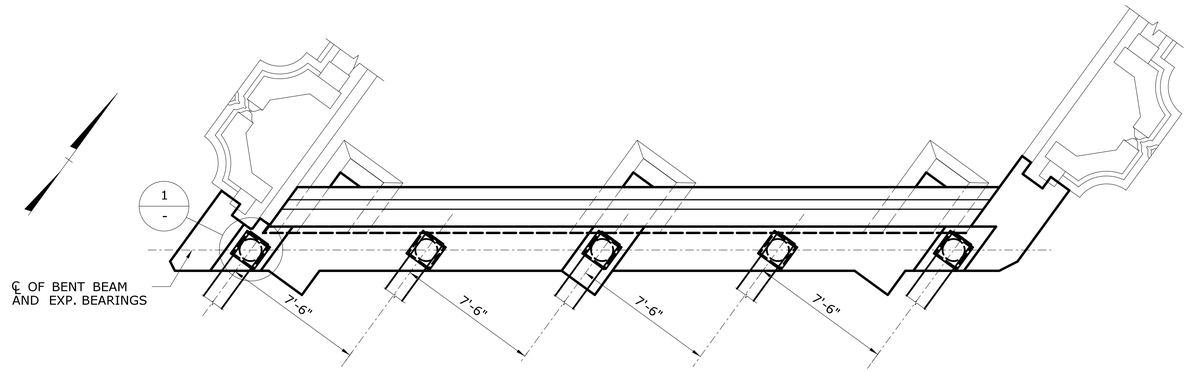

BEARING PLAN VIEW AT NORTH ABUTMENT

SCALE: 1/4" = 1'-0"

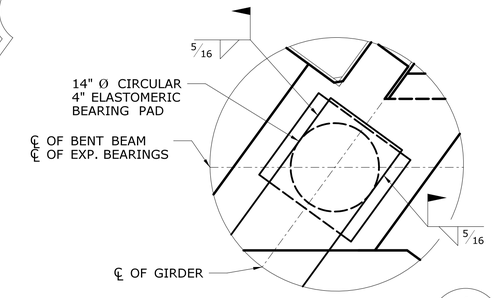

EXPANSION BEARING PLAN 1 -

SCALE: 1" = 1'-0"

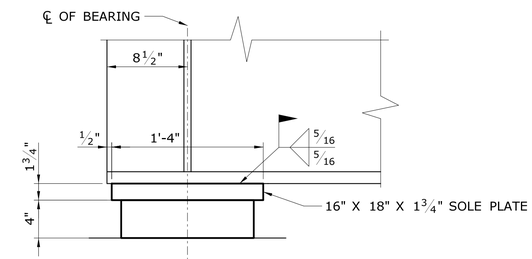

ELEVATION - EXPANSION BEARING

SCALE: 1 1/2" = 1'-0"

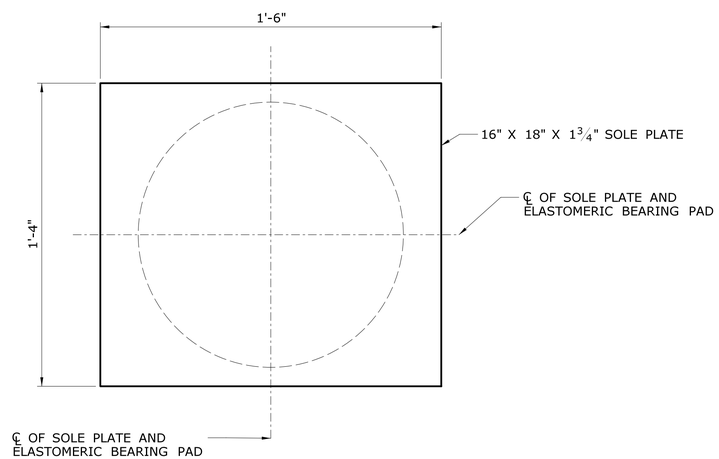

PLAN - EXPANSION BEARING 4 -

SCALE: 3" = 1'-0"

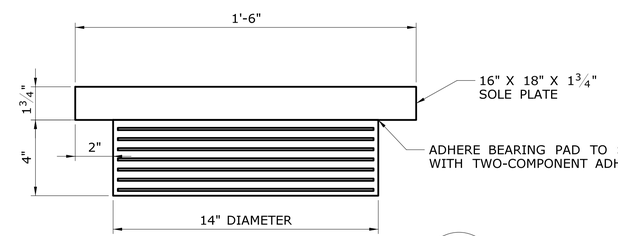

SECTION - EXPANSION BEARING 4 -

SCALE: 3" = 1'-0"

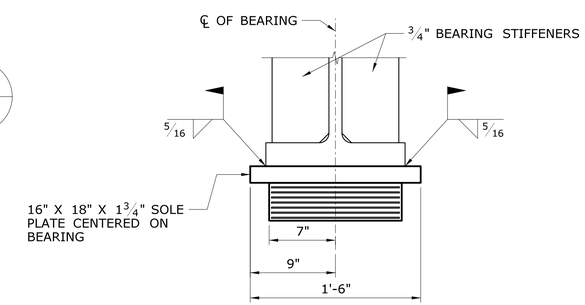

SECTION - EXPANSION BEARING

SCALE: 1 1/2" = 1'-0"

REV.	DATE	REVISION DESCRIPTION	SHEET NO.

THE INFORMATION, INCLUDING ESTIMATED QUANTITIES OF WORK, SHOWN ON THESE SHEETS IS BASED ON LIMITED INVESTIGATIONS BY THE STATE AND IS IN NO WAY WARRANTED TO INDICATE THE CONDITIONS OF ACTUAL QUANTITIES OF WORK WHICH WILL BE REQUIRED.

Plotted Date: 7/18/2017

DESIGNER/DRAFTER: JWP

CHECKED BY: SAB

SCALE AS NOTED

STATE OF CONNECTICUT
DEPARTMENT OF TRANSPORTATION

Filename: ...\0102-0356..S-15..ExpansionBearingDets.dgn

SIGNATURE/BLOCK: OFFICE OF ENGINEERING

APPROVED BY: Mary E. Butler

PROJECT TITLE: REHABILITATION OF BRIDGE NO. 00722 WEST ROCKS RD. OVER ROUTE 15

TOWN: NORWALK

DRAWING TITLE: EXPANSION BEARING DETAILS

PROJECT NO. 0102-0356

DRAWING NO. S-15

SHEET NO. 04.15

	DEAD LOAD DEFLECTIONS			CAMBER	
GIRDER	SELF	PDL	SDL	AT ERECTION	FINAL
G1	0.661	2.257	0.704	3.000	0.039
RB2	0.901	2.825	0.530	3.500	0.145
G3	0.646	2.374	0.453	3.000	0.173
RB4	0.921	2.825	0.471	3.500	0.204
G5	0.648	2.065	0.586	3.000	0.349

"SELF" IS DEFLECTION DUE TO GIRDER SELF WEIGHT, STIFFENERS, AND CONNECTION PLATES.

"PDL" IS DEFLECTION DUE TO PRECOMPOSITE GIRDER LOADS (INCLUDING CONCRETE DECK, DIAPHRAGMS, HAUNCH, UTILITY SUPPORTS, AND WATER MAIN).

"SDL" IS DEFLECTION DUE TO SUPERIMPOSED LOADS (INCLUDING PARAPET, SIDEWALK, WEARING SURFACE, AND RAILING).

CAMBER AT ERECTION IS A RECOMMENDED CAMBER WITH SELF WEIGHT LOAD APPLIED.

FINAL CAMBER IS REMAINING CAMBER AFTER ALL DEAD LOADS ARE APPLIED.

ALL DEFLECTIONS AND CAMBER SHOWN ARE IN INCHES AND COMPUTED AT MIDSPAN.

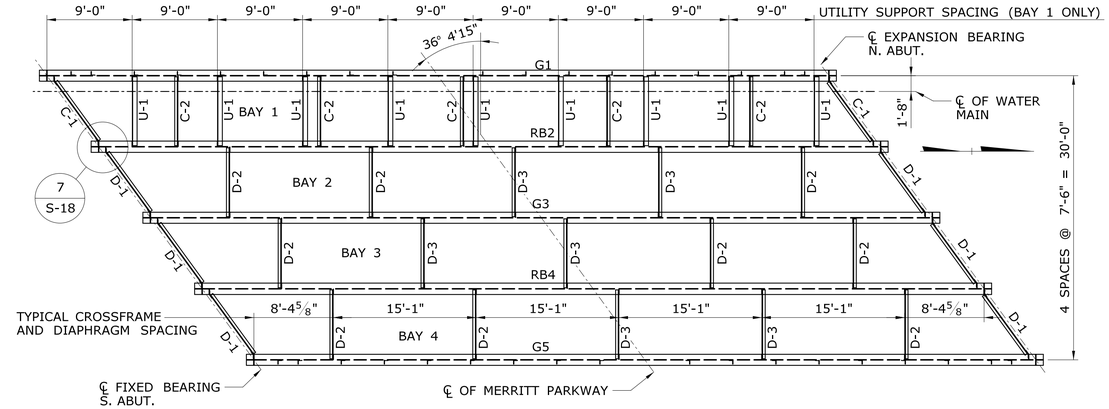

FRAMING PLAN

SCALE: ⅛" = 1'-0"

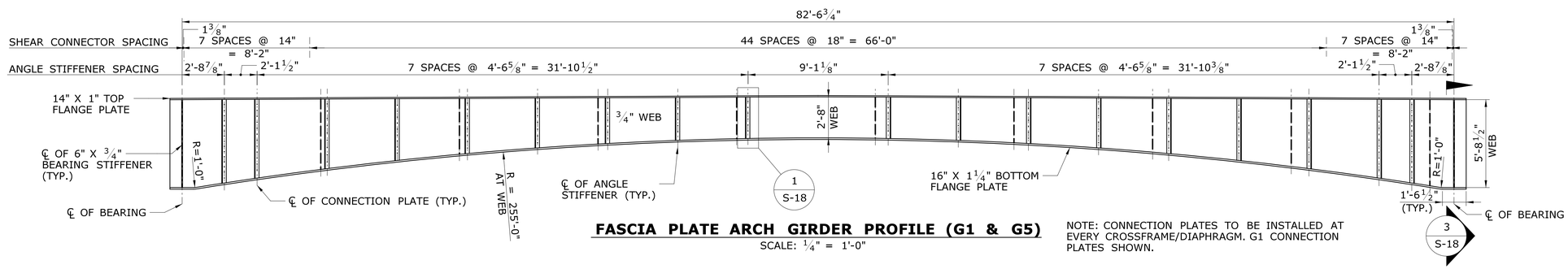

FASCIA PLATE ARCH GIRDER PROFILE (G1 & G5)

SCALE: ¼" = 1'-0"

NOTE: CONNECTION PLATES TO BE INSTALLED AT EVERY CROSSFRAME/DIAPHRAGM. G1 CONNECTION PLATES SHOWN.

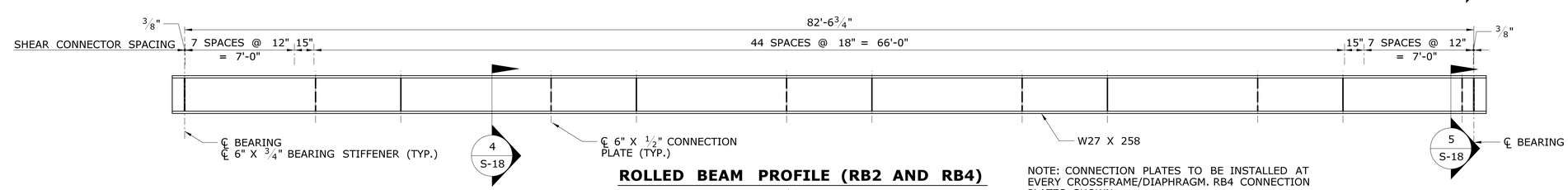

ROLLED BEAM PROFILE (RB2 AND RB4)

SCALE: ¼" = 1'-0"

NOTE: CONNECTION PLATES TO BE INSTALLED AT EVERY CROSSFRAME/DIAPHRAGM. RB4 CONNECTION PLATES SHOWN.

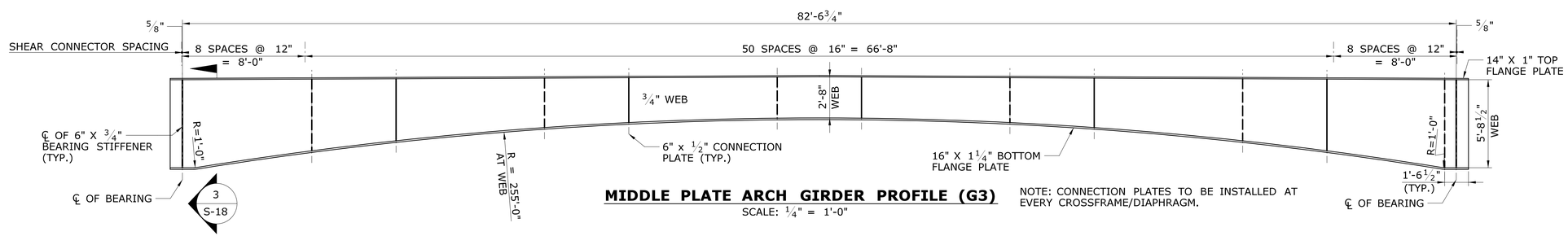

MIDDLE PLATE ARCH GIRDER PROFILE (G3)

SCALE: ¼" = 1'-0"

NOTE: CONNECTION PLATES TO BE INSTALLED AT EVERY CROSSFRAME/DIAPHRAGM.

REV.	DATE	REVISION DESCRIPTION	SHEET NO.

THE INFORMATION, INCLUDING ESTIMATED QUANTITIES OF WORK, SHOWN ON THESE SHEETS IS BASED ON LIMITED INVESTIGATIONS BY THE STATE AND IS IN NO WAY WARRANTED TO INDICATE THE CONDITIONS OF ACTUAL QUANTITIES OF WORK WHICH WILL BE REQUIRED.

Plotted Date: 7/18/2017

DESIGNER/DRAFTER: JWP

CHECKED BY: SAB

SCALE AS NOTED

STATE OF CONNECTICUT
DEPARTMENT OF TRANSPORTATION

Filename: ...\0102-0356..S-16..Girder-FramingPlan.dgn

SIGNATURE/BLOCK: OFFICE OF ENGINEERING

APPROVED BY:

PROJECT TITLE: REHABILITATION OF BRIDGE NO. 00722 WEST ROCKS RD. OVER ROUTE 15

TOWN: NORWALK

DRAWING TITLE: FRAMING PLAN AND GIRDER PROFILE

PROJECT NO. 0102-0356

DRAWING NO. S-16

SHEET NO. 04.16

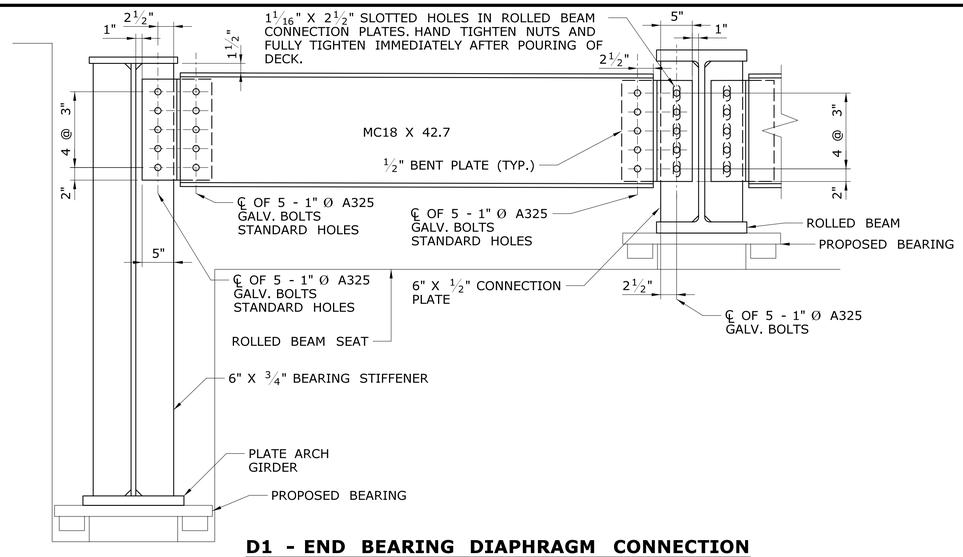

D1 - END BEARING DIAPHRAGM CONNECTION

SCALE: 1" = 1'-0"

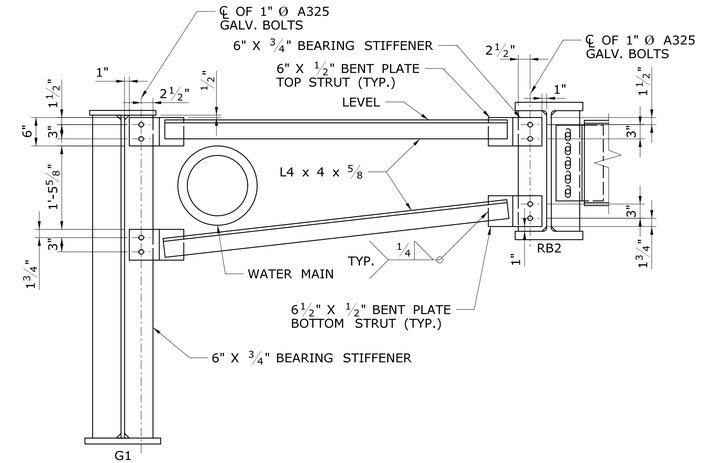

C1 - END BEARING CROSSFRAME CONNECTION BAY 1

SCALE: 3/4" = 1'-0"

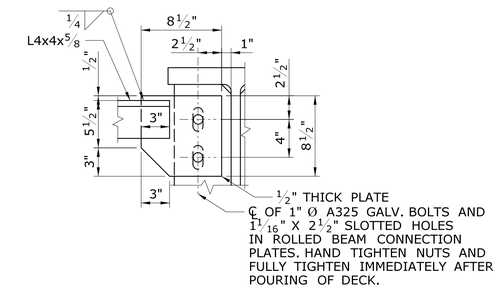

DETAIL 1

SCALE: 1 1/2" = 1'-0"

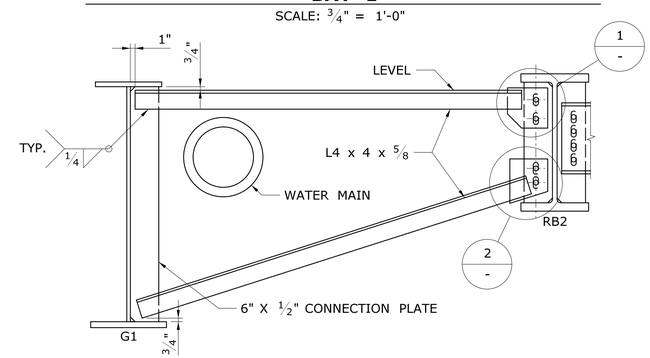

C2 - INTERMEDIATE CROSSFRAME CONNECTION BAY 1

SCALE: 3/4" = 1'-0"

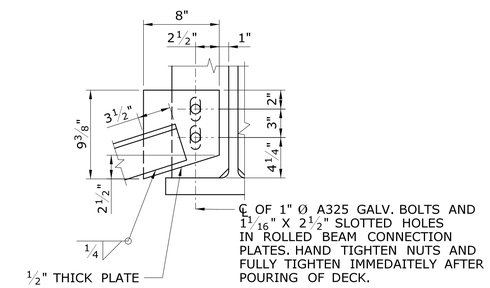

DETAIL 2

SCALE: 1 1/2" = 1'-0"

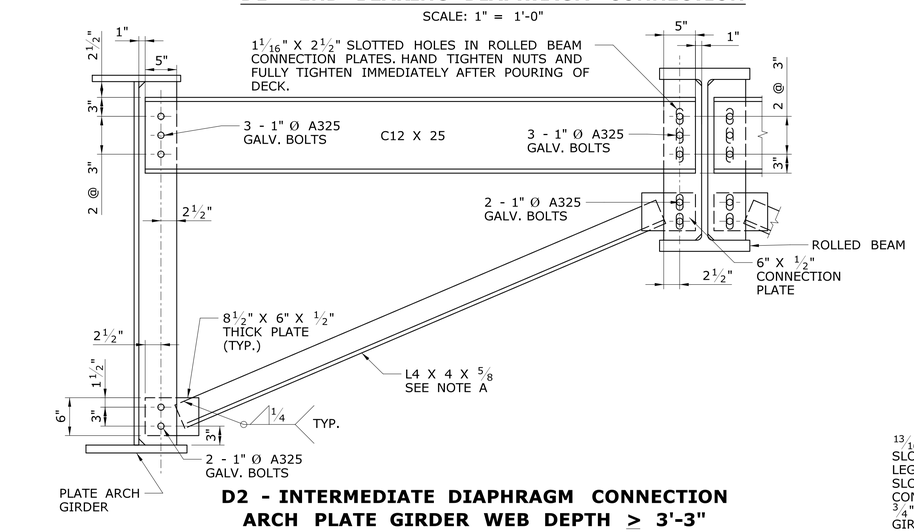

D2 - INTERMEDIATE DIAPHRAGM CONNECTION ARCH PLATE GIRDER WEB DEPTH > 3'-3"

SCALE: 1" = 1'-0"

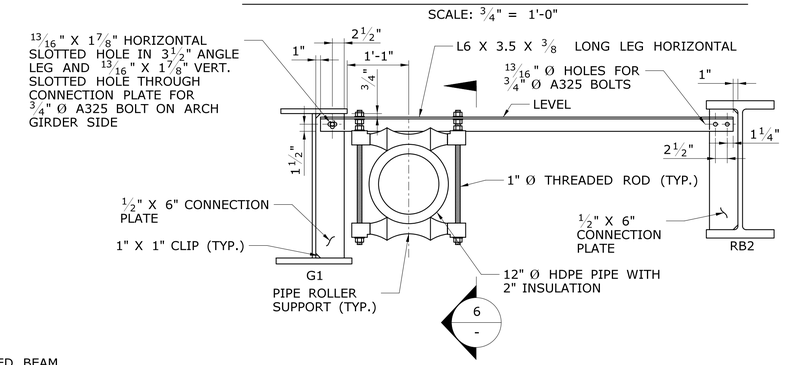

U1 - WATER MAIN SUPPORT

SCALE: 3/4" = 1'-0"

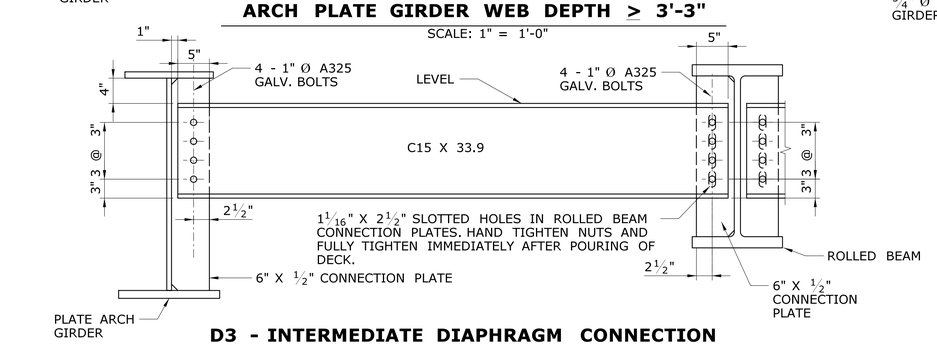

D3 - INTERMEDIATE DIAPHRAGM CONNECTION ARCH PLATE GIRDER WEB DEPTH < 3'-3"

SCALE: 1" = 1'-0"

STEEL NOTES

1) ALL BOLTS USED FOR FASTENING ANGLE STIFFENERS SHALL BE F1852 TYPE 1 ROUND HEAD "TWIST OFF" TYPE TENSION CONTROL STRUCTURAL BOLT/NUT/WASHER ASSEMBLIES. TENSION CONTROL BOLTS SHALL NOT BE GALVANIZED.

2) THE ROUND HEAD OF THE TENSION CONTROL BOLTS SHALL BE INSTALLED ON THE FASCIA OF THE GIRDERS WITH THE NUT AND WASHER ON THE HIDDEN FACE.

3) OTHER BOLTS SHALL CONFORM TO ASTM A325, TYPE 1. NUTS SHALL CONFORM TO ASTM A563. WASHERS SHALL CONFORM TO ASTM F436. THESE COMPONENTS SHALL BE GALVANIZED IN ACCORDANCE WITH ASTM A153.

4) ALL STIFFENER AND CONNECTION PLATE INSTALLATIONS SHALL BE DONE IN THE SHOP TO ACCELERATE CONSTRUCTION DURING ROAD CLOSURE PERIOD.

REV.	DATE	REVISION DESCRIPTION	SHEET NO.

THE INFORMATION, INCLUDING ESTIMATED QUANTITIES OF WORK, SHOWN ON THESE SHEETS IS BASED ON LIMITED INVESTIGATIONS BY THE STATE AND IS IN NO WAY WARRANTED TO INDICATE THE CONDITIONS OF ACTUAL QUANTITIES OF WORK WHICH WILL BE REQUIRED.

Plotted Date: 7/18/2017

DESIGNER/DRAFTER: JWP
CHECKED BY: SAB
SCALE AS NOTED

STATE OF CONNECTICUT
DEPARTMENT OF TRANSPORTATION

Filename: ...\0102-0356_S-17_SteelDets1.dgn

SIGNATURE/BLOCK:
OFFICE OF ENGINEERING
APPROVED BY:

PROJECT TITLE:
REHABILITATION OF BRIDGE NO. 00722
WEST ROCKS RD. OVER ROUTE 15

TOWN: NORWALK

DRAWING TITLE:
MISCELLANEOUS STEEL DETAILS - 1

PROJECT NO. 0102-0356
DRAWING NO. S-17
SHEET NO. 04.17

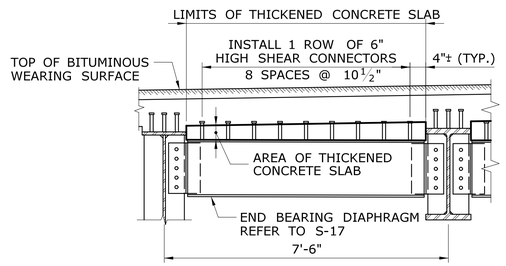

SHEAR CONNECTORS AT END DIAPHRAGMS

SCALE: ½" = 1'-0"

NOTE: DIAPHRAGM D-1 SHOWN. CROSSFRAME C-1 SIMILAR.

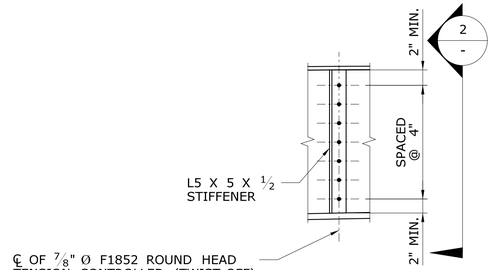

ANGLE STIFFENER DETAIL

1
-

SCALE: ¾" = 1'-0"

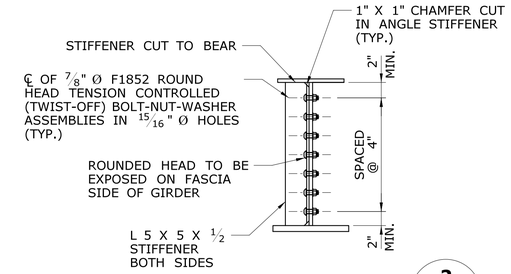

ANGLE STIFFENER SECTION

2
-

SCALE: ¾" = 1'-0"

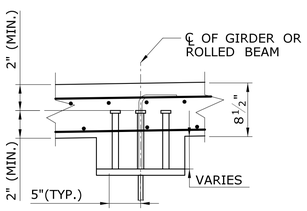

HAUNCH SECTION

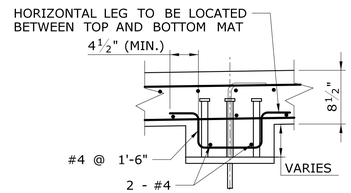

NOTE: HAUNCH REINFORCEMENT ONLY REQUIRED FOR HAUNCH THICKNESSES GREATER THAN 4".

HAUNCH THICKNESS ≥ 4"

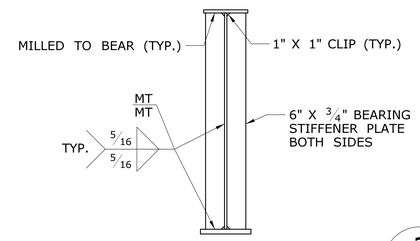

PLATE GIRDER BEARING STIFFENER DETAIL

3
-

SCALE: ½" = 1'-0"

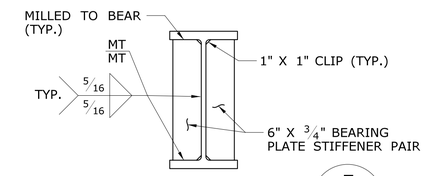

ROLLED BEAM BEARING STIFFENER

5
-

SCALE: ¾" = 1'-0"

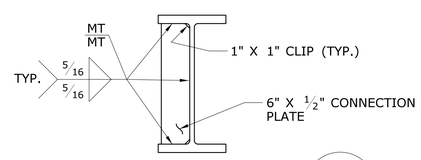

CONNECTION PLATE INSTALLATION

4
-

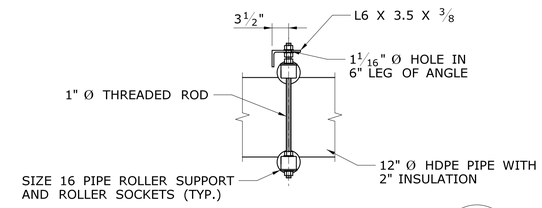

U1 - WATER MAIN SUPPORT SECTION

6
-

SHEAR CONNECTOR NOTES

1) SHEAR STUD DIAMETER SHALL BE 1".

2) CONTRACTOR SHALL DETERMINE SHEAR CONNECTOR LENGTHS AFTER THE NEW GIRDERS HAVE BEEN SURVEYED AND THE PROPOSED HAUNCH DEPTHS CALCULATED.

3) SHEAR CONNECTOR LENGTHS SHALL BE IN 1 INCH INCREMENTS.

4) MAXIMUM UNSTACKED SHEAR CONNECTOR LENGTH SHALL BE 8".

5) MINIMUM SHEAR CONNECTOR LENGTH SHALL BE 4".

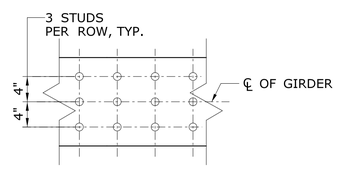

TYPICAL STUD LAYOUT DETAILS PLAN VIEW

SHEAR CONNECTOR DETAILS

SCALE: 1" = 1'-0"

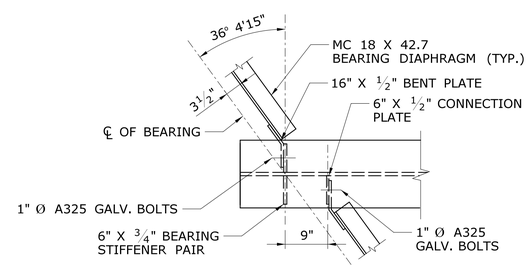

NOTE: ROLLED BEAM SHOWN. ARCH PLATE GIRDERS ARE SIMILAR.

FRAMING DETAILS AT ABUTMENT

7
-

SCALE: ¾" = 1'-0"

STEEL NOTES

1) ALL BOLTS USED FOR FASTENING ANGLE STIFFENERS SHALL BE ASTM F1852 TYPE 1 ROUND HEAD "TWIST OFF" TYPE TENSION CONTROL STRUCTURAL BOLT/NUT/WASHER ASSEMBLIES. TENSION CONTROL BOLTS SHALL NOT BE GALVANIZED.

2) THE ROUND HEAD OF THE TENSION CONTROL BOLTS SHALL BE INSTALLED ON THE FASCIA OF THE GIRDERS WITH THE NUT AND WASHER ON THE HIDDEN FACE.

3) OTHER BOLTS SHALL CONFORM TO ASTM A325, TYPE 1. NUTS SHALL CONFORM TO ASTM A563. WASHERS SHALL CONFORM TO ASTM F436. THESE COMPONENTS SHALL BE GALVANIZED IN ACCORDANCE WITH ASTM A153.

4) IT IS RECOMMENDED THAT ALL STIFFENER AND CONNECTION PLATE INSTALLATIONS BE DONE IN THE SHOP TO ACCELERATE CONSTRUCTION DURING ROAD CLOSURE PERIOD.

REV.	DATE	REVISION DESCRIPTION	SHEET NO.

THE INFORMATION, INCLUDING ESTIMATED QUANTITIES OF WORK, SHOWN ON THESE SHEETS IS BASED ON LIMITED INVESTIGATIONS BY THE STATE AND IS IN NO WAY WARRANTED TO INDICATE THE CONDITIONS OF ACTUAL QUANTITIES OF WORK WHICH WILL BE REQUIRED.

Plotted Date: 7/18/2017

DESIGNER/DRAFTER: JWP

CHECKED BY: SAB

SCALE AS NOTED

STATE OF CONNECTICUT
DEPARTMENT OF TRANSPORTATION

Filename: ...\0102-0356_S-18_SteelDets2.dgn

SIGNATURE/BLOCK: OFFICE OF ENGINEERING

APPROVED BY: Mary E. Beck

PROJECT TITLE: REHABILITATION OF BRIDGE NO. 00722 WEST ROCKS RD. OVER ROUTE 15

TOWN: NORWALK

DRAWING TITLE: MISCELLANEOUS STEEL DETAILS - 2

PROJECT NO. 0102-0356

DRAWING NO. S-18

SHEET NO. 04.18

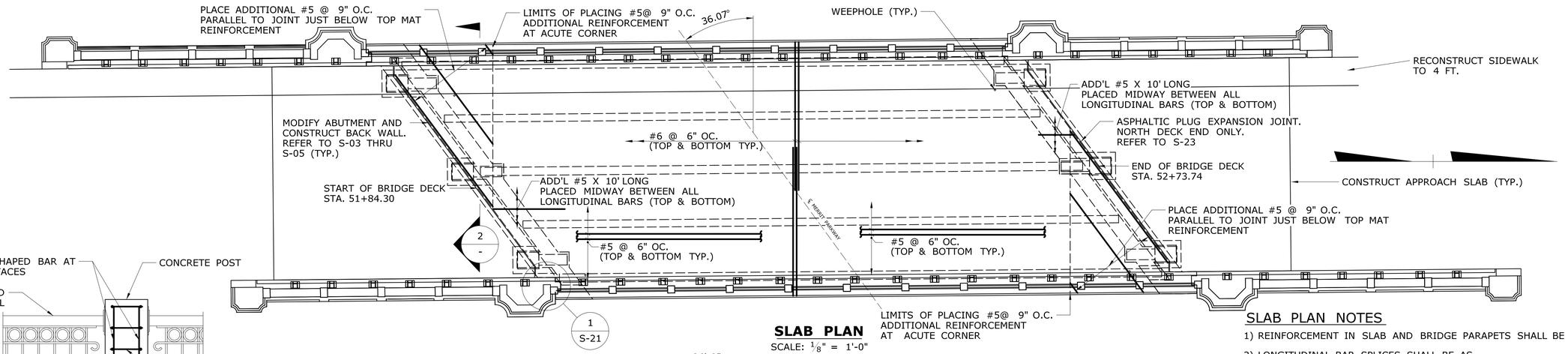

SLAB PLAN

SCALE: 1/8" = 1'-0"

SLAB PLAN NOTES

1) REINFORCEMENT IN SLAB AND BRIDGE PARAPETS SHALL BE GALVANIZED.

2) LONGITUDINAL BAR SPLICES SHALL BE AS FOLLOWS:
   #4=2'-2" #6=3'-0"
   #5=2'-7" #7=4'-0"
   THESE SPLICES SHALL BE ALTERNATED SO THAT 50% OR LESS OF THE BARS ARE SPECIFIED AT THE SAME LOCATION.

3) ALL BARS IN PARAPET SHALL HAVE 2" COVER, EXCEPT AS NOTED.

4) REINFORCEMENT AND DIMENSIONS FOR BOTH PARAPETS ARE TYPICAL.

5) MEMBRANE WATERPROOFING SHALL EXTEND 2" UP CURB.

TIE-DOWN NOTES:

1) TIE-DOWN BARS DO NOT ELIMINATE THE USE OF CHAIRS FOR SUPPORT.

2) TIE-DOWN BARS AND LONGITUDINAL BARS SHALL CLEAR SHEAR CONNECTORS.

3) THE COST OF FURNISHING AND PLACING TIE-DOWN BARS TO BE INCLUDED IN THE ITEM, "DEFORMED STEEL BARS-GALVANIZED".

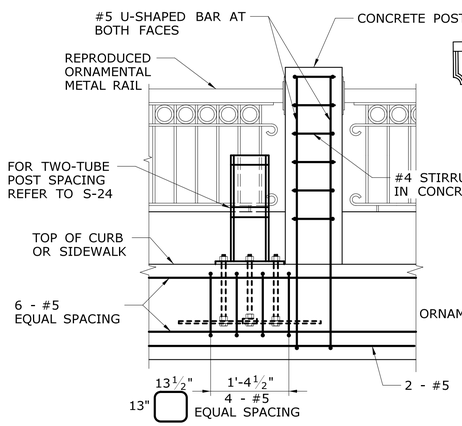

CONCRETE POST AND TWO-TUBE RAIL REINFORCEMENT ELEVATION

SCALE: 3/4" = 1'-0"

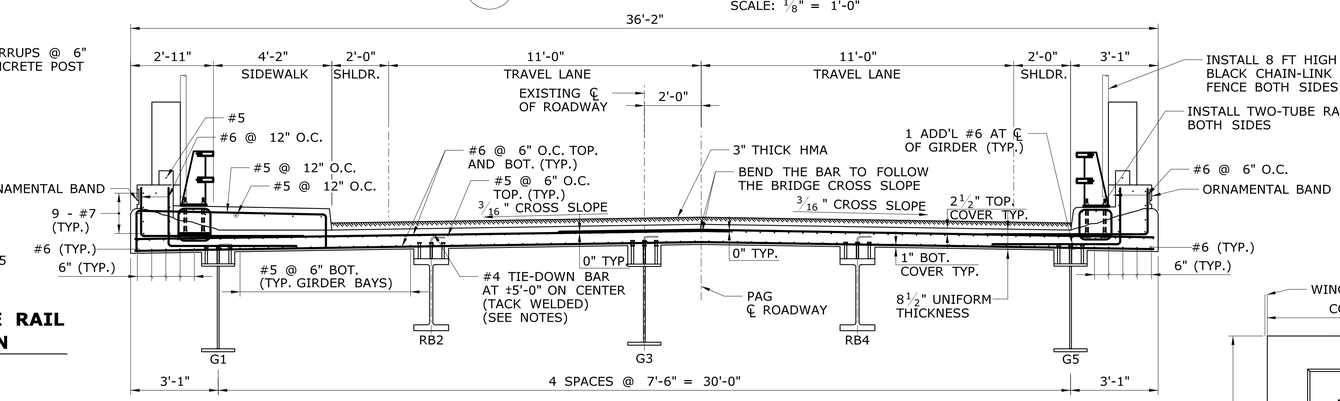

PROPOSED CROSS SECTION LOOKING NORTH

SCALE: 3/8" = 1'-0"

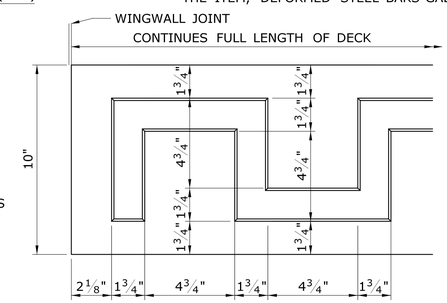

ORNAMENTAL BAND DETAIL

SCALE: 3" = 1'-0"

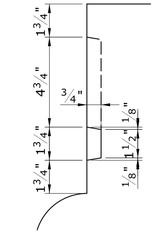

SECTION

SCALE: 3" = 1'-0"

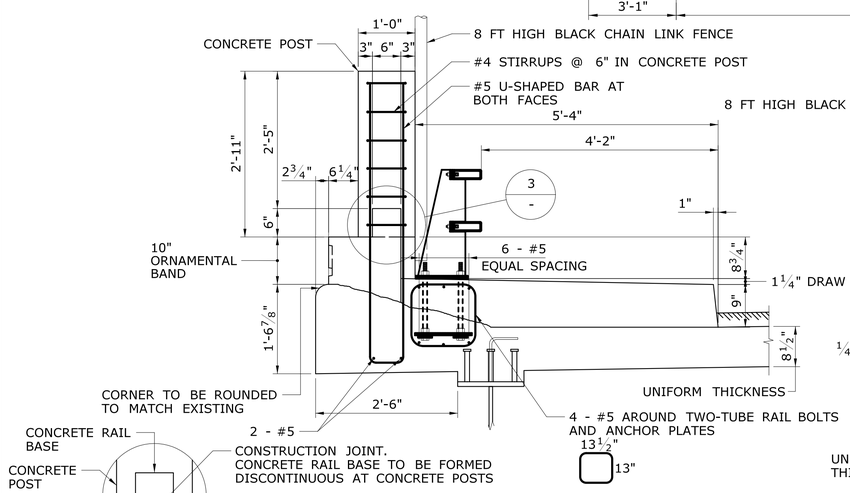

NOTE: REINFORCEMENT SHOWN IS SIMILAR IN EAST PARAPET.

WEST PARAPET SECTION

SCALE: 3/4" = 1'-0"

JOINT DETAIL

SCALE: 1" = 1'-0"

3 -

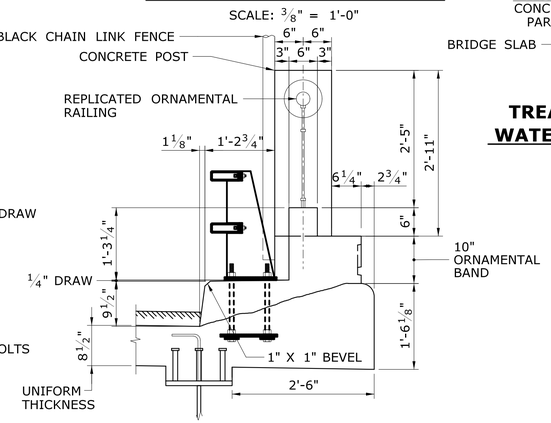

NOTE: REINFORCEMENT SIMILAR TO WEST PARAPET.

EAST PARAPET SECTION

SCALE: 3/4" = 1'-0"

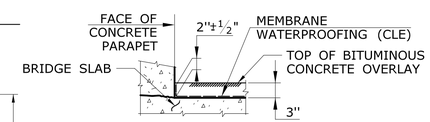

TREATMENT OF MEMBRANE WATERPROOFING AT GUTTER

SCALE: 1 1/2" = 1'-0"

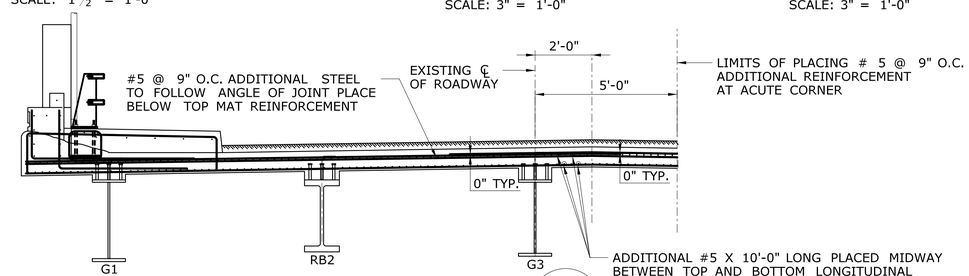

ACUTE CORNER DECK SECTION

SCALE: 3/8" = 1'-0"

2 -

REV.	DATE	REVISION DESCRIPTION	SHEET NO.

THE INFORMATION, INCLUDING ESTIMATED QUANTITIES OF WORK, SHOWN ON THESE SHEETS IS BASED ON LIMITED INVESTIGATIONS BY THE STATE AND IS IN NO WAY WARRANTED TO INDICATE THE CONDITIONS OF ACTUAL QUANTITIES OF WORK WHICH WILL BE REQUIRED.

Plotted Date: 7/18/2017

DESIGNER/DRAFTER: JWP
CHECKED BY: SAB
SCALE AS NOTED

STATE OF CONNECTICUT
DEPARTMENT OF TRANSPORTATION

Filename: ...\0102-0356_S-19_Deck.dgn

SIGNATURE/BLOCK: OFFICE OF ENGINEERING
APPROVED BY: Mary E. Beck

PROJECT TITLE: REHABILITATION OF BRIDGE NO. 00722 WEST ROCKS RD. OVER ROUTE 15

TOWN: NORWALK

DRAWING TITLE: DECK SLAB DETAILS

PROJECT NO. 0102-0356
DRAWING NO. S-19
SHEET NO. 04.19

FINISHED SLAB ELEVATIONS

SPAN LENGTH L = 82'-6¾"

BEAM MARK	℄ BRG. S. ABUT.	1/10L	2/10L	3/10L	4/10L	5/10L	6/10L	7/10L	8/10L	9/10L	℄ BRG. N. ABUT.
G1	227.29	227.35	227.40	227.45	227.48	227.50	227.51	227.52	227.51	227.49	227.46
RB2	227.45	227.50	227.55	227.59	227.61	227.63	227.63	227.63	227.61	227.59	227.55
G3	227.60	227.65	227.69	227.72	227.74	227.75	227.74	227.73	227.71	227.68	227.64
RB4	227.58	227.62	227.65	227.68	227.69	227.69	227.69	227.68	227.66	227.59	227.55
G5	227.50	227.53	227.56	227.57	227.58	227.57	227.56	227.53	227.50	227.45	227.40

NOTES:
1. SLAB ELEVATIONS ARE GIVEN OVER THE ℄ OF BEAM AT THE TOP OF THE CONCRETE SLAB.
2. L=SPAN LENGTH MEASURED HORIZONTALLY ALONG ℄ OF BEAM FROM ℄ TO ℄ BEARING.

DEAD LOAD DEFLECTIONS (FEET)

SPAN LENGTH L = 82'-6¾"

BEAM MARK		℄ BRG. S. ABUT.	1/10L	2/10L	3/10L	4/10L	5/10L	6/10L	7/10L	8/10L	9/10L	℄ BRG. N. ABUT.
G1	DL	0.000	0.048	0.093	0.132	0.160	0.170	0.160	0.133	0.094	0.048	0.000
	SDL	0.000	0.017	0.033	0.046	0.055	0.059	0.055	0.046	0.033	0.017	0.000
	TOTAL	0.000	0.065	0.126	0.179	0.215	0.229	0.216	0.179	0.127	0.065	0.000
RB2	DL	0.000	0.071	0.134	0.183	0.214	0.224	0.213	0.182	0.133	0.070	0.000
	SDL	0.000	0.014	0.027	0.036	0.042	0.044	0.041	0.034	0.024	0.013	0.000
	TOTAL	0.000	0.085	0.160	0.219	0.256	0.268	0.255	0.216	0.157	0.083	0.000
G3	DL	0.000	0.055	0.106	0.151	0.182	0.194	0.182	0.151	0.106	0.055	0.000
	SDL	0.000	0.011	0.022	0.030	0.036	0.038	0.036	0.030	0.021	0.011	0.000
	TOTAL	0.000	0.066	0.128	0.181	0.218	0.231	0.218	0.181	0.128	0.066	0.000
RB4	DL	0.000	0.073	0.137	0.187	0.220	0.231	0.220	0.188	0.137	0.073	0.000
	SDL	0.000	0.011	0.022	0.031	0.037	0.039	0.038	0.032	0.023	0.012	0.000
	TOTAL	0.000	0.084	0.159	0.218	0.256	0.270	0.257	0.220	0.161	0.085	0.000
G5	DL	0.000	0.048	0.094	0.133	0.160	0.170	0.160	0.133	0.093	0.048	0.000
	SDL	0.000	0.014	0.027	0.038	0.046	0.049	0.046	0.039	0.028	0.015	0.000
	TOTAL	0.000	0.063	0.121	0.172	0.207	0.219	0.206	0.171	0.121	0.063	0.000

DL: DEAD LOAD DEFLECTIONS DUE TO ONLY WET CONCRETE.
SDL: SUPERIMPOSED (COMPOSITE) DEAD LOAD DEFLECTIONS DUE TO PARAPETS, SIDEWALK, TWO-TUBE RAILING AND BITUMINOUS CONCRETE.

HAUNCH THICKNESS NOTES:

1. PRIOR TO PLACING SLAB FORMS, THE CONTRACTOR SHALL TAKE ELEVATIONS ALONG THE TOP OF BEAMS AT THE NOTED DELINEATIONS (E.G. - 10TH POINTS, 12TH POINTS, 14TH POINTS, ETC.)

2. THE HAUNCH THICKNESS SHALL BE DETERMINED AS FOLLOWS:

   FINISHED SLAB ELEVATION = A (SEE TABLE ABOVE)
   SLAB THICKNESS = C (FEET)
   TOP OF BEAM ELEVATION = D (FIELD MEASUREMENT)
   TOTAL DL AND SDL DEFLECTION = E (FEET)
   HAUNCH THICKNESS = [A - C] + (E IN FEET) - D

3. THE MINIMUM HAUNCH SHALL BE 1 INCH (0.083 FT.). DURING CONSTRUCTION, IF IT IS DETERMINED THE MINIMUM HAUNCH CANNOT BE MAINTAINED, THE ENGINEER SHALL BE NOTIFIED IMMEDIATELY.

4. IF THE HAUNCH THICKNESS EXCEEDS 4 INCHES, INSTALL ADDITIONAL HAUNCH REINFORCEMENT IN ACCORDANCE WITH DETAILS ON DRAWING S-18.

5. THE DEAD LOAD DEFLECTIONS ON THIS SHEET ARE BASED ON THE CONSTRUCTION PHASING ON S-04. IF THIS IS REVISED DURING CONSTRUCTION THEN THE DEAD LOAD DEFLECTIONS SHOWN ON THIS SHEET MUST ALSO BE REVISED.

6. STAY IN PLACE FORMS ARE NOT ALLOWED TO BE USED TO RECONSTRUCT THE BRIDGE DECK.

7. THE CONTRACTOR SHALL PERFORM A FIELD SURVEY AFTER INSTALLATION OF ALL STRUCTURAL STEEL TO VERIFY TOP OF BEAM ELEVATIONS PRIOR TO INSTALLATION OF SHEAR STUDS. HAUNCH HEIGHTS SHOWN ARE FOR REFERENCE ONLY. SHOULD HAUNCH HEIGHTS DIFFER BY GREATER THAN 1 INCH THAN THOSE SHOWN, THE ENGINEER SHALL BE NOTIFIED.

8. SHOULD THE CONTRACTOR'S SHEAR STUD SUBMITTAL BE BASED SOLELY OFF OF THE PROVIDED HAUNCH HEIGHTS AND THE CONTRACTOR OPTS TO ORDER PRIOR TO THE FIELD SURVEY, THE CONTRACTOR SHALL USE SHEAR STUDS TOWARDS THE LONGER END OF THE ALLOWED RANGE. SHOULD THE FIELD VERIFICATION SURVEY INDICATE SHORTER HAUNCHES, THE APPROPRIATE SHEAR STUDS SHALL BE CUT.

PROPOSED TOP OF BEAM ELEVATIONS

SPAN LENGTH L = 82'-6¾"

BEAM MARK	℄ BRG. S. ABUT.	1/10L	2/10L	3/10L	4/10L	5/10L	6/10L	7/10L	8/10L	9/10L	℄ BRG. N. ABUT.
G1	226.468	226.537	226.588	226.621	226.639	226.645	226.639	226.621	226.588	226.537	226.468
RB2	226.593	226.671	226.728	226.767	226.790	226.798	226.791	226.768	226.728	226.671	226.593
G3	226.468	226.541	226.596	226.633	226.653	226.660	226.653	226.633	226.596	226.541	226.468
RB4	226.593	226.672	226.731	226.772	226.795	226.803	226.795	226.771	226.731	226.672	226.593
G5	226.468	226.542	226.597	226.634	226.655	226.662	226.656	226.635	226.597	226.542	226.468

TOP OF BEAM ELEVATIONS (CONTRACTOR'S FIELD SURVEY)

SPAN LENGTH L = 82'-6¾"

BEAM MARK	℄ BRG. S. ABUT.	1/10L	2/10L	3/10L	4/10L	5/10L	6/10L	7/10L	8/10L	9/10L	℄ BRG. N. ABUT.
G1											
RB2											
G3											
RB4											
G5											

PROPOSED HAUNCH HEIGHT (FEET)

SPAN LENGTH L = 82'-6¾"

BEAM MARK	℄ BRG. S. ABUT.	1/10L	2/10L	3/10L	4/10L	5/10L	6/10L	7/10L	8/10L	9/10L	℄ BRG. N. ABUT.
G1	0.111	0.171	0.233	0.296	0.345	0.376	0.381	0.366	0.337	0.308	0.282
RB2	0.147	0.210	0.275	0.329	0.369	0.390	0.389	0.368	0.333	0.291	0.250
G3	0.424	0.466	0.513	0.557	0.594	0.609	0.601	0.573	0.534	0.494	0.459
RB4	0.276	0.324	0.371	0.414	0.441	0.449	0.443	0.422	0.384	0.299	0.244
G5	0.319	0.343	0.374	0.402	0.421	0.422	0.400	0.361	0.312	0.263	0.219

COMPUTED HAUNCH HEIGHT (FEET)

SPAN LENGTH L = 82'-6¾"

BEAM MARK	℄ BRG. S. ABUT.	1/10L	2/10L	3/10L	4/10L	5/10L	6/10L	7/10L	8/10L	9/10L	℄ BRG. N. ABUT.
G1											
RB2											
G3											
RB4											
G5											

REV.	DATE	REVISION DESCRIPTION	SHEET NO.

THE INFORMATION, INCLUDING ESTIMATED QUANTITIES OF WORK, SHOWN ON THESE SHEETS IS BASED ON LIMITED INVESTIGATIONS BY THE STATE AND IS IN NO WAY WARRANTED TO INDICATE THE CONDITIONS OF ACTUAL QUANTITIES OF WORK WHICH WILL BE REQUIRED.

Plotted Date: 7/18/2017

DESIGNER/DRAFTER: JWP
CHECKED BY: SAB
SCALE AS NOTED

STATE OF CONNECTICUT
DEPARTMENT OF TRANSPORTATION

Filename: ...\0102-0356_S-20_Deflections.dgn

SIGNATURE/BLOCK:
OFFICE OF ENGINEERING
APPROVED BY:

PROJECT TITLE:
REHABILITATION OF BRIDGE NO. 00722
WEST ROCKS RD. OVER ROUTE 15

TOWN: NORWALK

DRAWING TITLE: SLAB ELEVATIONS

PROJECT NO. 0102-0356
DRAWING NO. S-20
SHEET NO. 04.20

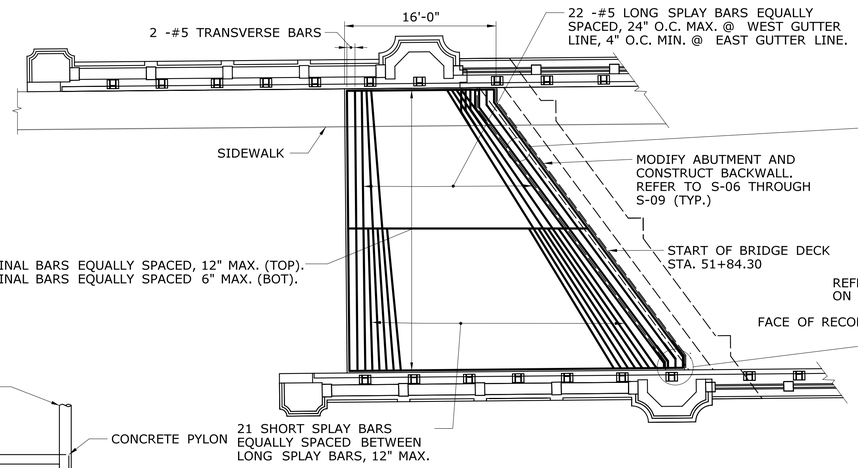

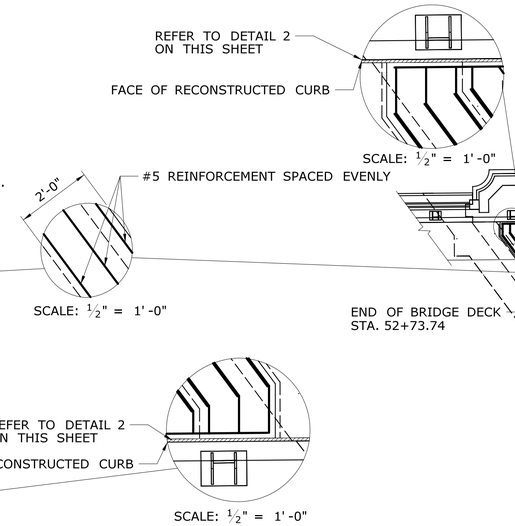

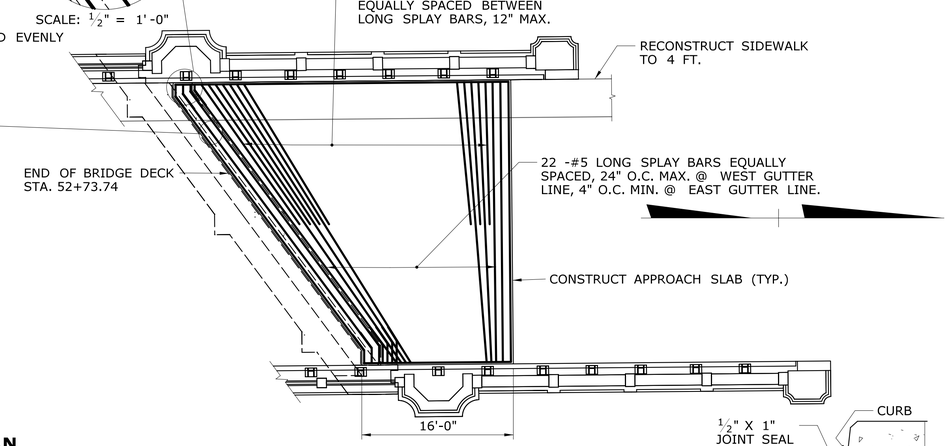

APPROACH SLAB PLAN

SCALE: 1/8" = 1'-0"

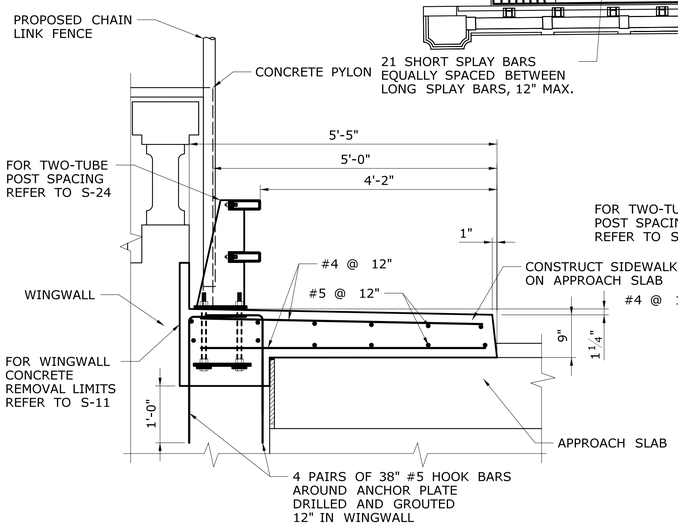

SIDEWALK ON APPROACH SLAB SECTION

SCALE: 3/4" = 1'-0"

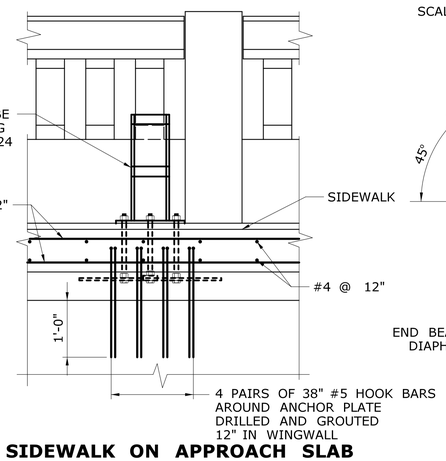

SIDEWALK ON APPROACH SLAB ELEVATION

SCALE: 3/4" = 1'-0"

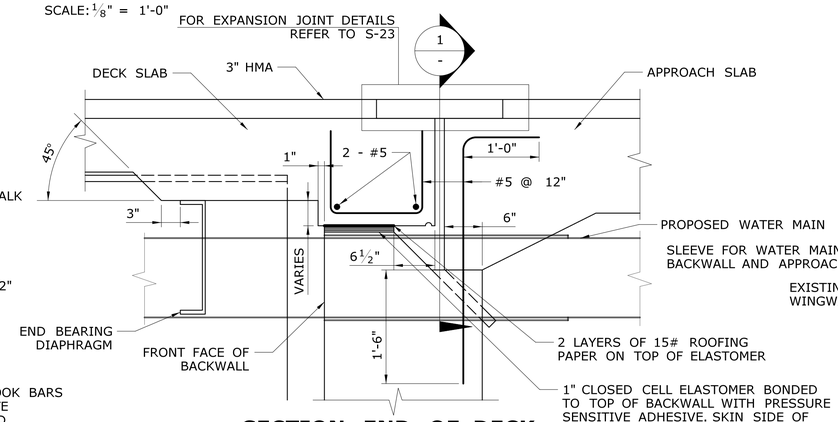

SECTION END OF DECK

SCALE: 1" = 1'-0"

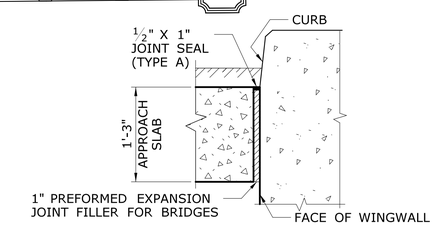

DETAIL 2 -

SCALE: 1" = 1'-0"

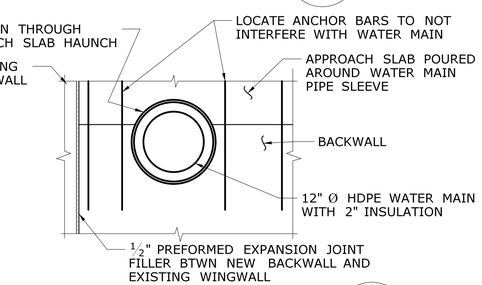

BACKWALL AT WATER MAIN 1 -

SCALE: 3/4" = 1'-0"

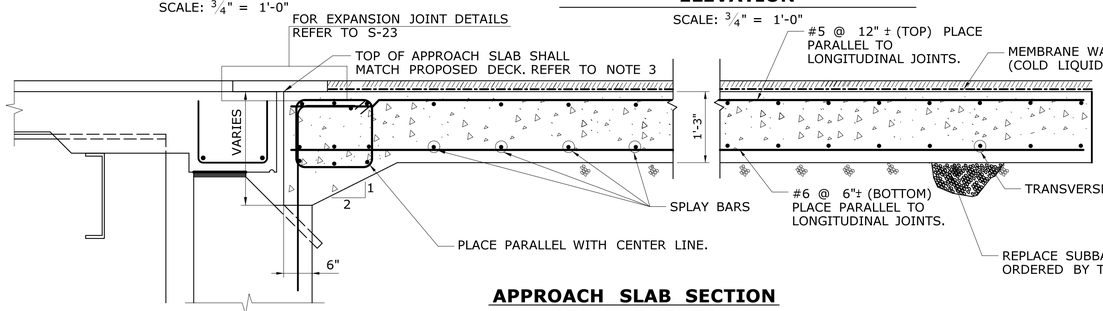

APPROACH SLAB SECTION AT ABUTMENTS

SCALE: 3/4" = 1'-0"

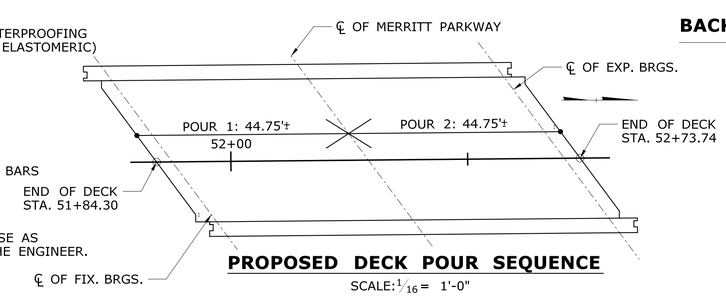

PROPOSED DECK POUR SEQUENCE

SCALE: 1/16 = 1'-0"

NOTE: BOTH POURS INDICATED SHALL BE DONE CONCURRENTLY.

NOTES:

1. REINFORCEMENT SHALL BE PAID FOR UNDER ITEM "DEFORMED STEEL BARS-GALVANIZED". NEW CONCRETE SHALL BE PAID FOR UNDER ITEM "CLASS "F" CONCRETE".

2. ALL REINFORCING SHALL BE GALVANIZED.

3. THE TOP SURFACE OF THE CONCRETE PAVEMENT SHALL BE CONSTRUCTED SUCH THAT IT IS FLUSH WITH THE DECK SLAB AND CONFORMS TO THE CROSS SLOPES ON THE BRIDGE DECK. IN addition, THE CONCRETE PAVEMENT SHALL RECEIVE MEMBRANE WATERPROOFING (COLD LIQUID ELASTOMERIC).

REV.	DATE	REVISION DESCRIPTION	SHEET NO.

THE INFORMATION, INCLUDING ESTIMATED QUANTITIES OF WORK, SHOWN ON THESE SHEETS IS BASED ON LIMITED INVESTIGATIONS BY THE STATE AND IS IN NO WAY WARRANTED TO INDICATE THE CONDITIONS OF ACTUAL QUANTITIES OF WORK WHICH WILL BE REQUIRED.

Plotted Date: 7/18/2017

DESIGNER/DRAFTER: JWP/SAB
CHECKED BY: SAB
SCALE AS NOTED

STATE OF CONNECTICUT
DEPARTMENT OF TRANSPORTATION

Filename: ..\0102-0356_S-21_ApproachSlab.dgn

SIGNATURE/BLOCK: OFFICE OF ENGINEERING
APPROVED BY: Mary E. Beck

PROJECT TITLE: REHABILITATION OF BRIDGE NO. 00722 WEST ROCKS RD. OVER ROUTE 15

TOWN: NORWALK

DRAWING TITLE: APPROACH SLAB DETAILS

PROJECT NO. 0102-0356
DRAWING NO. S-21
SHEET NO. 04.21

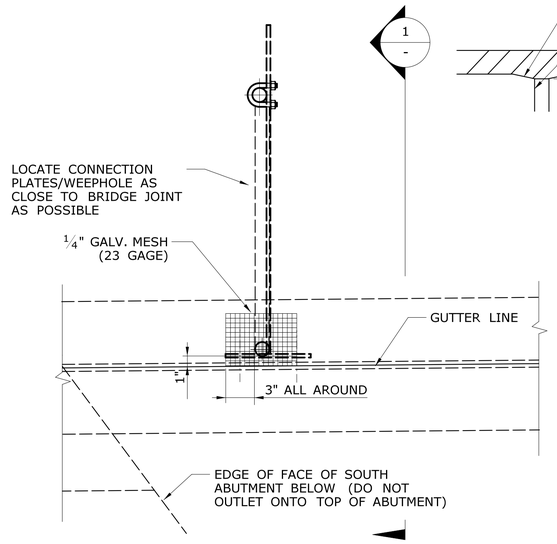

ON SOUTH SIDE

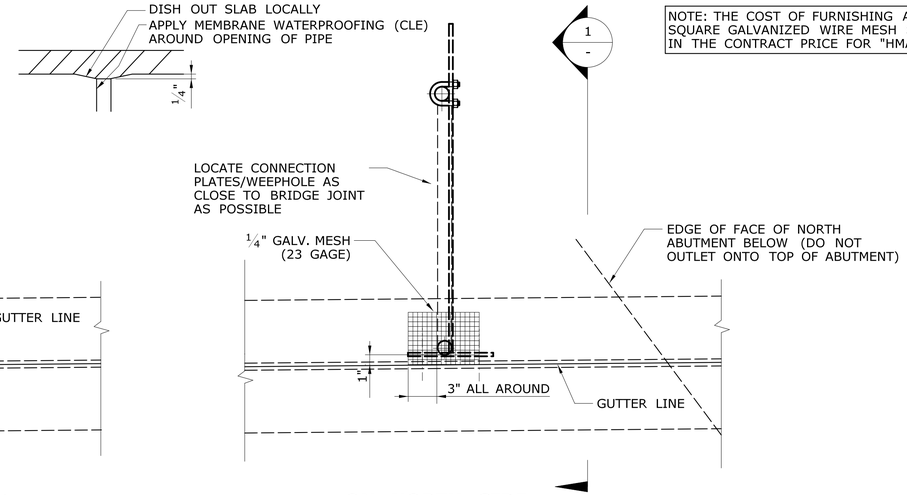

ON NORTH SIDE

NOTE: THE COST OF FURNISHING AND INSTALLING 1/4" SQUARE GALVANIZED WIRE MESH SHALL BE INCLUDED IN THE CONTRACT PRICE FOR "HMA S0.5"

TYPICAL WEEPHOLE INSTALLATION NEAR JOINT PLATE GIRDER ATTACHMENT

SCALE: 1 1/2" = 1'-0"

✳ COST OF STEEL PLATES, HARDWARE, FLEXIBLE RUBBER HOSE, AND DRILLING HOLES IN GIRDER/BEAM WEBS TO BE INCLUDED IN THE LINEAR FOOT COST FOR ITEM: 1 1/2" POLYVINYL CHLORIDE PLASTIC PIPE

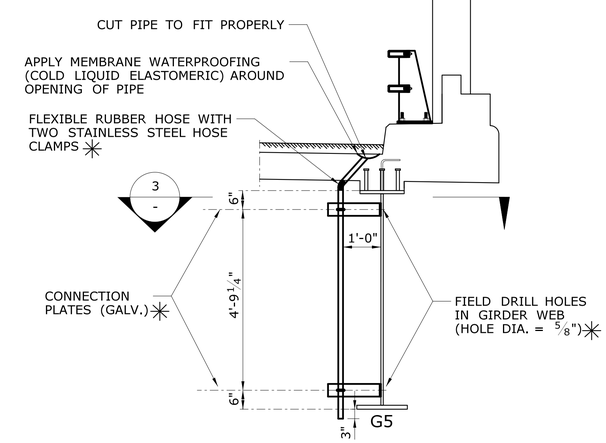

SECTION EAST SIDE (1 / —)

SCALE: 1/2" = 1'-0"

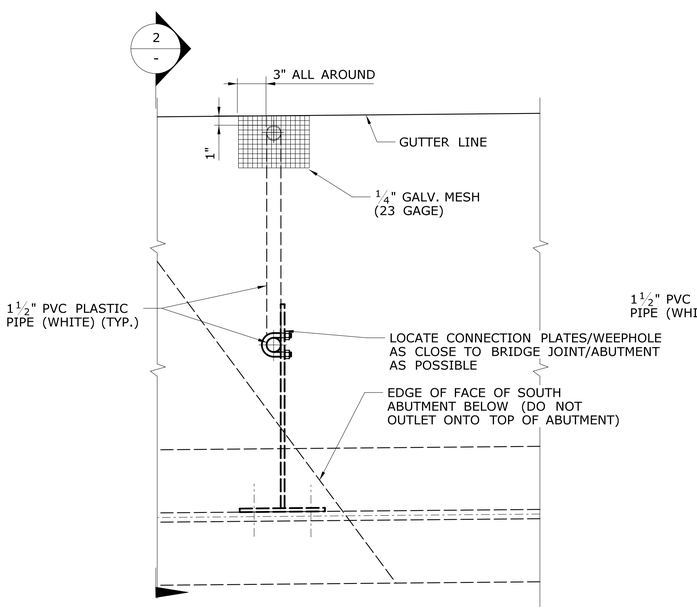

ON SOUTH SIDE

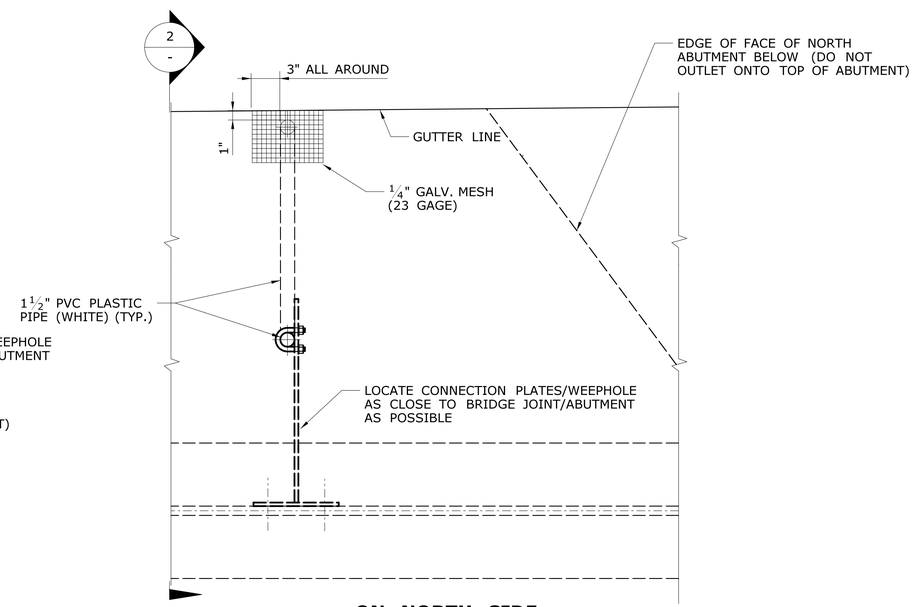

ON NORTH SIDE

TYPICAL WEEPHOLE INSTALLATION ROLLED BEAM ATTACHMENT

SCALE: 1 1/2" = 1'-0"

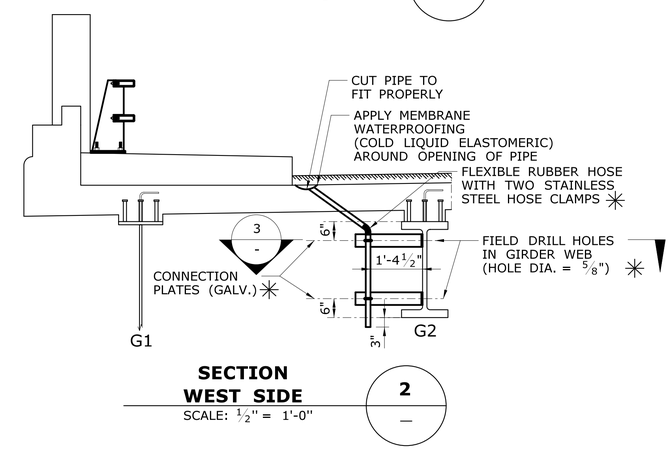

SECTION WEST SIDE (2 / —)

SCALE: 1/2" = 1'-0"

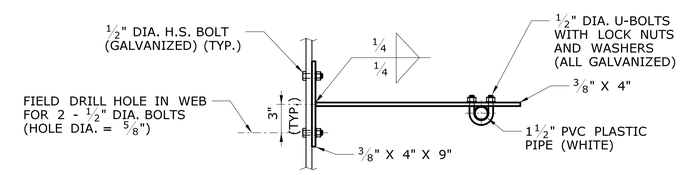

SECTION CONNECTION PLATES (3 / —)

SCALE: 1 1/2" = 1'-0"

REV.	DATE	REVISION DESCRIPTION	SHEET NO.

THE INFORMATION, INCLUDING ESTIMATED QUANTITIES OF WORK, SHOWN ON THESE SHEETS IS BASED ON LIMITED INVESTIGATIONS BY THE STATE AND IS IN NO WAY WARRANTED TO INDICATE THE CONDITIONS OF ACTUAL QUANTITIES OF WORK WHICH WILL BE REQUIRED.

Plotted Date: 7/18/2017

DESIGNER/DRAFTER: JWP
CHECKED BY: SAB
SCALE AS NOTED

STATE OF CONNECTICUT
DEPARTMENT OF TRANSPORTATION

Filename: ...\0102-0356_S-22_Weepholes.dgn

SIGNATURE/BLOCK: OFFICE OF ENGINEERING
APPROVED BY:

PROJECT TITLE: REHABILITATION OF BRIDGE NO. 00722 WEST ROCKS RD. OVER ROUTE 15

TOWN: NORWALK

DRAWING TITLE: WEEPHOLE DETAILS

PROJECT NO. 0102-0356
DRAWING NO. S-22
SHEET NO. 04.22

JOINT WORK FOR BRIDGE

1. ALL WORK TO REMOVE HOT MIX ASPHALT (H.M.A.) WEARING SURFACE, REMOVE AND DISPOSE OF H.M.A. WEARING SURFACE SHALL BE INCLUDED IN THE COST OF "ASPHALTIC PLUG EXPANSION JOINT SYSTEM".
2. MEMBRANE WATERPROOFING SHALL BE "MEMBRANE WATERPROOFING (COLD LIQUID ELASTOMERIC)" AND SHALL BE PLACED PRIOR TO PLACEMENT OF HMA. THE CONTRACTOR MAY MASK OFF THE LIMITS OF THE NEW BRIDGE JOINTS DURING CONSTRUCTION AS APPROVED BY THE ENGINEER.
3. NEW JOINT ELEMENTS SHALL NOT BE INSTALLED UNTIL AFTER PAVING OPERATIONS ARE COMPLETED.

ASPHALTIC PLUG EXPANSION JOINT SYSTEM NOTES

1. A BRIDGING PLATE SHALL BE USED TO SPAN THE JOINT BETWEEN A DECK END AND THE CONCRETE APPROACH SLAB.
2. NEW STEEL BRIDGING PLATES SHALL HAVE A MINIMUM THICKNESS OF $\frac{1}{4}$". FOR JOINT OPENINGS THAT EXCEED 3" A $\frac{3}{8}$" THICK BY 12" WIDE PLATE WILL BE REQUIRED.
3. SAW-CUTTING AND REMOVAL OF PAVEMENT FOR JOINT INSTALLATION TO BE INCLUDED FOR PAYMENT UNDER THE ITEM "ASPHALTIC PLUG EXPANSION JOINT SYSTEM".
4. CLOSED CELL BACKER ROD DIAMETER SHALL BE DETERMINED AFTER MEASURING THE JOINT OPENING. THE ROD SHALL BE 25% LARGER THAN THE JOINT OPENING.
5. ASPHALTIC PLUG EXPANSION JOINT SYSTEMS MAY BE INSTALLED ONLY WITHIN THE TEMPERATURE RANGE SPECIFIED IN THE SPECIAL PROVISION "ASPHALTIC PLUG EXPANSION JOINT SYSTEM". REFERENCE THE RANGE OF THERMAL MOVEMENT FOR THE SELECTED JOINT PRODUCT IN THE TABLE FOR "INSTALLATION RESTRICTIONS" IN THE SPECIAL PROVISION.

TABLE A - DECK JOINT WIDTH

TEMP (° F)	40	50	60	70	80
N. ABUT.	$\frac{15}{16}$"	1"	$1\frac{1}{16}$"	$1\frac{1}{8}$"	$1\frac{3}{16}$"

SOUTH ABUTMENT DECK JOINT WIDTH SHALL BE 1".

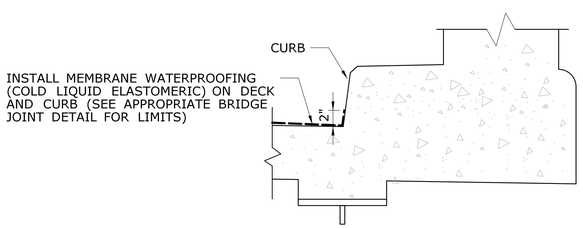

SECTION AT GUTTERLINE AT PAVEMENT CUT OUT
N.T.S.

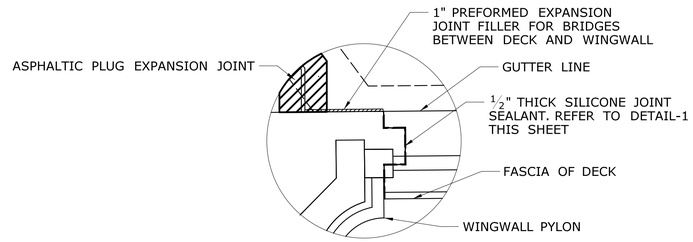

PLAN VIEW
JOINT TREATMENT AT PARAPET (1 / -)
SCALE: $\frac{3}{8}$" = 1'-0"

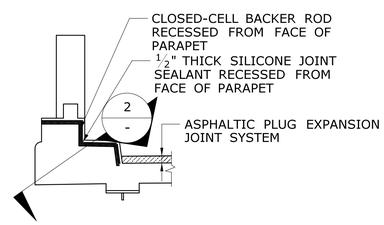

JOINT TREATMENT AT PARAPET
NOT TO SCALE

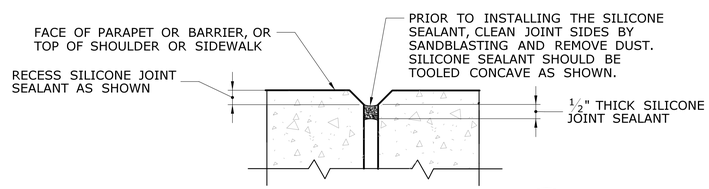

SECTION THROUGH PARAPET (2 / -)
NOT TO SCALE

SILICONE JOINT SEALANT AND BACKER ROD DETAILS AT ASPHALTIC PLUG EXPANSION JOINT

NOTE:
PRIOR TO INSTALLING THE NEW BACKER ROD AND SILICONE JOINT SEALANT, CLEAN JOINT SIDES BY SANDBLASTING. DUST SHALL BE REMOVED BY THE METHOD APPROVED BY THE ENGINEER. THIS WORK WILL BE PAID FOR UNDER THE ITEM "ASPHALTIC PLUG EXPANSION JOINT SYSTEM".

SEQUENCE OF WORK

STEP 1: INSTALL MEMBRANE TO THE TOP OF DECK AND APPROACH SLAB WITHIN THE LIMITS SHOWN. MEMBRANE IS TO STOP 9" BEFORE CENTERLINE OF JOINT. INSTALL BOND BREAKER BEFORE PAVING TO THE LIMITS OF NEW ASPHALTIC PLUG JOINT. INSTALL TEMPORARY BACKER ROD FLUSH WITH BRIDGE DECK AND APPROACH SLAB.

STEP 2: PAVE THE ROADWAY AND BRIDGE.

STEP 3: CUT PAVEMENT FULL DEPTH 10" EACH SIDE OF CENTER OF JOINT AND REMOVE ALL PAVEMENT MATERIAL BETWEEN SAW CUTS.

STEP 4: PLACE CRACK SEALANT ON VERTICAL EDGE OF PAVEMENT ALONG SAW CUT LINES AND INSTALL PROPOSED ASPHALTIC PLUG EXPANSION JOINT SYSTEM.

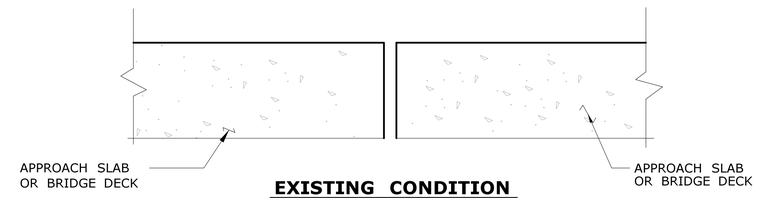

EXISTING CONDITION
SCALE: 1" = 1'-0"

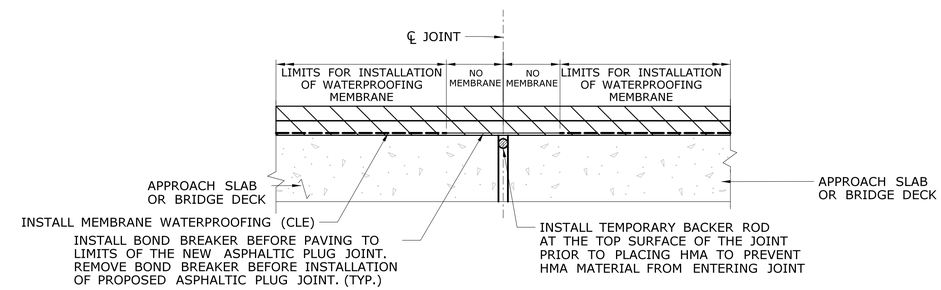

INTERMEDIATE CONDITION
PLACEMENT OF PAVEMENT (STEPS 1-2)
SCALE: 1" = 1'-0"

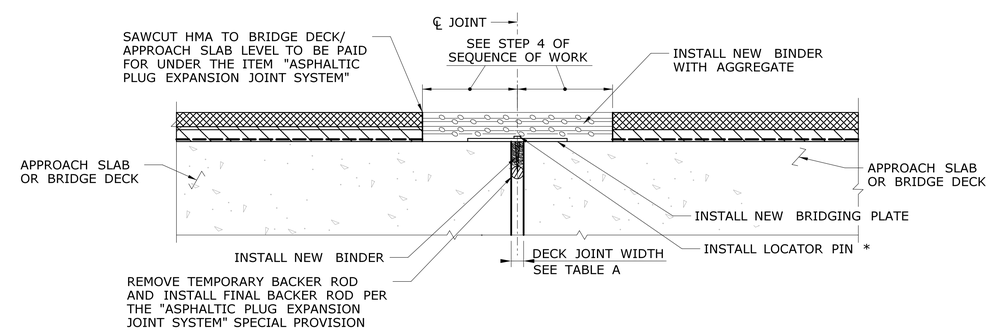

FINAL CONDITION (STEPS 3 & 4)
SCALE: $1\frac{1}{2}$" = 1'-0"

PROPOSED ASPHALTIC PLUG EXPANSION JOINT SYSTEM WITH BRIDGING PLATE (3 / -)
SCALE AS NOTED

REV.	DATE	REVISION DESCRIPTION	SHEET NO.

THE INFORMATION, INCLUDING ESTIMATED QUANTITIES OF WORK, SHOWN ON THESE SHEETS IS BASED ON LIMITED INVESTIGATIONS BY THE STATE AND IS IN NO WAY WARRANTED TO INDICATE THE CONDITIONS OF ACTUAL QUANTITIES OF WORK WHICH WILL BE REQUIRED.

Plotted Date: 7/18/2017

DESIGNER/DRAFTER: JWP
CHECKED BY: SAB
SCALE AS NOTED

STATE OF CONNECTICUT
DEPARTMENT OF TRANSPORTATION

Filename: ...\0102-0356_S-23_APJ.dgn

SIGNATURE/ BLOCK:
OFFICE OF ENGINEERING
APPROVED BY:

PROJECT TITLE:
REHABILITATION OF BRIDGE NO. 00722
WEST ROCKS RD. OVER ROUTE 15

TOWN: NORWALK

DRAWING TITLE: ASPHALTIC PLUG JOINT DETAILS

PROJECT NO. 0102-0356
DRAWING NO. S-23
SHEET NO. 04.23

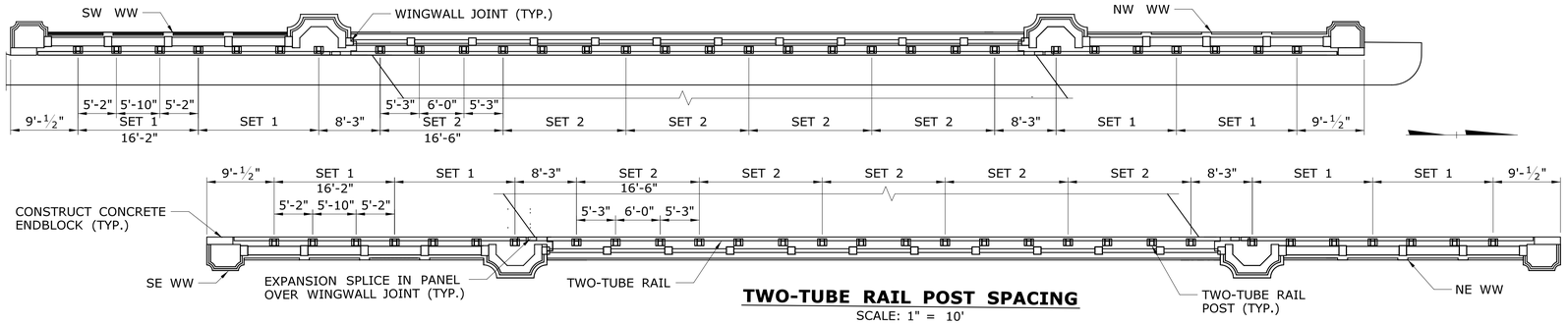

TWO-TUBE RAIL POST SPACING

SCALE: 1" = 10'

NOTES:

1) THE STRUCTURAL-TUBE RAILING SHALL BE MADE FROM STRUCTURAL STEEL TUBING IN ACCORDANCE WITH ASTM A500 GRADE B OR ASTM A501.

2) THE POSTS AND ANCHOR PLATES SHALL BE MADE FROM STRUCTURAL STEEL IN ACCORDANCE WITH ASTM A709 GRADE 36.

3) THE STRUCTURAL-TUBE RAILING, POSTS, AND ANCHOR PLATES SHALL BE HOT-DIP GALVANIZED IN ACCORDANCE WITH ASTM A123.

4) RAIL POST ANCHOR BOLTS SHALL CONFORM TO THE REQUIREMENTS OF ASTM A325 120 KSI MINIMUM TENSILE STRENGTH. NUTS SHALL CONFORM TO THE REQUIREMENTS OF ASTM A563 GRADE B, HEX. WASHERS SHALL CONFORM TO THE REQUIREMENTS OF ASTM F436.

5) OTHER BOLTS SHALL CONFORM TO THE REQUIREMENTS OF ASTM A307. NUTS SHALL CONFORM TO THE REQUIREMENTS OF ASTM A563 GRADE B, HEX. WASHERS SHALL CONFORM TO THE REQUIREMENTS OF ASTM F436.

6) ANCHOR BOLTS, OTHER BOLTS, NUTS, AND WASHERS SHALL BE HOT-DIP GALVANIZED TO THE REQUIREMENTS OF ASTM A153.

7) ENSURE THE EXPANSION SPLICE IS LOCATED IN THE RAILING PANEL WHICH PASSES OVER THE BRIDGE EXPANSION JOINT AS INDICATED ON THE PLAN.

8) SLOTS MAY BE OMITTED IN STANDARD SLEEVES WHERE BOLTS ARE REQUIRED ON ONE SIDE OF SPLICE ONLY.

9) ANCHOR BOLTS MAY BE TACK WELDED TO ANCHORAGE ONLY BEFORE GALVANIZING.

10) AT POST LOCATIONS, DRILL TWO $1\frac{1}{16}$" DIA. HOLES IN THE RAILS TO RECEIVE RAIL BOLTS (SHOP OR FIELD). SEE POST DETAILS FOR HOLE SPACING.

11) BEFORE INSTALLING RAILS, PAINT CUT, DRILLED, OR OTHERWISE DAMAGED SURFACE AREAS OF THE RAILING COMPONENTS WITH TWO COATS OF ZINC RICH PAINT CONFORMING TO THE REQUIREMENTS OF ASTM A780.

12) AFTER INSTALLING THE RAILS, PAINT EXPOSED BOLT THREADS WITH TWO COATS OF ZINC RICH PAINT CONFORMING TO THE REQUIREMENTS OF ASTM A780.

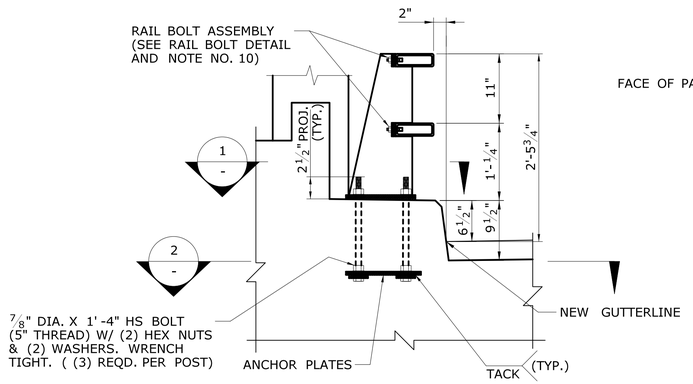

TYPICAL ASSEMBLY DETAIL

SCALE: 1" = 1'- 0"

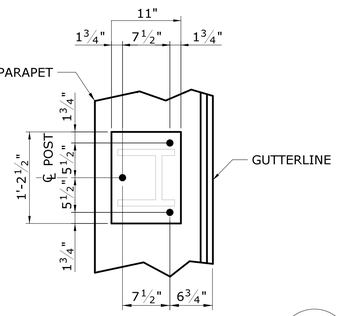

PLAN

(ANCHOR BOLTS, RAILS, AND RAIL BOLTS NOT SHOWN)
SCALE 1" = 1'-0"

1 / -

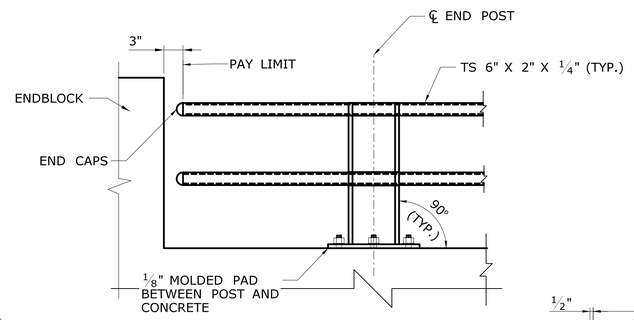

NOTE: CONCRETE RAIL NOT SHOWN FOR CLARITY

ELEVATION AT RAIL TERMINATION

NOT TO SCALE

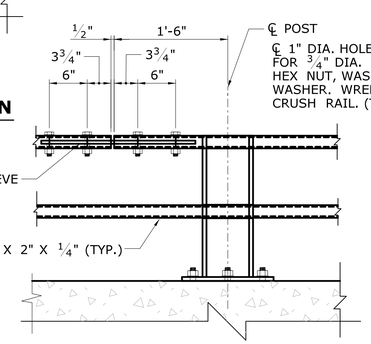

DOUBLE-BOLTED SPLICE

(TOP OR BOTTOM RAIL)
SCALE 1" = 1'-0"

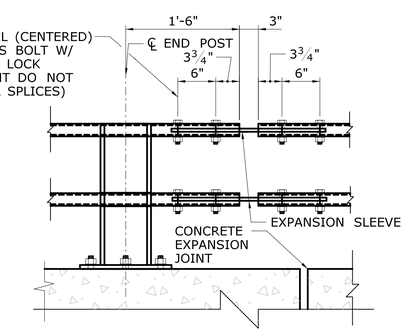

EXPANSION SPLICE

(TOP AND BOTTOM RAIL)
SCALE 1" = 1'-0"

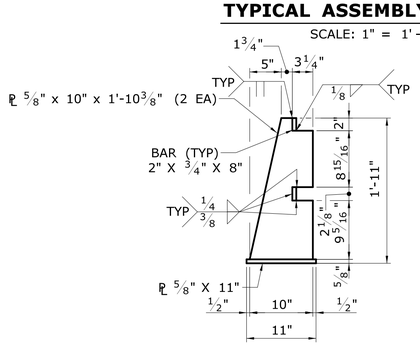

SIDE VIEW

SCALE: 1" = 1'-0"

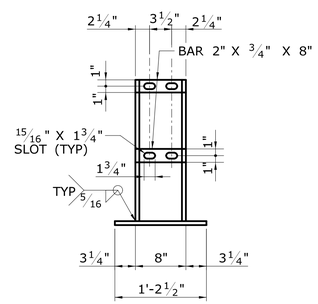

FRONT VIEW

SCALE: 1" = 1'-0"

3 / -

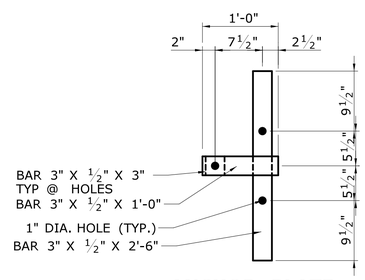

ANCHOR PLATE

SCALE: 1" = 1'-0"

2 / -

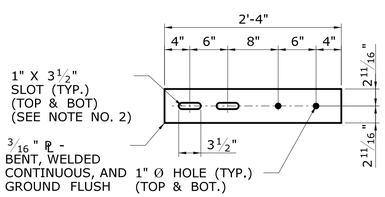

SPLICE SLEEVE

SCALE 1" = 1'-0"

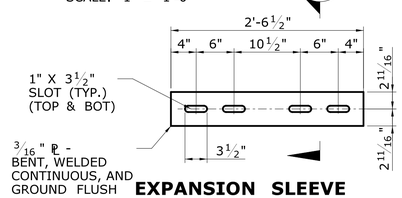

EXPANSION SLEEVE

SCALE 1" = 1'-0"

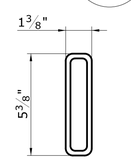

SLEEVE SECTION (END VIEW)

SCALE 3" = 1'-0"

3 / -

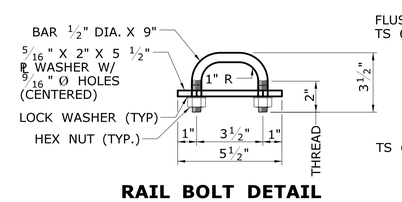

RAIL BOLT DETAIL

SCALE: 3" = 1'-0"

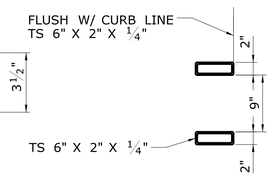

RAIL SECTION

SCALE: 1" = 1'-0"

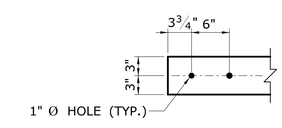

PLAN: TYPICAL RAIL END DETAIL

SCALE: 1" = 1'-0"

REV.	DATE	REVISION DESCRIPTION	SHEET NO.

THE INFORMATION, INCLUDING ESTIMATED QUANTITIES OF WORK, SHOWN ON THESE SHEETS IS BASED ON LIMITED INVESTIGATIONS BY THE STATE AND IS IN NO WAY WARRANTED TO INDICATE THE CONDITIONS OF ACTUAL QUANTITIES OF WORK WHICH WILL BE REQUIRED.

Plotted Date: 7/18/2017

DESIGNER/DRAFTER: JWP
CHECKED BY: SAB
SCALE AS NOTED

STATE OF CONNECTICUT
DEPARTMENT OF TRANSPORTATION

Filename: ...\0102-0356_S-24_Two Tube Retrofit Bridge Railing Details.dgn

SIGNATURE/BLOCK: OFFICE OF ENGINEERING
APPROVED BY:

PROJECT TITLE: REHABILITATION OF BRIDGE NO.00722 WEST ROCKS RD. OVER ROUTE 15

TOWN: NORWALK

DRAWING TITLE: TWO-TUBE BRIDGE RAILING DETAILS

PROJECT NO. 0102-0356
DRAWING NO. S-24
SHEET NO. 04.24

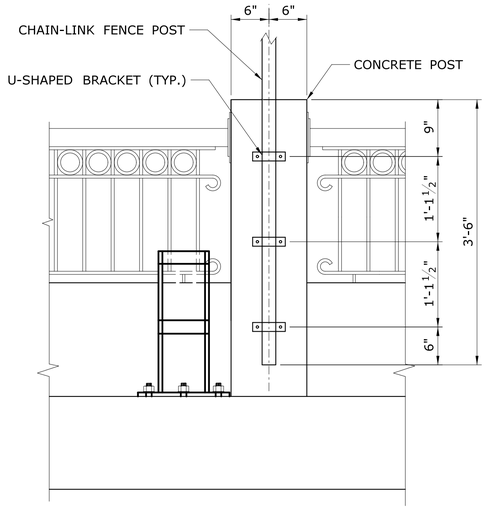

NOTE: CHAIN-LINK MESH NOT SHOWN FOR CLARITY.

8 FT HIGH CHAIN-LINK FENCE POST TYPICAL ATTACHMENT ELEVATION

SCALE: 1" = 1'-0"

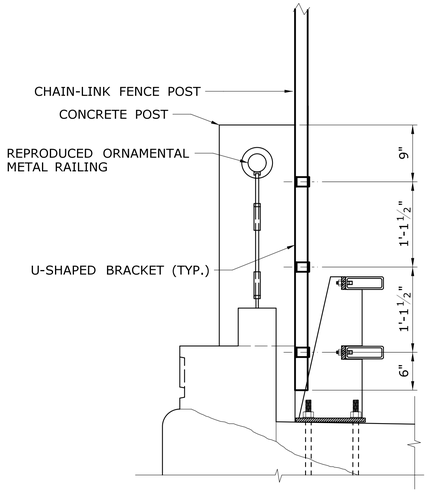

8 FT HIGH CHAIN-LINK FENCE POST TYPICAL ATTACHMENT SECTION

SCALE: 1" = 1'-0"

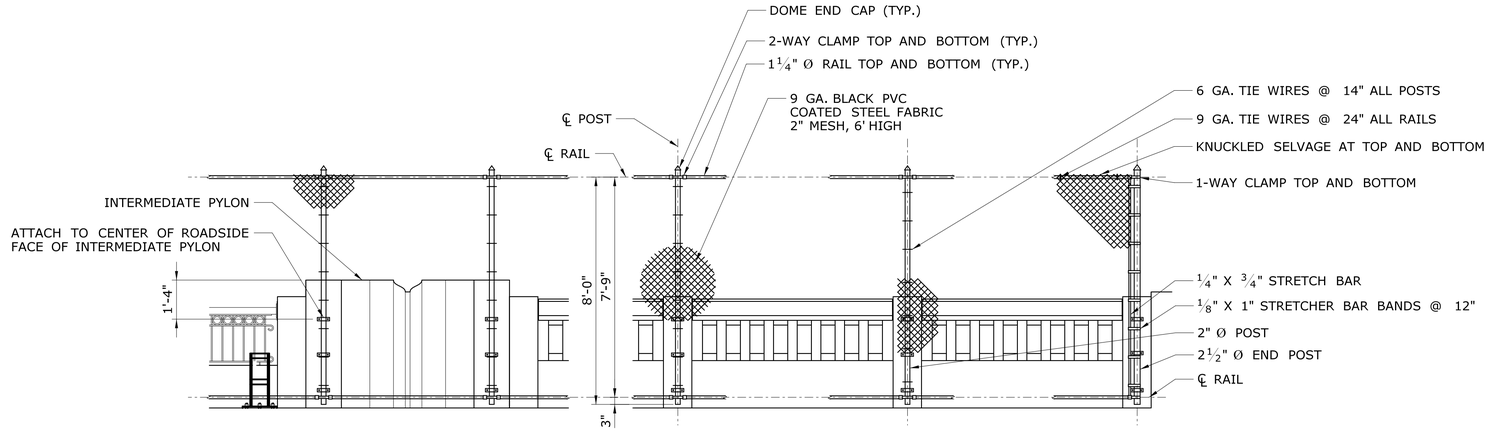

DETAILS - CHAIN-LINK FENCE (2 / -)

SCALE: ⅜" = 1'-0"

CHAIN-LINK FENCE NOTES:

1. A CHAIN LINK FENCE POST SHALL BE CONNECTED TO EACH CONCRETE RAILING POST FOR THE LENGTH OF THE BRIDGE EXCEPT FOR THOSE DIRECTLY ADJACENT TO AN INTERMEDIATE PYLON.
2. THE CHAIN LINK FABRIC SHALL BE MADE OF BLACK POLYVINYL CHLORIDE (PVC) COATED STEEL CHAIN LINK TYPE, WHICH SHALL BE GALVANIZED PRIOR TO PVC COATING AND CONFORM TO THE SPECIFICATIONS OF ASTM F688, CLASS 2B. IT SHALL HAVE A 2" MESH WITH A KNUCKLED SELVAGE AT BOTH TOP AND BOTTOM OF THE FABRIC. THE COLOR OF THE POSTS, RAILS AND FITTINGS SHALL BE BLACK.
3. ALL POSTS AND RAILS SHALL MEET THE GENERAL REQUIREMENTS OF ASTM A53 TYPE E OR S GRADE B, GALVANIZED STEEL.
4. WELDING SHALL CONFORM TO THE REQUIREMENTS OF SUBARTICLE 6.03.03-3(C).
5. BOLTS SHALL CONFORM TO THE REQUIREMENTS OF ASTM A307, GRADE C. THE WASHERS SHALL BE STANDARD, CIRCULAR PLAIN WASHERS CONFORMING TO THE REQUIREMENTS OF ASTM F844.
6. THE PRESET ANCHORAGE WIRE STRUTS SHALL BE COLD-DRAWN AND CONFORM TO ASTM A510, GRADE 1030. THE FERULES SHALL CONFORM TO ASTM A108, GRADE 12 L.
7. ALL FENCE COMPONENTS, INCLUDING POSTS, RAILS, FITTINGS, ANCHORAGES AND FASTENERS SHALL BE HOT-DIP GALVANIZED AFTER FABRICATION AND PVC COATED BLACK.
8. THE ANCHORAGE ASSEMBLIES SHALL BE INSTALLED PERPENDICULAR TO THE GRADE OF THE PARAPET.
9. ALL POSTS SHALL BE INSTALLED VERTICALLY.
10. ALL RAILS SHALL BE INSTALLED PARALLEL TO THE TOP OF PARAPET.
11. THE FABRICATION AND INSTALLATION OF THE PROTECTIVE FENCE SHALL BE PAID FOR UNDER THE ITEM "8' CHAIN-LINK FENCE".
12. SLOPE OF THE CHAIN-LINK FENCE AT THE TERMINATION SHALL BE A MAXIMUM OF 2.5 TO 1 AND SHALL BE CONSISTENT TO THE FULL HEIGHT OF THE FENCE.
13. EXPANSION SLEEVES REQUIRED FOR EACH EXPANSION POST.
14. ALL MEASUREMENTS SHALL BE FIELD VERIFIED PRIOR TO FABRICATION OF ALL CHAIN-LINK FENCE TO ENSURE PROPER FIT AND ALIGNMENT.

REV.	DATE	REVISION DESCRIPTION	SHEET NO.

THE INFORMATION, INCLUDING ESTIMATED QUANTITIES OF WORK, SHOWN ON THESE SHEETS IS BASED ON LIMITED INVESTIGATIONS BY THE STATE AND IS IN NO WAY WARRANTED TO INDICATE THE CONDITIONS OF ACTUAL QUANTITIES OF WORK WHICH WILL BE REQUIRED.

Plotted Date: 7/18/2017

DESIGNER/DRAFTER: JWP
CHECKED BY: SAB
SCALE AS NOTED

STATE OF CONNECTICUT
DEPARTMENT OF TRANSPORTATION

Filename: ...\0102-0356_S-25_ChainLinkFence.dgn

SIGNATURE/BLOCK: OFFICE OF ENGINEERING
APPROVED BY: Mary E. Beck

PROJECT TITLE: REHABILITATION OF BRIDGE NO. 00722 WEST ROCKS RD. OVER ROUTE 15

TOWN: NORWALK

DRAWING TITLE: CHAIN LINK FENCE DETAILS

PROJECT NO. 0102-0356
DRAWING NO. S-25
SHEET NO. 04.25