03 - HIGHWAY
INDEX OF DRAWINGS

DRAWING NUMBER	DRAWING TITLE	DRAWING NUMBER	DRAWING TITLE
HWY-01	COVER SHEET		
HWY-02	TYPICAL SECTIONS		
HWY-03 TO HWY-09	MISCELLANEOUS DETAILS		
HWY-10	ALIGNMENT PLAN		
HWY-11	HIGHWAY PLAN		
HWY-12 TO HWY-13	STAGING PLANS		
HWY-14 TO HWY-19	CROSS-SECTIONS		

THE DESIGN APPEARS TO CONFORM TO APPLICABLE CRITERIA. APPROVAL IS NOT TO BE CONSTRUED TO MEAN THAT ALL ASPECTS OF THE DESIGN HAVE BEEN PERSONALLY CHECKED BY THE UNDERSIGNED.

Michael N. Calabrese, P.E.
2017.08.14 11:33:57-04'00'

TRANSPORTATION PRINCIPAL ENGINEER

REV.	DATE	REVISION DESCRIPTION	SHEET NO.

THE INFORMATION, INCLUDING ESTIMATED QUANTITIES OF WORK, SHOWN ON THESE SHEETS IS BASED ON LIMITED INVESTIGATIONS BY THE STATE AND IS IN NO WAY WARRANTED TO INDICATE THE CONDITIONS OF ACTUAL QUANTITIES OF WORK WHICH WILL BE REQUIRED.

Plotted Date: 7/12/2017

DESIGNER/DRAFTER: HAR

CHECKED BY: MSC

STATE OF CONNECTICUT
DEPARTMENT OF TRANSPORTATION

Filename: ...\HW_MSH_0102_0356_TSH.dgn

SIGNATURE/ BLOCK:

OFFICE OF ENGINEERING

APPROVED BY:

PROJECT TITLE:

REHABILITATION OF BRIDGE NO. 00722
WEST ROCKS RD. OVER ROUTE 15

TOWN: NORWALK

DRAWING TITLE: HIGHWAY COVER SHEET

PROJECT NO. 0102-0356

DRAWING NO. HWY-01

SHEET NO. 03.01

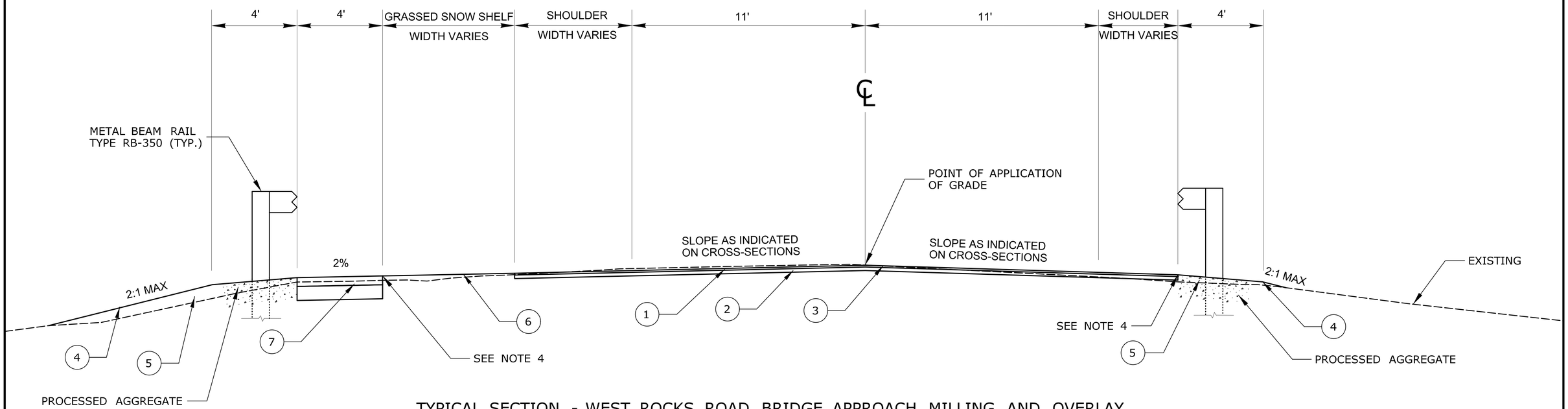

TYPICAL SECTION - WEST ROCKS ROAD BRIDGE APPROACH MILLING AND OVERLAY

NOT TO SCALE

ROADWAY NOTES

1. MILLING AND OVERLAY TO BE PERFORMED FROM STA 50+00 TO THE SOUTH APPROACH SLAB AND FROM STA 54+50 TO THE NORTH APPROACH SLAB.
2. TYPICAL SECTION SHALL BE USED IN CONJUNCTION WITH ROADWAY CROSS-SECTIONS TO DETERMINE PROPER CROSS-SLOPE TRANSITION FROM THE EXISTING CROSS-SLOPE OF THE ROADWAY OUTSIDE THE PROJECT LIMITS TO THE PROPOSED BRIDGE DECK DESIGN CROSS-SLOPE.
3. SEE STRUCTURE DRAWINGS FOR TYPICAL SECTION OF ROADWAY ON BRIDGE.
4. CURBING SHALL BE INSTALLED ON BRIDGE, ALONG SIDEWALK DIRECTLY ABUTTING THE ROADWAY & UNDER GUIDERAIL BRIDGE ATTACHMENTS AS SHOWN ON SHEET NUMBERS 03.07 & 03.08.

LEGEND

1 — 2" HMA S0.5 TRAFFIC LEVEL 3, ON
2 — 1" HMA S0.25 TRAFFIC LEVEL 2
3 — FINE MILLING OF BITUMINOUS CONCRETE (0"-4")
4 — TURF ESTABLISHMENT
5 — FURNISH AND PLACE TOPSOIL
6 — 4" OF TOPSOIL FOR GRASS STRIP (TURF ESTABLISHMENT - LAWN)
7 — CONCRETE SIDEWALK OR BITUMINOUS CONCRETE SIDEWALK

REV.	DATE	REVISION DESCRIPTION	SHEET NO.

THE INFORMATION, INCLUDING ESTIMATED QUANTITIES OF WORK, SHOWN ON THESE SHEETS IS BASED ON LIMITED INVESTIGATIONS BY THE STATE AND IS IN NO WAY WARRANTED TO INDICATE THE CONDITIONS OF ACTUAL QUANTITIES OF WORK WHICH WILL BE REQUIRED.

Plotted Date: 7/12/2017

DESIGNER/DRAFTER: WJG
CHECKED BY: MSC

STATE OF CONNECTICUT
DEPARTMENT OF TRANSPORTATION

Filename: ...\HW_MSH_0102_0356_TYP-01.dgn

SIGNATURE/BLOCK:
OFFICE OF ENGINEERING
APPROVED BY:

PROJECT TITLE:
REHABILITATION OF BRIDGE NO. 00722
WEST ROCKS RD. OVER ROUTE 15

TOWN: NORWALK

DRAWING TITLE: WEST ROCKS RD. TYPICAL SECTION

PROJECT NO. 0102-0356
DRAWING NO. HWY-02
SHEET NO. 03.02

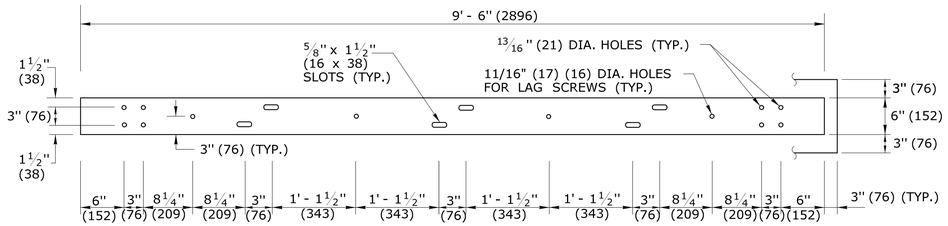

(REAR VIEW)
STANDARD STEEL RAIL DETAIL
6" x 3/8" x 9'-6"
(152x9x2896)

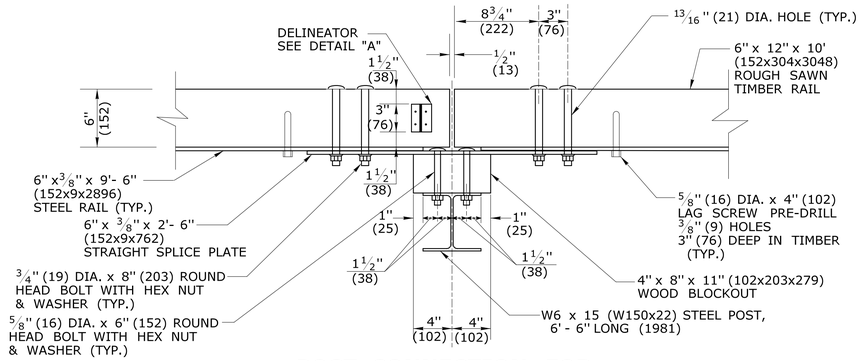

POST CONNECTION FOR STRAIGHT SECTIONS

GENERAL NOTES:

1. MATERIALS AND CONSTRUCTION OF THE MERRITT PARKWAY GUIDERAIL SHALL CONFORM TO SPECIAL PROVISION PROVIDED WITH THE PROJECT.
2. DELINEATORS SHALL BE PLASTIC INVERTED T-SECTIONS IN ACCORDANCE WITH DETAIL "A". REFLECTORS SHALL BE SPACED IN ACCORDANCE WITH TABLE 1 , AND POSITIONED PERPENDICULAR TO THE ADJACENT EDGE OF LANE. DO NOT ATTACH REFLECTORS ON FLARE OR TERMINAL SECTIONS. REFLECTIVE SHEETING SHALL BE SILVER-WHITE ON ALL RAIL SECTIONS ADJACENT TO THE RIGHT SHOULDER, AND YELLOW ON RAIL SECTIONS ADJACENT TO THE LEFT SHOULDER OF TRAVEL LANES. DELINEATORS SHALL BE INCLUDED IN THE COST FOR "MERRITT PARKWAY GUIDERAIL."
3. TWO ADDITIONAL 5/8" (16) DIA. X 4"(102) LONG LAG SCREWS AND WASHERS SHALL BE INSTALLED AT ALL MID-SPAN POINTS FOR STANDARD SYSTEMS.
4. ALL CONNECTION HARDWARE SHALL BE SUFFICENTLY TIGHTENED TO ACCOMODATE FOR SHRINKAGE OF THE WOOD ELEMENTS.
5. WHEN FURNISHING THE SHOP BENT SPLICE PLATES, USE THE MINIMUM BEND ANGLE AS SHOWN IN TABLE 2.
6. FOR RAILING SET ON A CURVE WITH RADII < 70' (21.3m) SPACE POSTS AT 5' (1524).
7. GUIDERAIL HEIGHT MAY VARY UP TO 2" PLUS OR MINUS THE HEIGHT SHOWN IN THE DETAILS TO ACHIEVE A SMOOTH AND CONTINUOUS GUIDERAIL PROFILE.

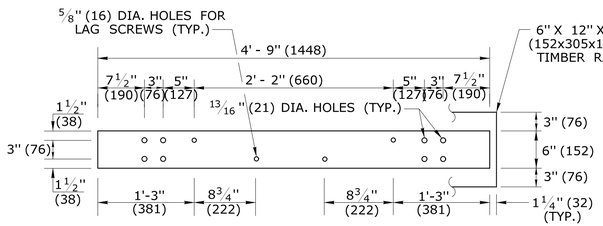

STEEL RAIL DETAIL
6' x 3/8" x 4'-9"
(1829 x 9 x 1448)
FOR CURVES WITH R < 70' (21.3m)

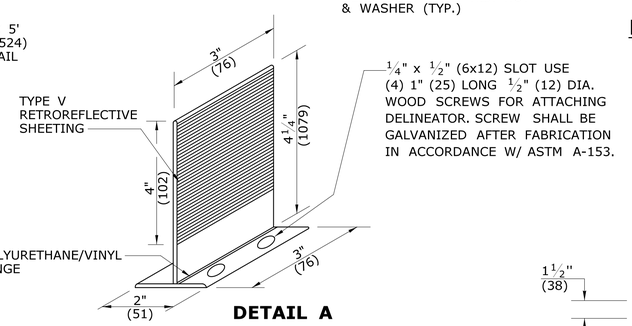

DETAIL A
DELINEATOR

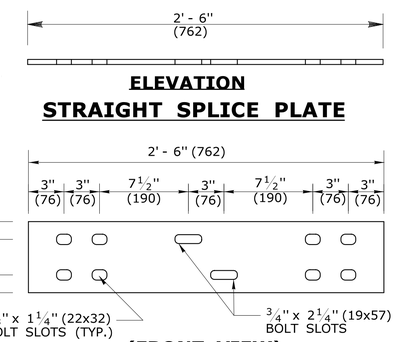

ELEVATION
STRAIGHT SPLICE PLATE

(FRONT VIEW)
STEEL SPLICE PLATE DETAIL
6" x 3/8" x 2'- 6"
(152x9x762)

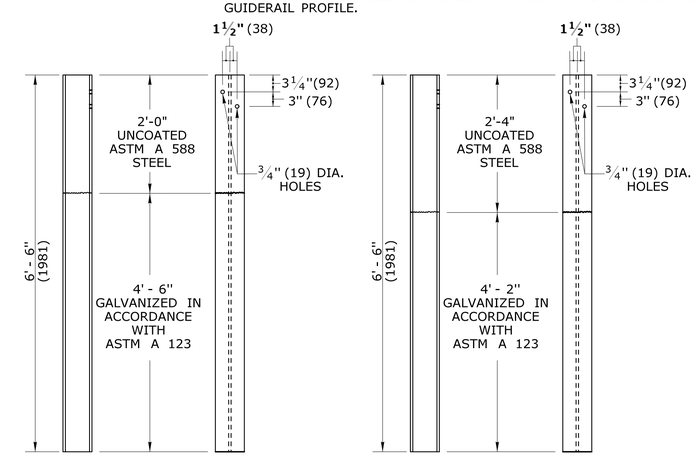

SIDE VIEW FRONT VIEW
POST DETAIL
W6 X 15
(W150x22)
WITH CURBING

SIDE VIEW FRONT VIEW
POST DETAIL
W6 X 15
(W150x22)
NO CURBING

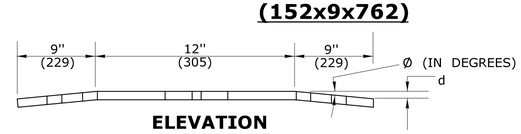

ELEVATION
BENT SPLICE PLATE

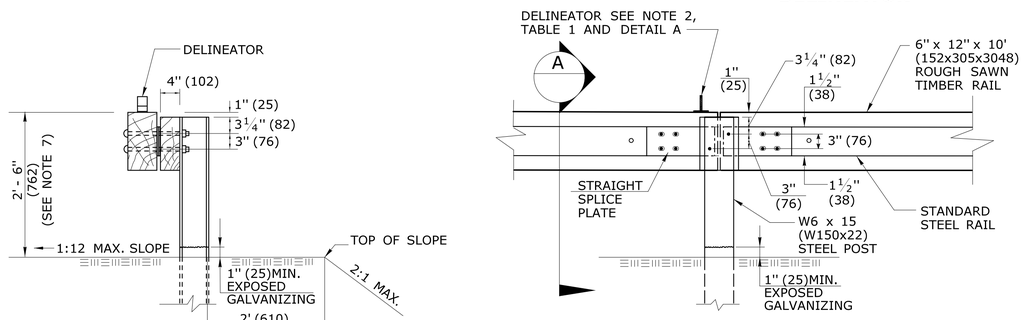

SECTION
(NO CURB)

REAR VIEW ELEVATION
POST CONNECTION

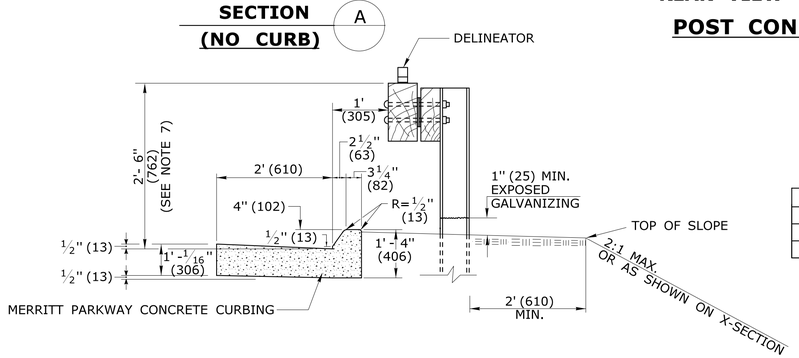

MERRITT PARKWAY CONCRETE CURBING WITH MERRITT PARKWAY GUIDERAIL

TABLE 1

DELINEATOR SPACING	
CURVE RADIUS	SPACE
< 300' (91.4m)	20' (6.10m)
≥ 300' (91.4m)	50' (15.2m)

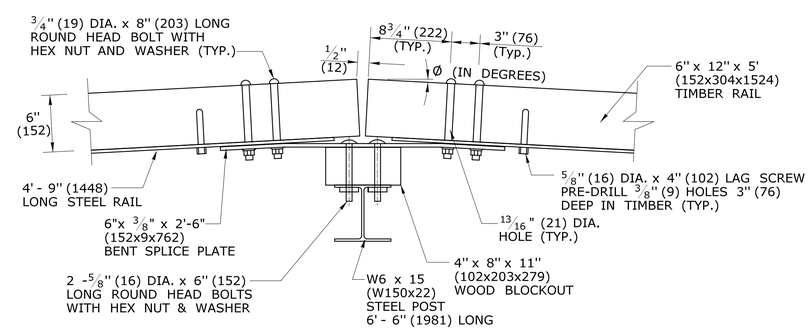

POST CONNECTION
FOR CURVES WITH R < 70' (21.3m)

TABLE 2

Radius R (ft.)(m)	Ø (Degrees)	d (in.)(mm)
35 (10.7)Min.	4.10	5/8(16)
40 (12.2)	3.58	9/16 (14)
45 (13.7)	3.18	1/2(13)
50 (15.2)	2.86	7/16 (11)
55 (16.8)	2.60	7/16 (11)
60 (18.3)	2.40	3/8(9)
65 (19.8)	2.20	3/8(9)
70 (21.3)	2.05	5/16 (8)
Over 70 (21.3)	Flat	0

ALL METRIC DIMENSIONS ARE IN MILLIMETERS (mm) UNLESS OTHERWISE NOTED.

REV.	DATE	REVISION DESCRIPTION	SHEET NO.

THE INFORMATION, INCLUDING ESTIMATED QUANTITIES OF WORK, SHOWN ON THESE SHEETS IS BASED ON LIMITED INVESTIGATIONS BY THE STATE AND IS IN NO WAY WARRANTED TO INDICATE THE CONDITIONS OF ACTUAL QUANTITIES OF WORK WHICH WILL BE REQUIRED.

Plotted Date: 7/11/2017

DESIGNER/DRAFTER: -
CHECKED BY: -
SCALE AS NOTED

STATE OF CONNECTICUT
DEPARTMENT OF TRANSPORTATION

Filename: ...\102-356 - Misc. Merritt Details.dgn

SIGNATURE/BLOCK: OFFICE OF ENGINEERING
APPROVED BY:

PROJECT TITLE: REHABILITATION OF BRIDGE NO. 00722 WEST ROCKS RD. OVER ROUTE 15

TOWN: NORWALK

DRAWING TITLE: MERRITT PARKWAY GUIDERAIL

PROJECT NO. 0102-0356
DRAWING NO. HWY-03
SHEET NO. 03.03

STEEL TRANSITION RAIL
6" x 3/8" x 13'-6" (152x9x4115)
FOR LEADING END ATTACHMENT

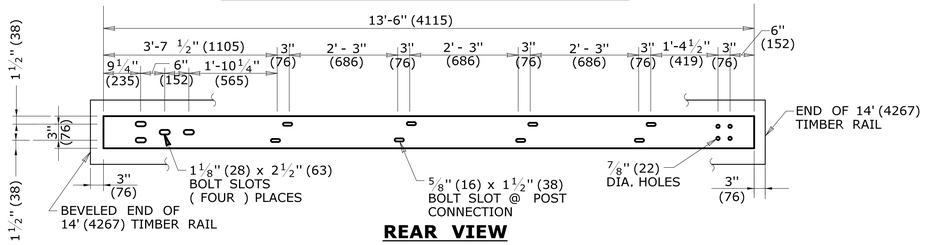

REAR VIEW

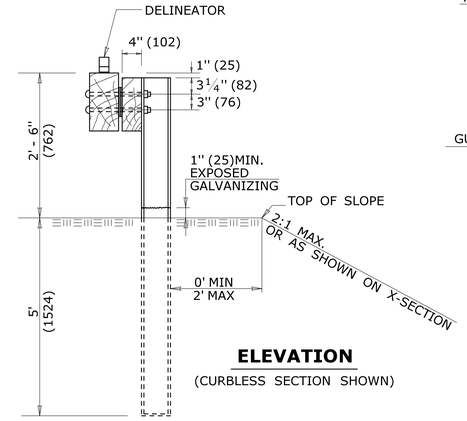

ELEVATION

(CURBLESS SECTION SHOWN)

APPROACH TO FIXED OBJECTS
SYSTEM 2 AND 3

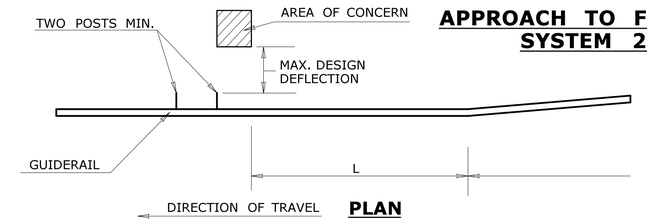

PLAN

Maximum Design Deflection (ft) (mm)	Area Of Concern Plus 2 Posts (see sketch)	SYSTEM 3	SYSTEM 2	Standard System	L
		W6x15 (W150x22) Posts Spaced at 2'- 6" (762)	W6x15 (W150x22) Posts Spaced at 5' (1524)	W6x15 (W150x22) Posts Spaced at 10' (3048)	Min. Length Needed
1' (305)	System 3	10' (3048)	10' (3048)	50' (16.40m)	70' (21.34m)
2' - 6" (762)	System 2	–	10' (3048)	60' (19.68m)	70' (21.34m)
4' (1219)	Standard System	–	–	70' (21.34m)	70' (21.34m)

MERRITT PARKWAY GUIDERAIL DESIGN DEFLECTION CHART

MERRITT PARKWAY GUIDERAIL SYSTEM 2 WITH 7'-6" POSTS

NOTES:

1. MERRITT PARKWAY GUIDERAIL SYSTEM 2 WITH 7'-6" POSTS WILL BE PAID FOR UNDER THE CONTRACT ITEM: "MERRITT PARKWAY GUIDERAIL SYSTEM 2"

DRILLING HOLE FOR GUIDERAIL POST

(SEE GENERAL NOTES 2-3)

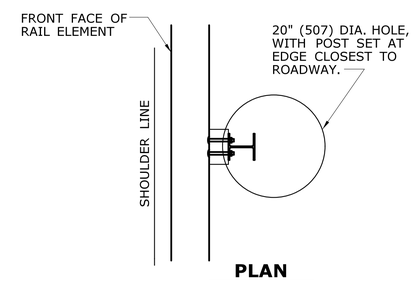

PLAN

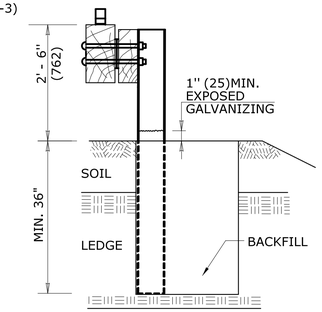

CASE 1

(CURBLESS SECTION SHOWN)

CASE 1: IF LEDGE IS LOCATED WITHIN 36" OF THE FINISHED GRADE AT THE POST LOCATION A 20" DIAMETER HOLE MUST BE DRILLED IN THE LEDGE TO THE MINIMUM EMBEDMENT DEPTH OF 36" AND THE POST MUST BE CUT AND DRIVEN TO ACHIEVE THIS DEPTH.

CASE 2: IF LEDGE IS LOCATED AT A DEPTH GREATER THAN 36" BUT LESS THAN THE FULL EMBEDMENT DEPTH THE POST SHALL BE CUT AND DRIVEN TO ACHIEVE EMBEDMENT TO THE DEPTH OF THE TOP OF LEDGE.

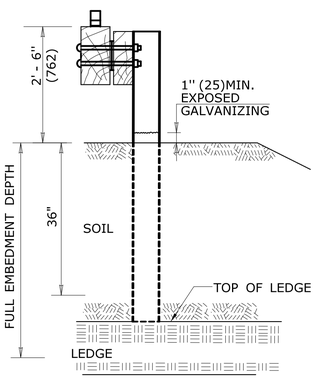

CASE 2

(CURBLESS SECTION SHOWN)

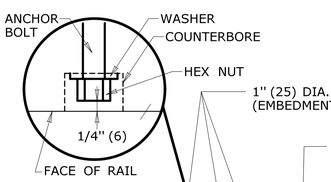

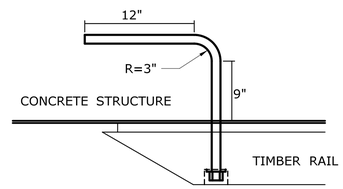

"J" TYPE ANCHOR BOLTS DETAIL

ATTACHMENT AT LEADING END
(VERTICAL SHAPE BARRIER SHOWN)
(FRONT VIEW)

(SEE GENERAL NOTES 1)

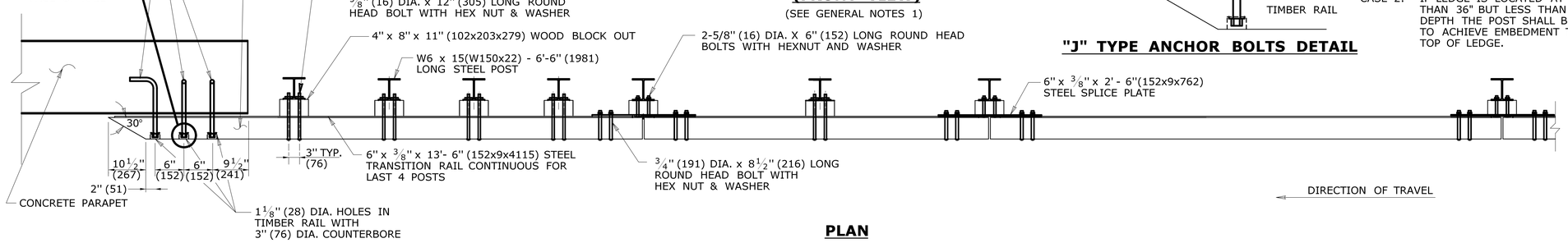

PLAN

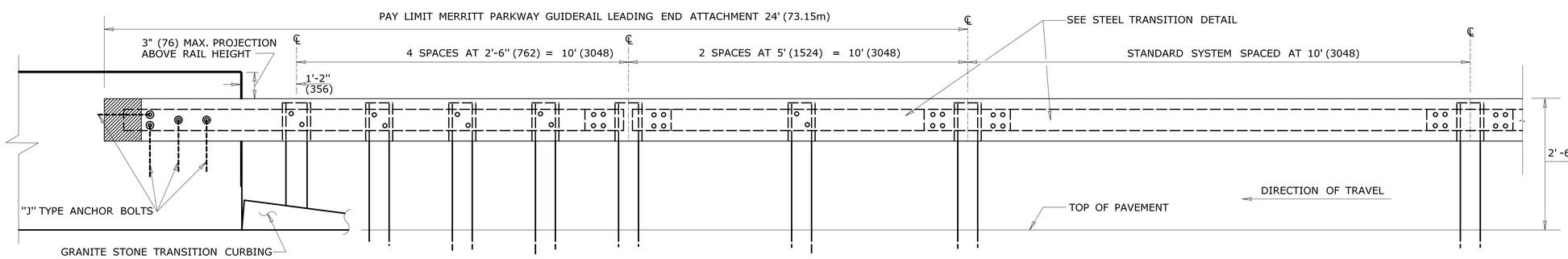

ELEVATION

GENERAL NOTES:

1. THIS DRAWING SHOWS LEADING END ATTACHMENT TO PROPOSED BARRIER/PARAPET. AT EXISTING PARAPETS ATTACH GUIDERAIL USING D.O.T. APPROVED CHEMICAL ANCHORS.
2. PRIOR TO GUIDERAIL POST INSTALLATION THE CONTRACTOR SHALL INVESTIGATE POST LOCATIONS FOR THE PRESENCE AND DEPTH OF LEDGE.
3. 20" (507) DIA. EXCAVATED HOLE SHALL BE BACKFILLED WITH SUITABLE MATERIAL, OR GRANULAR FILL COMPACTED IN 6" (150) LIFTS BEFORE DRIVING POST OR POSTS MAY BE SET IN EXCAVATED HOLE AND BACKFILLED WITH CONTROLLED LOW STRENGTH MATERIAL (CLSM).

REV.	DATE	REVISION DESCRIPTION	SHEET NO.

THE INFORMATION, INCLUDING ESTIMATED QUANTITIES OF WORK, SHOWN ON THESE SHEETS IS BASED ON LIMITED INVESTIGATIONS BY THE STATE AND IS IN NO WAY WARRANTED TO INDICATE THE CONDITIONS OF ACTUAL QUANTITIES OF WORK WHICH WILL BE REQUIRED.

Plotted Date: 7/11/2017

DESIGNER/DRAFTER: -

CHECKED BY: -

SCALE AS NOTED

STATE OF CONNECTICUT
DEPARTMENT OF TRANSPORTATION

Filename: ...\102-356 - Misc. Merritt Details.dgn

SIGNATURE/BLOCK:
OFFICE OF ENGINEERING

APPROVED BY:

PROJECT TITLE:
REHABILITATION OF BRIDGE NO. 00722
WEST ROCKS RD. OVER ROUTE 15

TOWN: NORWALK

DRAWING TITLE:
MERRITT PARKWAY GUIDERAIL

PROJECT NO. 0102-0356

DRAWING NO. HWY-04

SHEET NO. 03.04

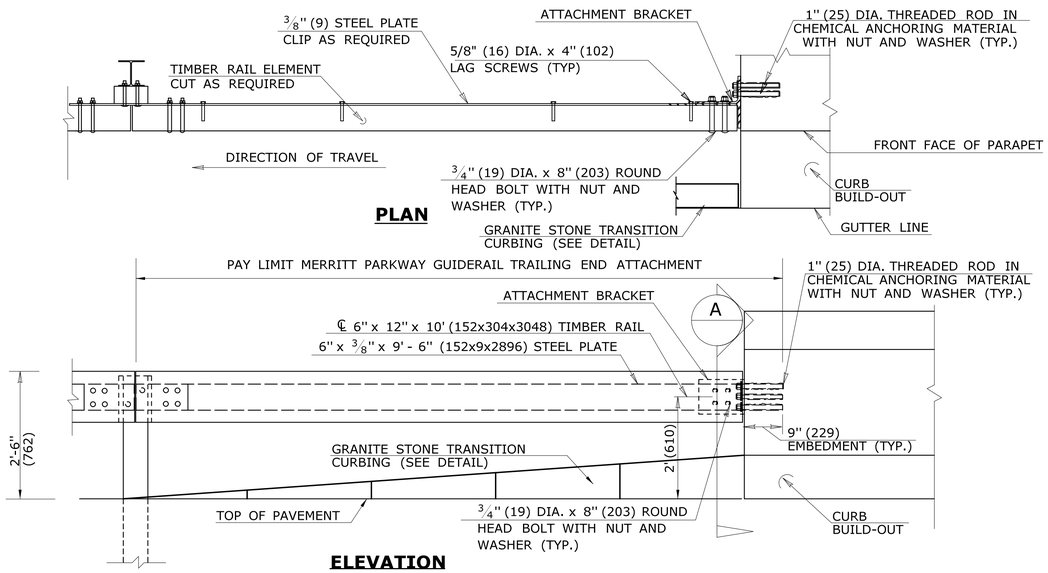

TRAILING END ATTACHMENT AT EXISTING BRIDGE PARAPET WITH CURB BUILD-OUT

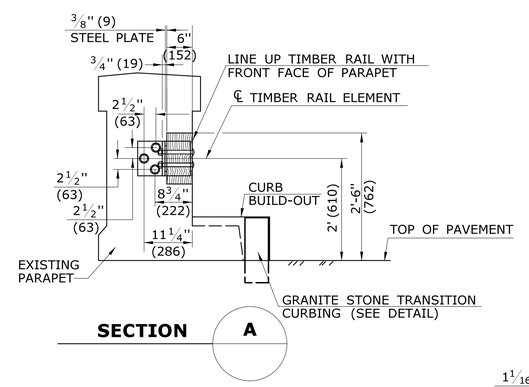

GENERAL NOTES:

1. THREADED RODS SHALL CONFORM TO THE REQUIREMENTS OF ASTM A325, WITH NUTS CONFORMING TO ASTM A563, GRADE C. CIRCULAR HARDENED WASHERS SHALL CONFORM TO ASTM F436. THREADED NUTS AND WASHERS IN CONTACT WITH CONCRETE SHALL BE GALVANIZED IN ACCORDANCE WITH ASTM A153. ROUND HEAD BOLTS SHALL CONFORM TO THE SPECIAL PROVISIONS PROVIDED WITH THE PROJECT.
2. CHEMICAL ANCHORING MATERIAL SHALL CONFORM TO SECTION M.03, SUBARTICLE M.03.01-15
3. ATTACHMENT BRACKETS SHALL CONFORM TO ASTM A36 AND BE GALVANIZED IN ACCORDANCE WITH ASTM A123.
4. THE PAY LIMIT FOR TRAILING END ATTACHMENT INCLUDES ALL HARDWARE AND RAIL ELEMENTS TO AND INCLUDING THE FIRST POST.
5. ALL RUNS OF MERRITT PARKWAY MEDIAN BARRIER SHALL INCLUDE MERRITT PARKWAY MEDIAN BARRIER TRANSITIONS SECTIONS AT BOTH ENDS.
6. THE END OF TIMBER RAIL ATTACHED TO THE ANGLED ATTACHMENT BRACKET FOR THE RIPAWAM RIVER SHALL BE MITERED TO MATCH THE ANGLE OF THE BRACKET AND PARAPET.

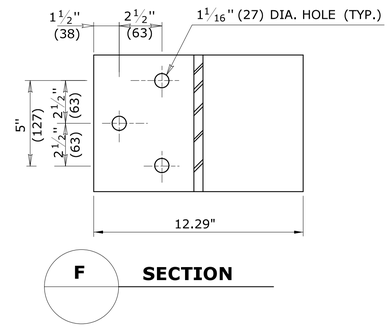

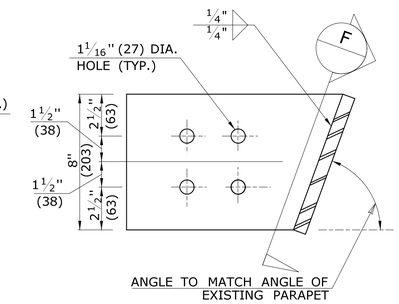

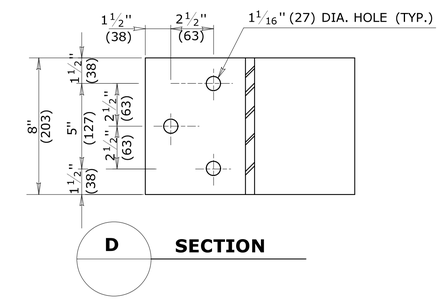

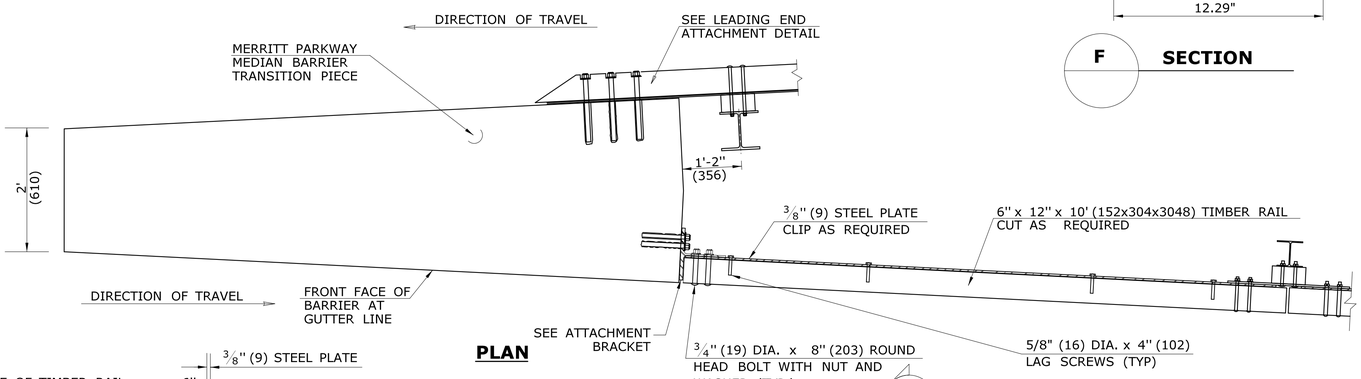

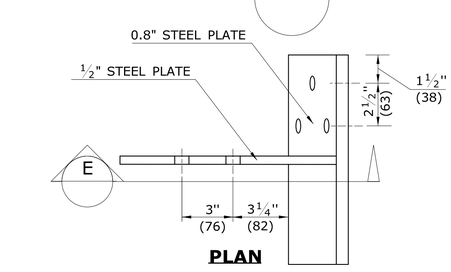

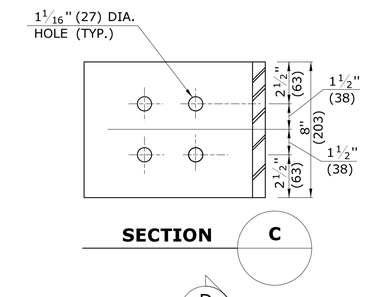

ANGLED ATTACHMENT BRACKET FOR TRAILING END ATTACHMENT AT BRIDGE NO. 0705 (RIPPOWAM RIVER BRIDGE)

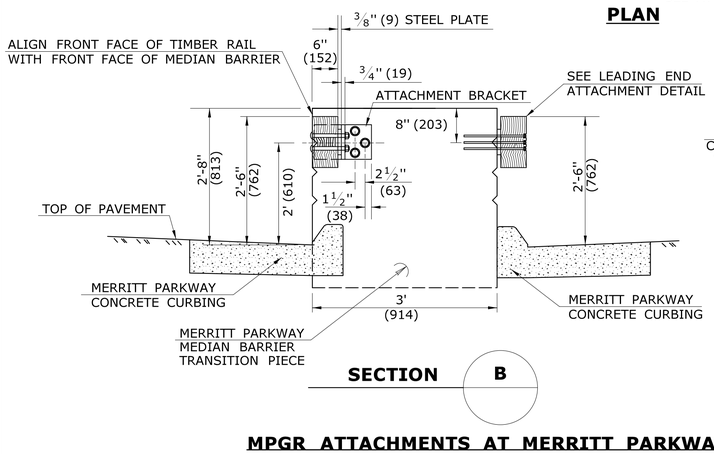

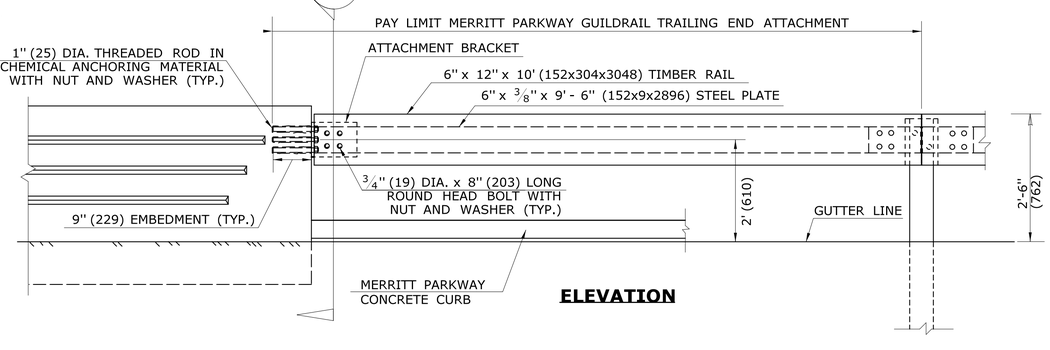

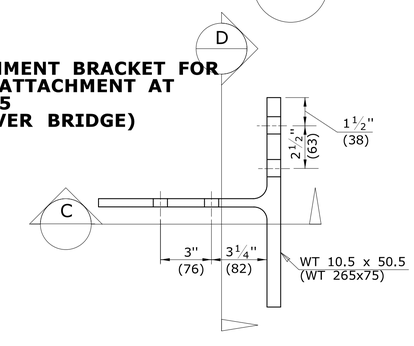

ATTACHMENT BRACKET

MPGR ATTACHMENTS AT MERRITT PARKWAY MEDIAN BARRIER

REV.	DATE	REVISION DESCRIPTION	SHEET NO.

THE INFORMATION, INCLUDING ESTIMATED QUANTITIES OF WORK, SHOWN ON THESE SHEETS IS BASED ON LIMITED INVESTIGATIONS BY THE STATE AND IS IN NO WAY WARRANTED TO INDICATE THE CONDITIONS OF ACTUAL QUANTITIES OF WORK WHICH WILL BE REQUIRED.

Plotted Date: 7/11/2017

DESIGNER/DRAFTER: -
CHECKED BY: -
SCALE AS NOTED

STATE OF CONNECTICUT
DEPARTMENT OF TRANSPORTATION

Filename: ...\102-356 - Misc. Merritt Details.dgn

SIGNATURE/BLOCK:
OFFICE OF ENGINEERING
APPROVED BY:

PROJECT TITLE:
REHABILITATION OF BRIDGE NO. 00722
WEST ROCKS RD. OVER ROUTE 15

TOWN: NORWALK

DRAWING TITLE:
MERRITT PARKWAY GUIDERAIL

PROJECT NO. 0102-0356
DRAWING NO. HWY-05
SHEET NO. 03.05

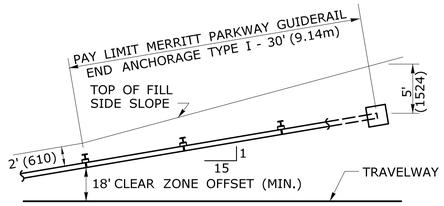

PLAN

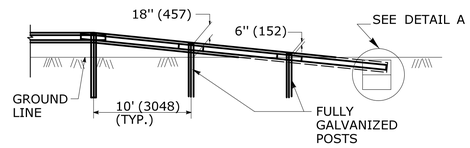

ELEVATION

MERRITT PARKWAY GUIDERAIL END ANCHORAGE TYPE I (BURIED ANCHOR)

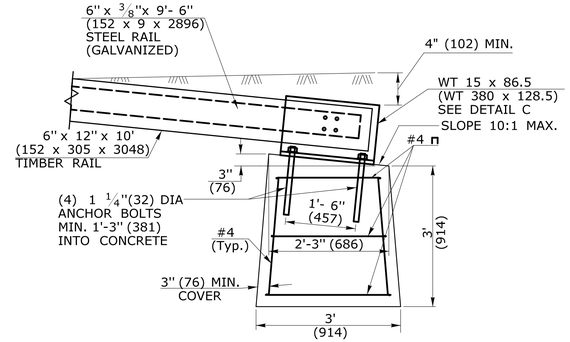

ELEVATION
DETAIL A

GENERAL NOTES:

1. MATERIALS AND CONSTRUCTION OF THE MERRITT PARKWAY GUIDERAIL END ANCHORS SHALL CONFORM TO THE SPECIAL PROVISIONS PROVIDED WITH THE PROJECT. ALL HARDWARE IN CONTACT WITH THE GROUND SHALL BE GALVANIZED IN ACCORDANCE WITH THE SPECIAL PROVISION.
2. FOR THE END ANCHOR TYPE II, EXTEND THE FLARE INTO THE CUT SLOPE UNTIL A MINIMUM 12" (305) OF COVER IS OBTAINED OVER THE GUIDERAIL ELEMENT.
3. TYPE I END ANCHORS SHALL BE INSTALLED OUTSIDE THE CLEAR ZONE. THE CLEAR ZONE FOR THE MERRITT PARKWAY IS 18' AND IS MEASURED FROM THE EDGE OF TRAVEL WAY.
4. BEGIN THE FLARE AT THE NEAREST POST TO A TRANSITION POINT BETWEEN FILL AND CUT AS DIRECTED BY THE ENGINEER.

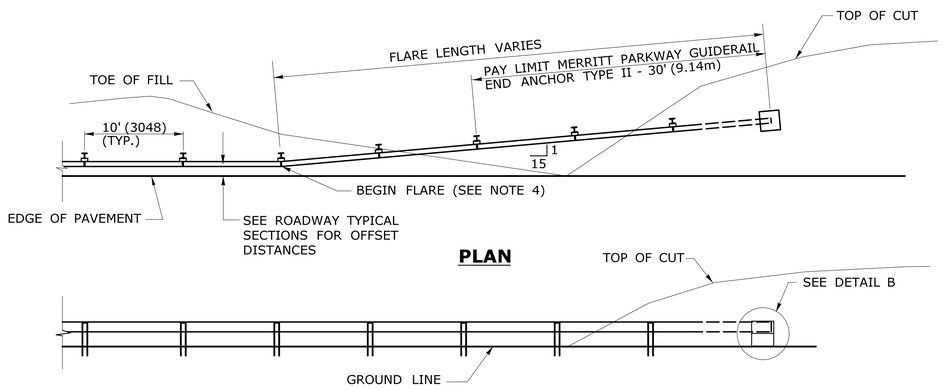

PLAN

ELEVATION

MERRITT PARKWAY GUIDERAIL END ANCHORAGE TYPE II (EARTH CUT SLOPE ANCHOR)

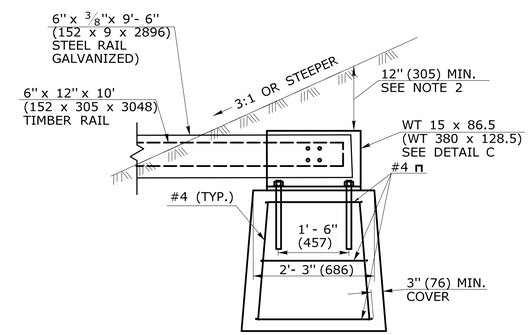

ELEVATION
DETAIL B

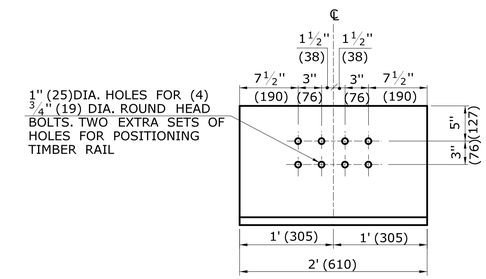

ELEVATION
DETAIL C
WT 15 x 86.5 (GALVANIZED)
(WT 380 X 128.5)

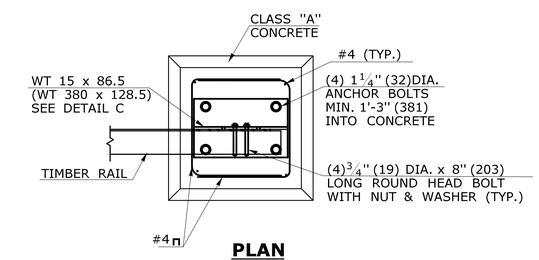

PLAN
DETAIL D

PLAN VIEW FOR
TYPE I & II ANCHOR

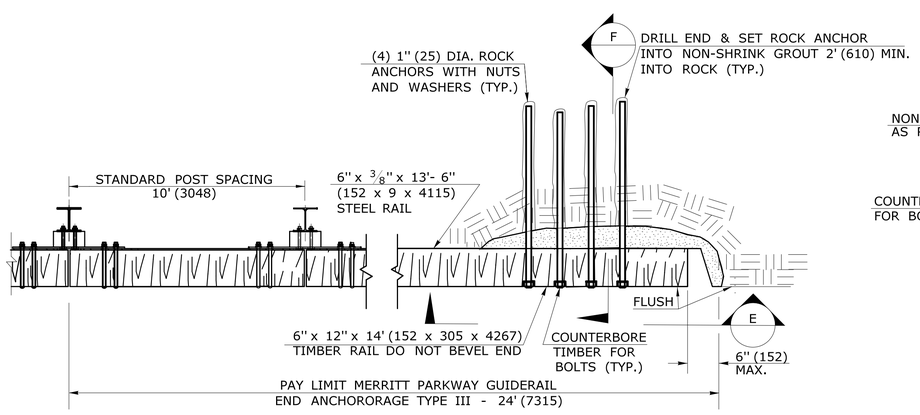

PLAN

MERRITT PARKWAY GUIDERAIL END ANCHORAGE TYPE III (ROCK CUT ANCHOR)

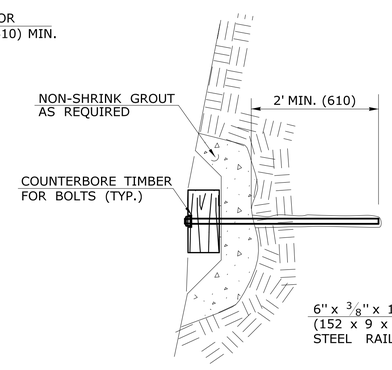

SECTION F

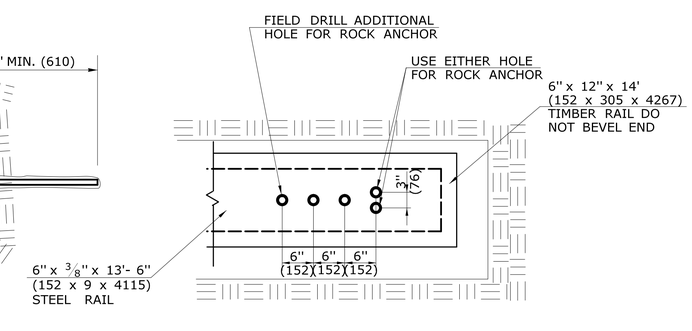

SECTION E

ALL METRIC DIMENSIONS ARE IN MILLIMETERS (mm) UNLESS OTHERWISE NOTED.

REV.	DATE	REVISION DESCRIPTION	SHEET NO.

THE INFORMATION, INCLUDING ESTIMATED QUANTITIES OF WORK, SHOWN ON THESE SHEETS IS BASED ON LIMITED INVESTIGATIONS BY THE STATE AND IS IN NO WAY WARRANTED TO INDICATE THE CONDITIONS OF ACTUAL QUANTITIES OF WORK WHICH WILL BE REQUIRED.

Plotted Date: 7/11/2017

DESIGNER/DRAFTER: -
CHECKED BY: -
SCALE AS NOTED

STATE OF CONNECTICUT
DEPARTMENT OF TRANSPORTATION

Filename: ...\102-356 - Misc. Merritt Details.dgn

SIGNATURE/BLOCK: OFFICE OF ENGINEERING
APPROVED BY:

PROJECT TITLE: REHABILITATION OF BRIDGE NO. 00722 WEST ROCKS RD. OVER ROUTE 15

TOWN: NORWALK

DRAWING TITLE: MERRITT PARKWAY GUIDERAIL

PROJECT NO. 0102-0356
DRAWING NO. HWY-06
SHEET NO. 03.06

GENERAL NOTES:

1. GRANITE STONE TRANSITION CURBING WILL BE INSTALLED AS NOTED ON THE PLANS AND IN ACCORDANCE WITH FORM 816 SECTION 8.13 "STONE CURBING".
2. GRANITE STONE TRANSITION CURBING (INCLUDING DOWEL) WILL BE PAID FOR AT THE CONTRACT UNIT PRICE FOR "GRANITE STONE TRANSITION CURBING".
3. NEW INSTALLATIONS OF THIS CURBING SHALL ONLY BE ALLOWED ON THE MERRITT PARKWAY.
4. GRANITE STONE TRANSITION CURBING SHALL BE INSTALLED TO MATCH THE SLOPE OF SLOPED GRANITE STONE CURBING ON THE BRIDGE. ALL SECTIONS OF THE TRANSITION CURBING SHALL BE 2'-0" (610) LONG.

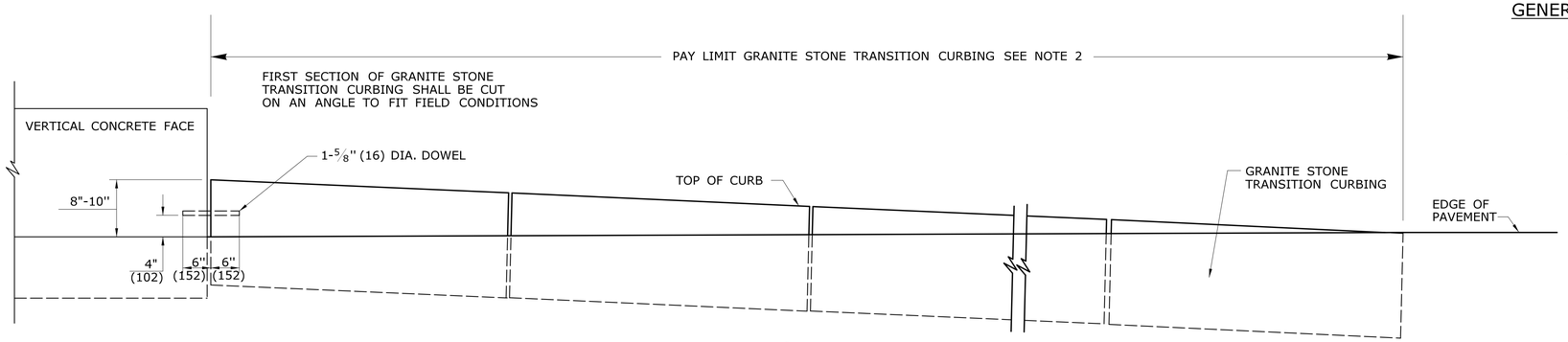

ELEVATION

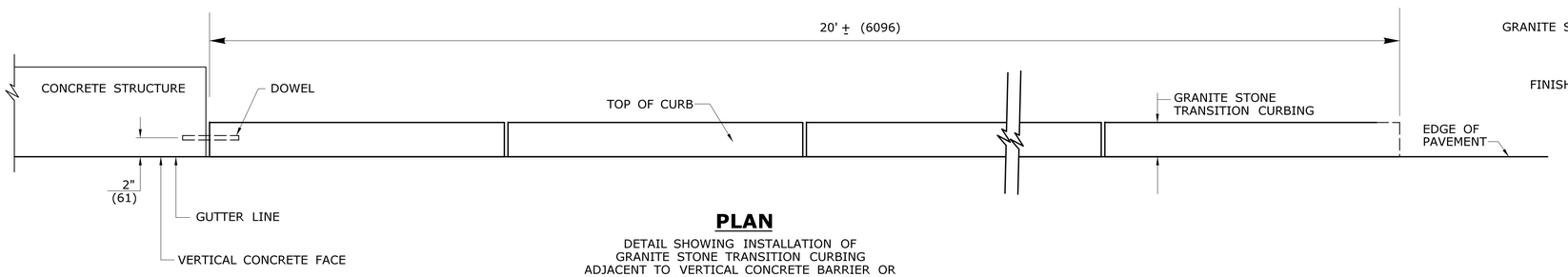

PLAN

DETAIL SHOWING INSTALLATION OF GRANITE STONE TRANSITION CURBING ADJACENT TO VERTICAL CONCRETE BARRIER OR VERTICAL FACE CONCRETE BRIDGE BUILD-OUT WITH NO ADJACENT ROADWAY CURBING

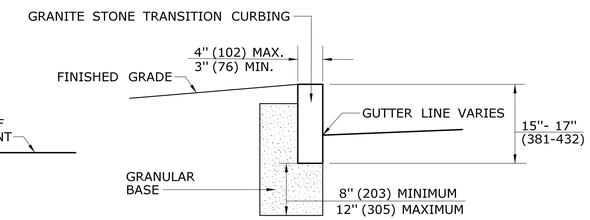

TYPICAL SECTION SHOWING INSTALLATION OF GRANITE STONE TRANSITION CURBING AT VERTICAL FACE

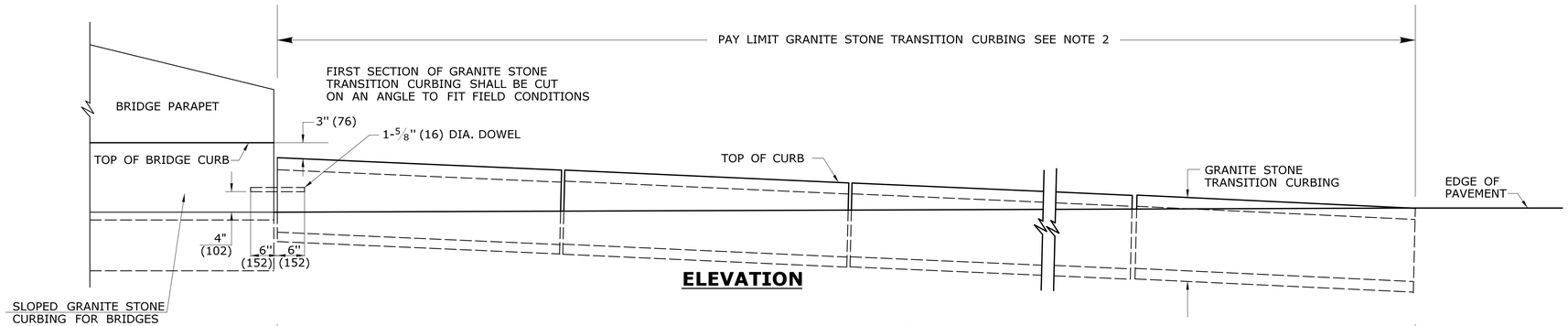

ELEVATION

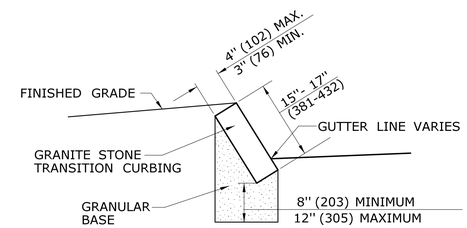

TYPICAL SECTION SHOWING INSTALLATION OF GRANITE STONE TRANSITION CURBING AT SLOPED GRANITE BRIDGE CURBING

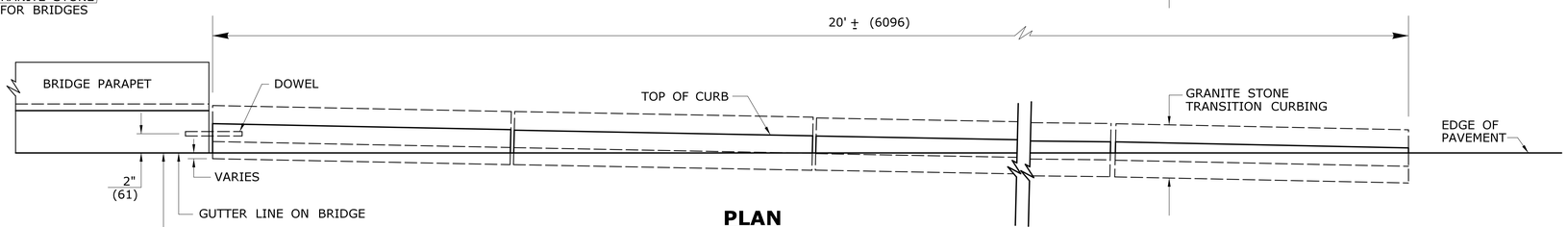

PLAN

DETAIL SHOWING INSTALLATION OF GRANITE STONE TRANSITION CURBING ADJACENT TO BRIDGE CURBING WITH NO ADJACENT ROADWAY CURBING

ALL METRIC DIMENSIONS ARE IN MILLIMETERS (mm) UNLESS OTHERWISE NOTED.

REV.	DATE	REVISION DESCRIPTION	SHEET NO.

THE INFORMATION, INCLUDING ESTIMATED QUANTITIES OF WORK, SHOWN ON THESE SHEETS IS BASED ON LIMITED INVESTIGATIONS BY THE STATE AND IS IN NO WAY WARRANTED TO INDICATE THE CONDITIONS OF ACTUAL QUANTITIES OF WORK WHICH WILL BE REQUIRED.

Plotted Date: 7/11/2017

DESIGNER/DRAFTER: -

CHECKED BY: -

SCALE AS NOTED

STATE OF CONNECTICUT
DEPARTMENT OF TRANSPORTATION

Filename: ...\102-356 - Misc. Merritt Details.dgn

SIGNATURE/BLOCK:
OFFICE OF ENGINEERING

APPROVED BY:

PROJECT TITLE:
REHABILITATION OF BRIDGE NO. 00722
WEST ROCKS RD. OVER ROUTE 15

TOWN: NORWALK

DRAWING TITLE:
GRANITE CURBING TRANSITION DETAILS

PROJECT NO. 0102-0356

DRAWING NO. HWY-07

SHEET NO. 03.07

GENERAL NOTES:

1. GRANITE STONE TRANSITION CURBING WILL BE INSTALLED AS NOTED ON THE PLANS AND IN ACCORDANCE WITH FORM 816 SECTION 8.13 "STONE CURBING".
2. GRANITE STONE TRANSITION CURBING (INCLUDING DOWEL) WILL BE PAID FOR AT THE CONTRACT UNIT PRICE FOR "GRANITE STONE TRANSITION CURBING".
3. NEW INSTALLATIONS OF THIS CURBING SHALL ONLY BE ALLOWED ON THE MERRITT PARKWAY.
4. GRANITE STONE TRANSITION CURBING SHALL BE INSTALLED TO MATCH THE SLOPE OF SLOPED GRANITE STONE CURBING ON THE BRIDGE. ALL SECTIONS OF THE TRANSITION CURBING SHALL BE 2'-0" (610) LONG.

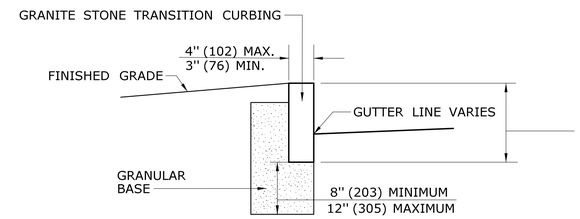

TYPICAL SECTION SHOWING INSTALLATION OF GRANITE STONE TRANSITION CURBING AT VERTICAL FACE

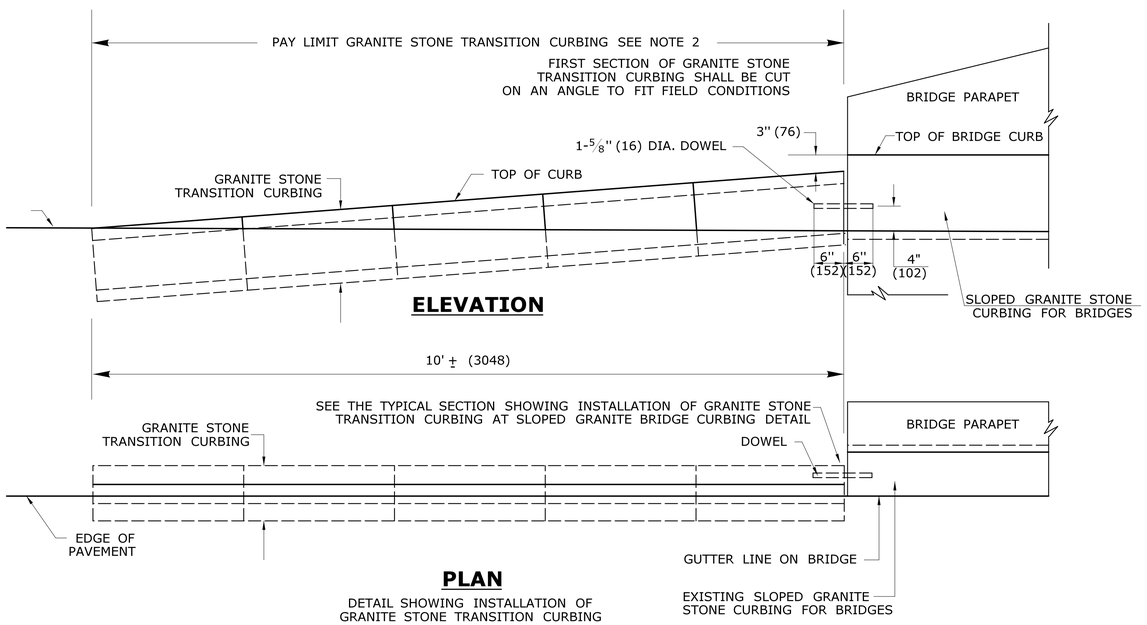

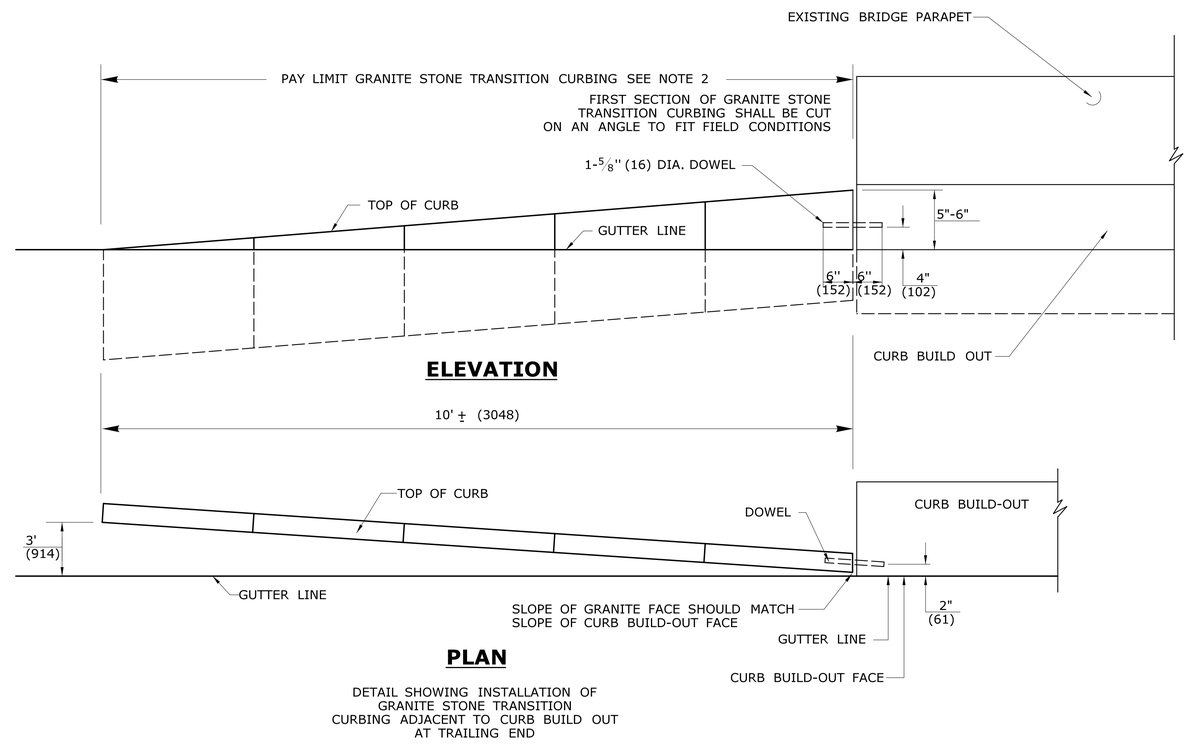

REV.	DATE	REVISION DESCRIPTION	SHEET NO.

THE INFORMATION, INCLUDING ESTIMATED QUANTITIES OF WORK, SHOWN ON THESE SHEETS IS BASED ON LIMITED INVESTIGATIONS BY THE STATE AND IS IN NO WAY WARRANTED TO INDICATE THE CONDITIONS OF ACTUAL QUANTITIES OF WORK WHICH WILL BE REQUIRED.

Plotted Date: 7/11/2017

DESIGNER/DRAFTER: -

CHECKED BY: -

SCALE AS NOTED

STATE OF CONNECTICUT
DEPARTMENT OF TRANSPORTATION

Filename: ...\102-356 - Misc. Merritt Details.dgn

SIGNATURE/BLOCK:
OFFICE OF ENGINEERING

APPROVED BY:

PROJECT TITLE:
REHABILITATION OF BRIDGE NO. 00722
WEST ROCKS RD. OVER ROUTE 15

TOWN: NORWALK

DRAWING TITLE:
GRANITE CURBING TRANSITION DETAILS

PROJECT NO. 0102-0356

DRAWING NO. HWY-08

SHEET NO. 03.08

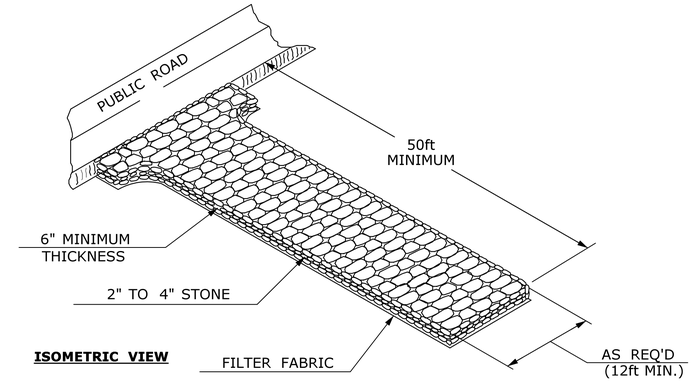

ANTI-TRACKING PAD

NOT TO SCALE

NOTES

1. CONCRETE WASHOUT AREA(S) SHALL BE INSTALLED PRIOR TO CONCRETE PLACEMENT ON SITE. THE CONCRETE WASHOUT AREA SHALL BE ENTIRELY SELF-CONTAINED.

2. THE CONTRACTOR SHALL SUBMIT THE DESIGN, LOCATION AND SIZING OF THE CONCRETE WASHOUT AREA(S) WITH THE PROJECT'S EROSION AND SEDIMENTATION CONTROL PLAN AND SHALL BE APPROVED BY THE ENGINEER.

LOCATION: WASHOUT AREA(S) ARE TO BE LOCATED AT LEAST 50 FEET FROM ANY STREAM, WETLAND, STORM DRAINS, OR OTHER SENSITIVE RESOURCE. THE FLOOD CONTINGENCY PLAN MUST ADDRESS THE CONCRETE WASHOUT IF THE WASHOUT IS TO BE LOCATED WITHIN THE FLOODPLAIN.

SIZE: THE WASHOUT MUST HAVE SUFFICIENT VOLUME TO CONTAIN ALL LIQUID AND CONCRETE WASTE GENERATED BY WASHOUT OPERATIONS INCLUDING, BUT NOT LIMITED TO, OPERATIONS ASSOCIATED WITH GROUT AND MORTAR.

3. SURFACE DISCHARGE IS UNACCEPTABLE. THEREFORE, HAY BALES OR OTHER CONTROL MEASURES, AS APPROVED BY THE ENGINEER, SHOULD BE USED AROUND THE PERIMETER OF THE CONCRETE WASHOUT AREA FOR CONTAINMENT.

4. SIGNS SHOULD BE PLACED AT THE CONSTRUCTION ENTRANCE, AT THE CONCRETE AREA(S) AND ELSEWHERE AS NECESSARY TO CLEARLY INDICATE THE LOCATION OF THE CONCRETE WASHOUT TO OPERATORS OF CONCRETE TRUCKS AND PUMP RIGS. WASHOUT AREA(S) SHOULD BE FLAGGED WITH SAFETY FENCING OR OTHER APPROVED METHOD.

5. WASHOUT AREA(S) ARE TO BE INSPECTED AT LEAST ONCE A WEEK FOR STRUCTURAL INTEGRITY, ADEQUATE HOLDING CAPACITY AND CHECKED FOR LEAKS, TEARS, OR OVERFLOWS. (AS REQUIRED BY THE CONSTRUCTION SITE ENVIRONMENTAL INSPECTION REPORT) WASHOUT AREA(S) SHOULD BE CHECKED AFTER HEAVY RAINS.

6. HARDENED CONCRETE WASTE SHOULD BE REMOVED AND DISPOSED OF WHEN THE WASTE HAS ACCUMULATED TO HALF OF THE CONCRETE WASHOUT'S HEIGHT. THE WASTE CAN BE STORED AT AN UPLAND LOCATION, AS APPROVED BY THE ENGINEER. ALL CONCRETE WASTE SHALL BE DISPOSED OF IN A MANNER CONSISTENT WITH ALL APPLICABLE LAWS, REGULATIONS, AND GUIDELINES.

7. PAYMENT FOR THIS ITEM IS TO BE INCLUDED UNDER THE GENERAL COST OF THE WORK FOR THE PROJECT, INCLUDING SITE RESTORATION.

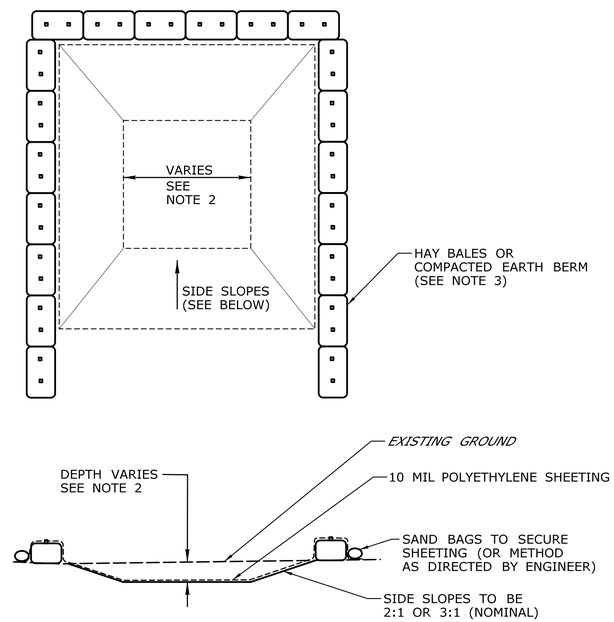

CONCRETE WASHOUT AREA

NOT TO SCALE
(SEE NOTE 2)

REV.	DATE	REVISION DESCRIPTION	SHEET NO.

THE INFORMATION, INCLUDING ESTIMATED QUANTITIES OF WORK, SHOWN ON THESE SHEETS IS BASED ON LIMITED INVESTIGATIONS BY THE STATE AND IS IN NO WAY WARRANTED TO INDICATE THE CONDITIONS OF ACTUAL QUANTITIES OF WORK WHICH WILL BE REQUIRED.

Plotted Date: 7/12/2017

DESIGNER/DRAFTER: -

CHECKED BY: -

SCALE AS NOTED

STATE OF CONNECTICUT
DEPARTMENT OF TRANSPORTATION

Filename: ...\Concrete Washout Detail.dgn

SIGNATURE/BLOCK:
OFFICE OF ENGINEERING

APPROVED BY:

PROJECT TITLE:
REHABILITATION OF BRIDGE NO. 00722
WEST ROCKS RD. OVER ROUTE 15

TOWN: NORWALK

DRAWING TITLE:
MISCELLANEOUS DETAILS

PROJECT NO. 0102-0356

DRAWING NO. HWY-09

SHEET NO. 03.09

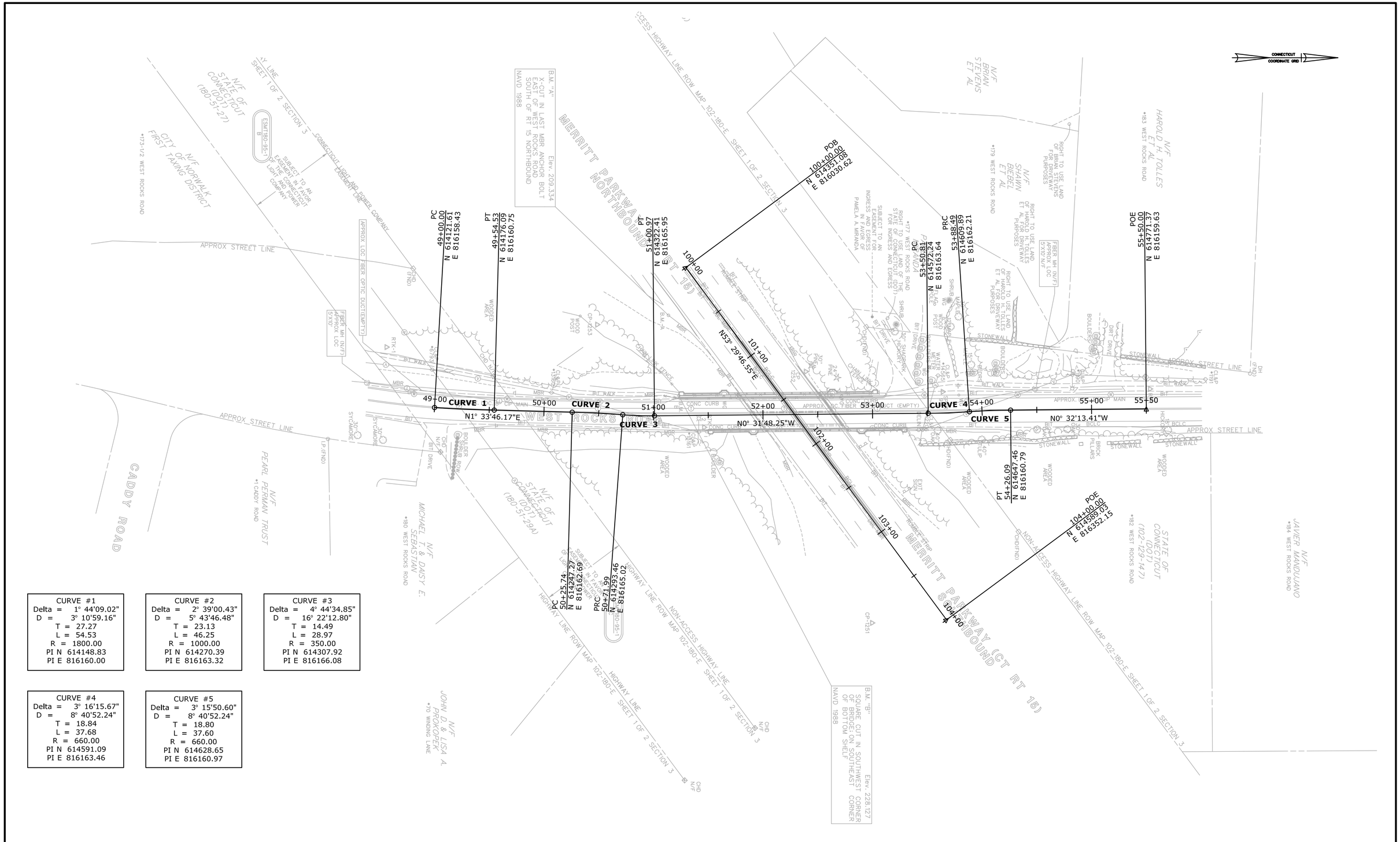

CURVE #1
Delta = 1° 44'09.02"
D = 3° 10'59.16"
T = 27.27
L = 54.53
R = 1800.00
PI N 614148.83
PI E 816160.00

CURVE #2
Delta = 2° 39'00.43"
D = 5° 43'46.48"
T = 23.13
L = 46.25
R = 1000.00
PI N 614270.39
PI E 816163.32

CURVE #3
Delta = 4° 44'34.85"
D = 16° 22'12.80"
T = 14.49
L = 28.97
R = 350.00
PI N 614307.92
PI E 816166.08

CURVE #4
Delta = 3° 16'15.67"
D = 8° 40'52.24"
T = 18.84
L = 37.68
R = 660.00
PI N 614591.09
PI E 816163.46

CURVE #5
Delta = 3° 15'50.60"
D = 8° 40'52.24"
T = 18.80
L = 37.60
R = 660.00
PI N 614628.65
PI E 816160.97

REV.	DATE	REVISION DESCRIPTION	SHEET NO.

THE INFORMATION, INCLUDING ESTIMATED QUANTITIES OF WORK, SHOWN ON THESE SHEETS IS BASED ON LIMITED INVESTIGATIONS BY THE STATE AND IS IN NO WAY WARRANTED TO INDICATE THE CONDITIONS OF ACTUAL QUANTITIES OF WORK WHICH WILL BE REQUIRED.

Plotted Date: 7/12/2017

DESIGNER/DRAFTER: WJG
CHECKED BY: MSC
SCALE IN FEET 0 40 80
SCALE 1"=40'

STATE OF CONNECTICUT
DEPARTMENT OF TRANSPORTATION

Filename: ...\HW_MSH_0102_0356_ALN-01.dgn

SIGNATURE/ BLOCK: OFFICE OF ENGINEERING
APPROVED BY:

PROJECT TITLE: REHABILITATION OF BRIDGE NO. 00722 WEST ROCKS RD. OVER ROUTE 15

TOWN: NORWALK

DRAWING TITLE: ALIGNMENT PLAN

PROJECT NO. 0102-0356
DRAWING NO. HWY-10
SHEET NO. 03.10

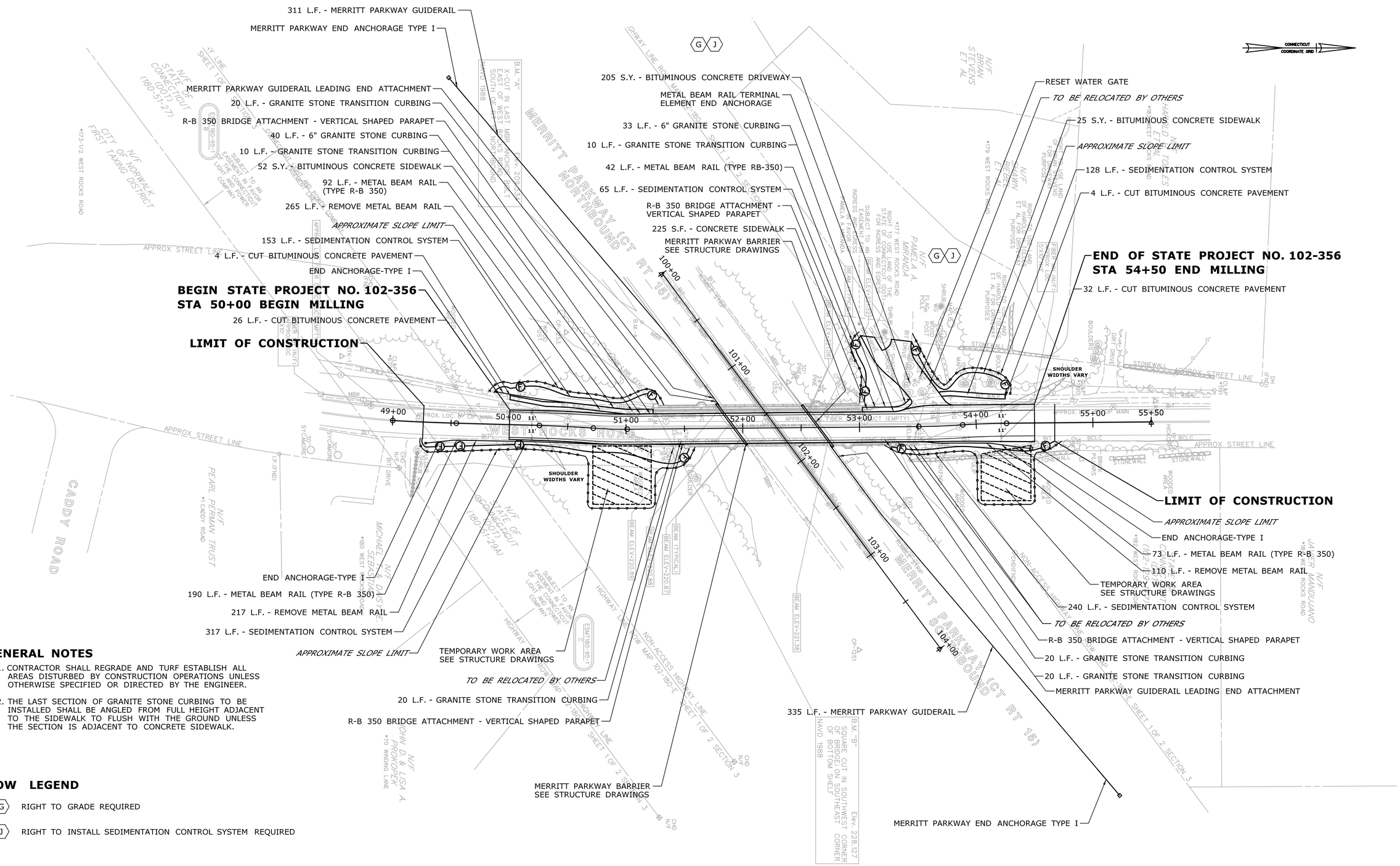

GENERAL NOTES

1. CONTRACTOR SHALL REGRADE AND TURF ESTABLISH ALL AREAS DISTURBED BY CONSTRUCTION OPERATIONS UNLESS OTHERWISE SPECIFIED OR DIRECTED BY THE ENGINEER.
2. THE LAST SECTION OF GRANITE STONE CURBING TO BE INSTALLED SHALL BE ANGLED FROM FULL HEIGHT ADJACENT TO THE SIDEWALK TO FLUSH WITH THE GROUND UNLESS THE SECTION IS ADJACENT TO CONCRETE SIDEWALK.

ROW LEGEND

(G) RIGHT TO GRADE REQUIRED

(J) RIGHT TO INSTALL SEDIMENTATION CONTROL SYSTEM REQUIRED

REV.	DATE	REVISION DESCRIPTION	SHEET NO.

THE INFORMATION, INCLUDING ESTIMATED QUANTITIES OF WORK, SHOWN ON THESE SHEETS IS BASED ON LIMITED INVESTIGATIONS BY THE STATE AND IS IN NO WAY WARRANTED TO INDICATE THE CONDITIONS OF ACTUAL QUANTITIES OF WORK WHICH WILL BE REQUIRED.

Plotted Date: 7/13/2017

DESIGNER/DRAFTER: HAR
CHECKED BY: MSC
SCALE IN FEET 0 40 80
SCALE 1"=40'

STATE OF CONNECTICUT
DEPARTMENT OF TRANSPORTATION

Filename: ...\HW_MSH_0102_0356_PLN-01.dgn

SIGNATURE/BLOCK: OFFICE OF ENGINEERING
APPROVED BY:

PROJECT TITLE: REHABILITATION OF BRIDGE NO. 00722 WEST ROCKS RD. OVER ROUTE 15

TOWN: NORWALK

DRAWING TITLE: HIGHWAY PLAN

PROJECT NO. 0102-0356
DRAWING NO. HWY-11
SHEET NO. 03.11

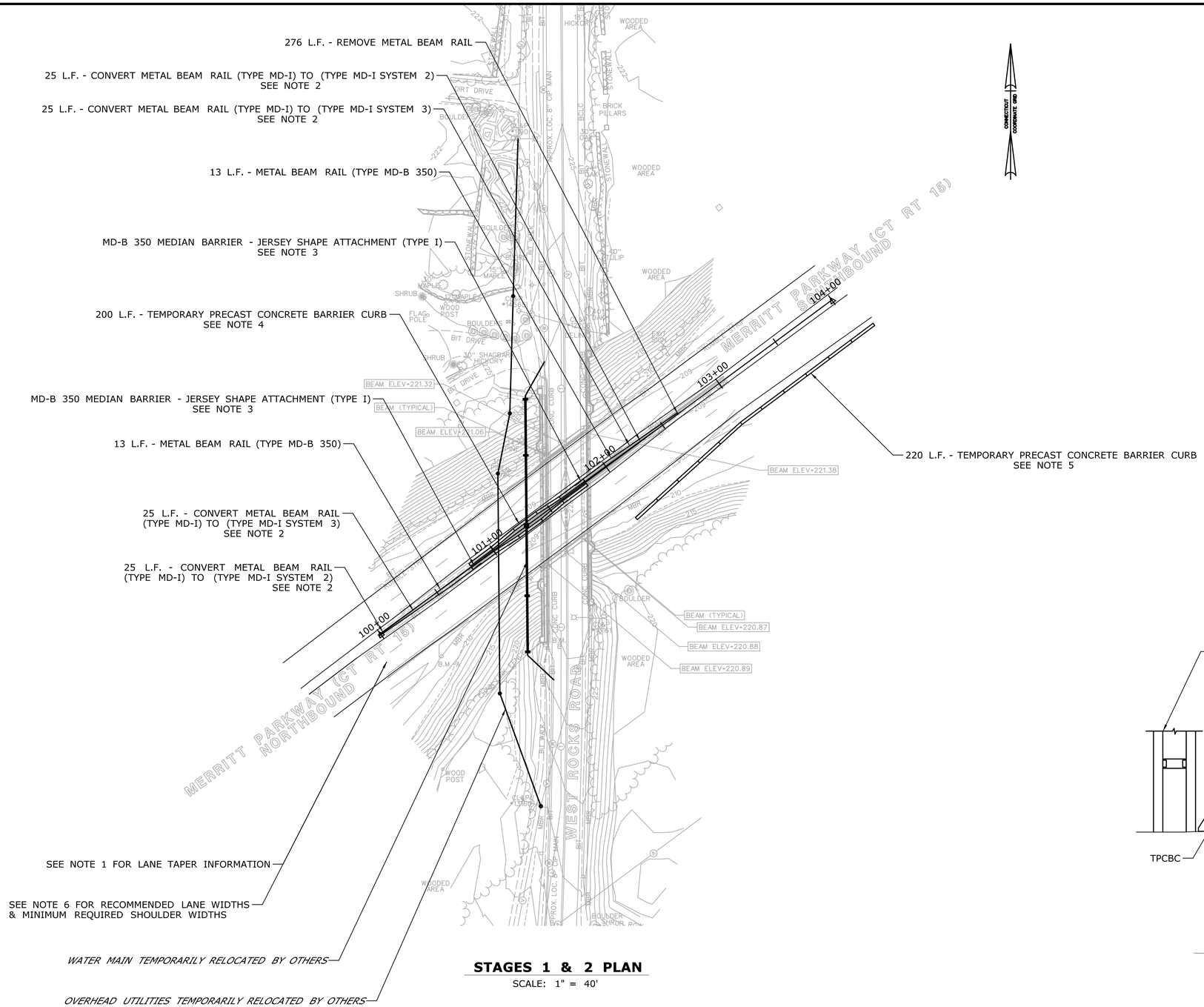

STAGES 1 & 2 PLAN

SCALE: 1" = 40'

GENERAL NOTES

STAGES 1 & 2 INVOLVE THE DIVERSION OF THE WATER MAIN TO ALLOW FOR THE REHABILITATION OF BRIDGE NO. 00722. THE USE OF A SUPPORT COLUMN FOR THE WATER MAIN IN THE MEDIAN OF ROUTE 15 MAY BE NECESSARY. IF A TEMPORARY WATER MAIN SUPPORT IS UTILIZED THEN PROPER ROADWAY PROTECTION FROM THE COLUMN WILL BE PROVIDED ON ROUTE 15 WITH THE USE OF TEMPORARY PRECAST CONCRETE BARRIER CURBING (TPCBC).

1. TRAVELWAY TO BE SHIFTED APPROXIMATELY 2 FEET FROM EXISTING CONDITIONS DUE TO TPCBC. NO LESS THAN 55 FEET OF LANE AND SHOULDER TAPER LENGTH MUST BE PROVIDED.

2. THE CONTRACTOR SHALL MAINTAIN A SMOOTH RAIL LINE WHEN TRANSITIONING FROM EXISTING RAIL TO STANDARD MD-B 350. TAPER RATE DURING TRANSITION SHALL NOT BE BELOW 20:1. REFER TO CTDOT STANDARD SHEET NO. HW-910_09b.

MD-I SYSTEM 2 POST SPACING	- 6' 3"
MD-I SYSTEM 2 POST SIZE	- S3X5.7 POSTS
MD-I SYSTEM 3 POST SPACING	- 3' 1-1/2"
MD-I SYSTEM 3 POST SIZE	- S3X5.7 POSTS
FULLY-DEVELOPED MD-B 350 POST SPACING	- 6' 3"
FULLY-DEVELOPED MD-B 350 POST SIZE	- W6X8.5 STRONG POSTS

3. REFER TO CTDOT STANDARD SHEET NO. HW-910_15 FOR PROPER ATTACHMENT OF MD-B 350 TO SAFETY SHAPE BARRIER.

4. FLARE RATE OF TPCBC SHALL NOT BE LESS THAN 10:1 AROUND TEMPORARY WATER MAIN SUPPORT. REFER TO CTDOT STANDARD DETAIL NO. HW-822_01.

5. BEGIN ROADSIDE TPCBC NO LESS THAN 4.5 FEET BEHIND EXISTING METAL BEAM RAIL. FLARE RATE TOWARDS ROADWAY SHALL NOT BE LESS THAN 10:1. THE TPCBC SHALL NOT PROTRUDE ONTO ROADWAY. PROVIDE ENOUGH LENGTH TO SUFFICIENTLY PROTECT THE STORAGE OF NECESSARY EQUIPMENT. TPCBC WILL BE RELOCATED FOR STAGE 3 UPON COMPLETION OF STAGES 1 & 2.

6. LANE WIDTH = 11'
   MINIMUM SHOULDER WIDTH = 1'

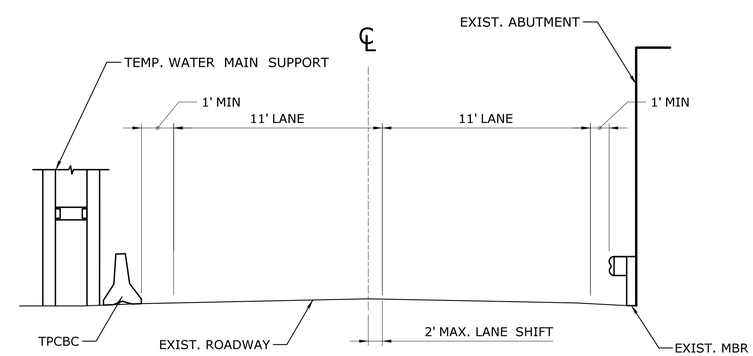

STAGES 1 & 2 TYPICAL NB & SB SECTION

NOT TO SCALE

REV.	DATE	REVISION DESCRIPTION	SHEET NO.

THE INFORMATION, INCLUDING ESTIMATED QUANTITIES OF WORK, SHOWN ON THESE SHEETS IS BASED ON LIMITED INVESTIGATIONS BY THE STATE AND IS IN NO WAY WARRANTED TO INDICATE THE CONDITIONS OF ACTUAL QUANTITIES OF WORK WHICH WILL BE REQUIRED.

Plotted Date: 7/13/2017

DESIGNER/DRAFTER: WJG
CHECKED BY: MSC
SCALE AS NOTED

STATE OF CONNECTICUT
DEPARTMENT OF TRANSPORTATION

Filename: ...\HW_MSH_0102_0356_PLN-02.dgn

SIGNATURE/BLOCK: OFFICE OF ENGINEERING
APPROVED BY:

PROJECT TITLE: REHABILITATION OF BRIDGE NO. 00722 WEST ROCKS RD. OVER ROUTE 15

TOWN: NORWALK

DRAWING TITLE: STAGE CONSTRUCTION STAGES 1 & 2

PROJECT NO. 0102-0356
DRAWING NO. HWY-12
SHEET NO. 03.12

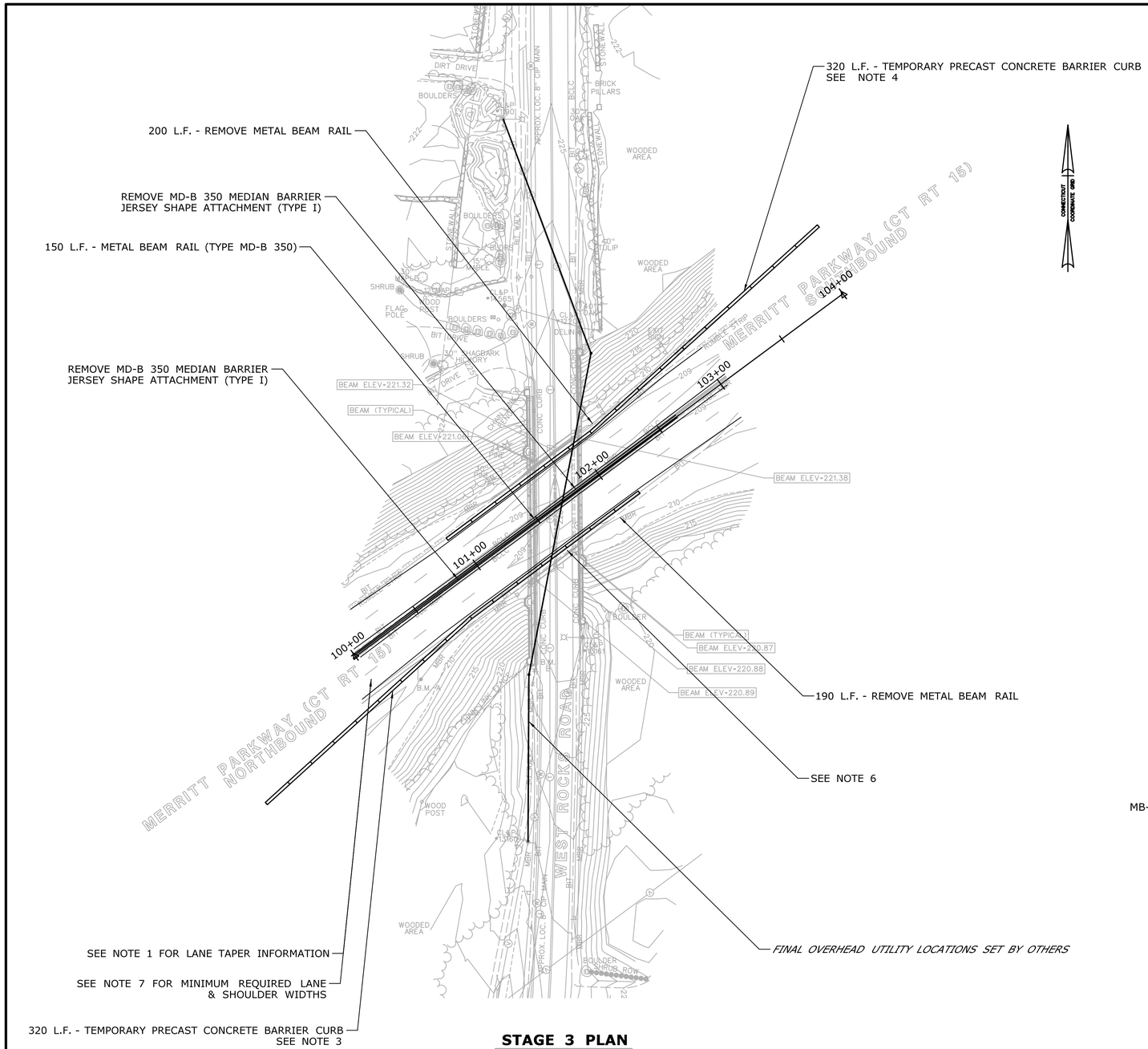

STAGE 3 PLAN

SCALE: 1" = 40'

GENERAL NOTES

STAGE 3 CONSISTS OF THE REMOVAL OF THE TEMPORARY WATER MAIN SUPPORT AND ITS PROTECTIVE BARRIERS. STAGES 1 & 2 TEMPORARY BARRIERS IN THE ROADWAY MEDIAN ARE TO BE REPLACED BY MD-B 350 MEDIAN GUIDERAIL. TEMPORARY PRECAST CONCRETE BARRIER CURBING (TPCBC) WILL BE PLACED ACCORDINGLY TO PROTECT WORK TO BE DONE ON BOTH THE NORTH AND SOUTH ABUTMENTS.

1. TRAVELWAY TO BE SHIFTED APPROXIMATELY 2.5 FEET FROM EXISTING CONDITIONS. NO LESS THAN 69 FEET OF LANE AND SHOULDER TAPER LENGTH MUST BE PROVIDED.

2. MD-B 350 GUIDERAIL MUST BE INSTALLED IMMEDIATELY FOLLOWING THE COMPLETION OF THE DISASSEMBLY OF THE TEMPORARY WATER MAIN SUPPORT AND PRIOR TO SHIFTING TRAFFIC TO STAGE 3. THE CONTRACTOR SHALL MAINTAIN A SMOOTH RAIL LINE WHEN TRANSITIONING FROM EXISTING RAIL TO STANDARD MD-B 350. REFER TO CTDOT STANDARD SHEET NO. HW-910_09b.

   FULLY-DEVELOPED MD-B 350 POST SPACING - 6'3"
   FULLY-DEVELOPED MD-B 350 POST SIZE - W6X8.5 STRONG POSTS

3. BEGIN NORTHBOUND ROADSIDE TPCBC NO LESS THAN 18 FEET PERPENDICULAR DISTANCE FROM EDGE OF ROADWAY. FLARE RATE TOWARDS ROADWAY SHALL NOT BE LESS THAN 10:1. PROVIDE ENOUGH LENGTH ON THE TRAILING END TO SUFFICIENTLY PROTECT CONSTRUCTION AND THE STORAGE OF NECESSARY EQUIPMENT.

4. BEGIN SOUTHBOUND ROADSIDE TPCBC NO LESS THAN 18 FEET PERPENDICULAR DISTANCE FROM EDGE OF ROADWAY. IF THERE IS INSUFFICIENT DISTANCE THEN THE LEADING EDGE OF THE TPCBC SHALL BE BURIED INTO SLOPE. FLARE RATE TOWARDS ROADWAY SHALL NOT BE LESS THAN 10:1. PROVIDE ENOUGH LENGTH ON THE TRAILING END TO SUFFICIENTLY PROTECT ANY CONSTRUCTION.

5. RELOCATION OF TPCBC FROM STAGES 1 & 2 TO STAGE 3 TO BE PAID FOR UNDER - RELOCATE TEMPORARY PRECAST CONCRETE BARRIER CURBING - 420 L.F.

6. PROVIDE NO LESS THAN 2 FEET BETWEEN FACE OF PROPOSED BARRIER BUILDOUT AND TPCBC TO ALLOW FOR SAFE WORKING SPACE DURING CONSTRUCTION.

7. LANE WIDTH = 10'
   MINIMUM SHOULDER WIDTH = 1'

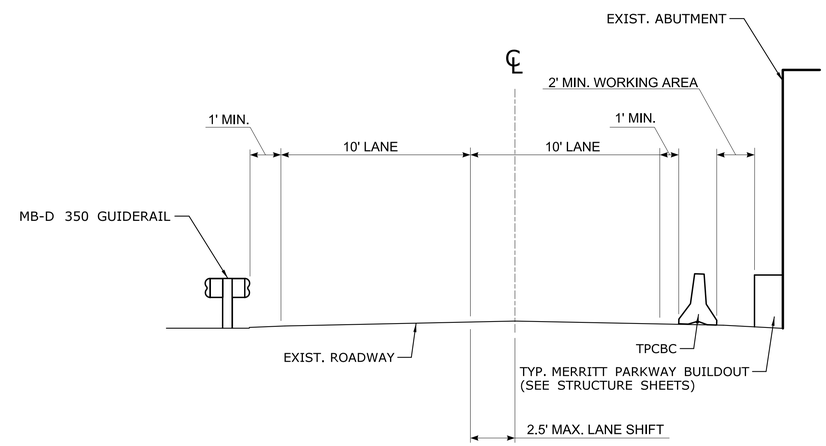

STAGE 3 TYPICAL NB & SB SECTION

NOT TO SCALE

REV.	DATE	REVISION DESCRIPTION	SHEET NO.

THE INFORMATION, INCLUDING ESTIMATED QUANTITIES OF WORK, SHOWN ON THESE SHEETS IS BASED ON LIMITED INVESTIGATIONS BY THE STATE AND IS IN NO WAY WARRANTED TO INDICATE THE CONDITIONS OF ACTUAL QUANTITIES OF WORK WHICH WILL BE REQUIRED.

Plotted Date: 7/13/2017

DESIGNER/DRAFTER: WJG
CHECKED BY: MSC
SCALE AS NOTED

STATE OF CONNECTICUT
DEPARTMENT OF TRANSPORTATION

Filename: ...\HW_MSH_0102_0356_PLN-03.dgn

SIGNATURE/BLOCK: OFFICE OF ENGINEERING
APPROVED BY:

PROJECT TITLE: REHABILITATION OF BRIDGE NO. 00722 WEST ROCKS RD. OVER ROUTE 15

TOWN: NORWALK

DRAWING TITLE: STAGE CONSTRUCTION STAGE 3

PROJECT NO. 0102-0356
DRAWING NO. HWY-13
SHEET NO. 03.13

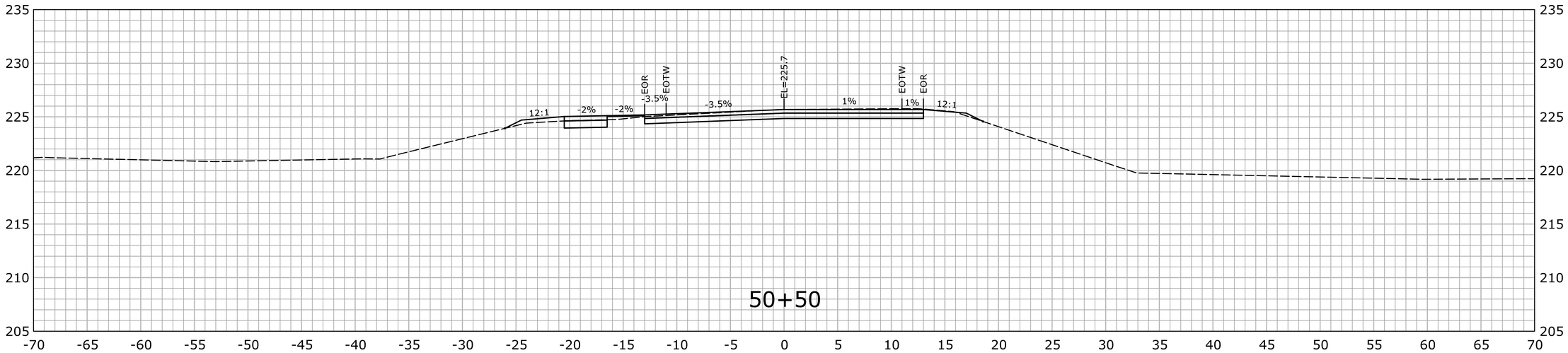

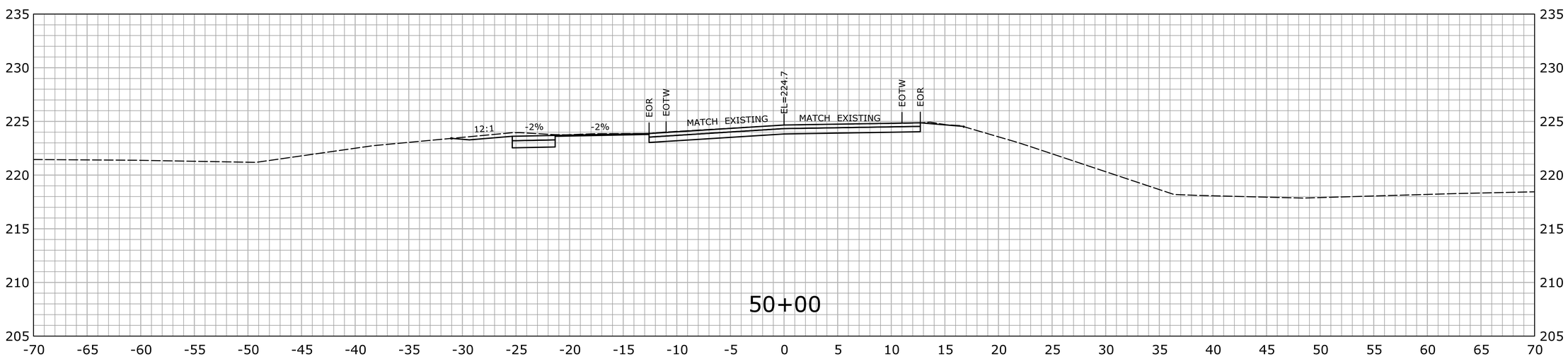

STA.50+00 TO STA.50+50

REV.	DATE	REVISION DESCRIPTION	SHEET NO.

THE INFORMATION, INCLUDING ESTIMATED QUANTITIES OF WORK, SHOWN ON THESE SHEETS IS BASED ON LIMITED INVESTIGATIONS BY THE STATE AND IS IN NO WAY WARRANTED TO INDICATE THE CONDITIONS OF ACTUAL QUANTITIES OF WORK WHICH WILL BE REQUIRED.

Plotted Date: 7/11/2017

DESIGNER/DRAFTER: HAR

CHECKED BY: MSC

SCALE IN FEET 0 5 10

SCALE 1" = 5'

STATE OF CONNECTICUT
DEPARTMENT OF TRANSPORTATION

Filename: ...\HW_MSH_0102_0356_XSC-01.dgn

SIGNATURE/ BLOCK:

OFFICE OF ENGINEERING

APPROVED BY: DATE:

PROJECT TITLE:

REHABILITATION OF BRIDGE NO. 00722
WEST ROCKS RD. OVER ROUTE 15

TOWN: NORWALK

DRAWING TITLE: CROSS-SECTIONS

PROJECT NO. 0102-0356

DRAWING NO. HWY-14

SHEET NO. 03.14

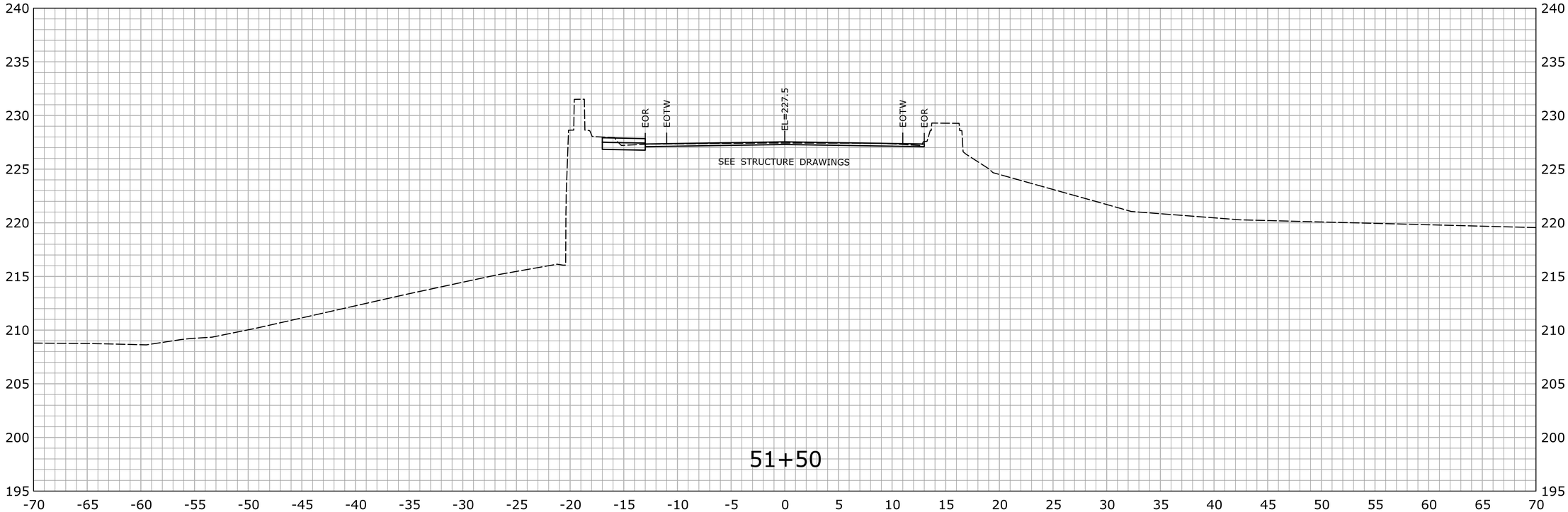

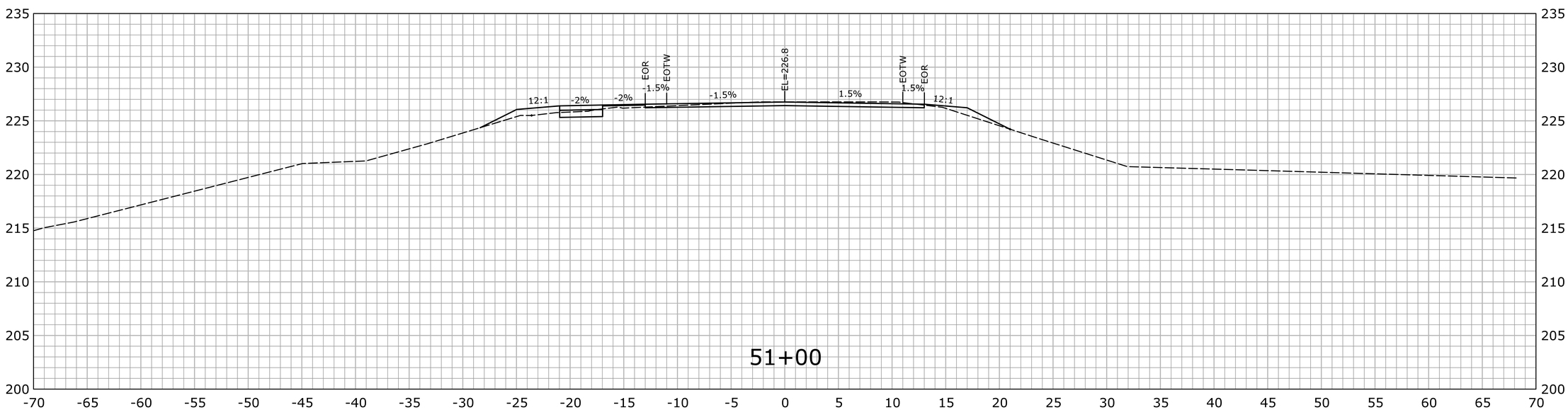

STA.51+00 TO STA.51+50

REV.	DATE	REVISION DESCRIPTION	SHEET NO.

THE INFORMATION, INCLUDING ESTIMATED QUANTITIES OF WORK, SHOWN ON THESE SHEETS IS BASED ON LIMITED INVESTIGATIONS BY THE STATE AND IS IN NO WAY WARRANTED TO INDICATE THE CONDITIONS OF ACTUAL QUANTITIES OF WORK WHICH WILL BE REQUIRED.

Plotted Date: 7/11/2017

DESIGNER/DRAFTER: HAR

CHECKED BY: MSC

SCALE IN FEET 0 5 10

SCALE 1" = 5'

STATE OF CONNECTICUT
DEPARTMENT OF TRANSPORTATION

Filename: ...\HW_MSH_0102_0356_XSC-01.dgn

SIGNATURE/ BLOCK:
OFFICE OF ENGINEERING

APPROVED BY: DATE:

PROJECT TITLE:
REHABILITATION OF BRIDGE NO. 00722
WEST ROCKS RD. OVER ROUTE 15

TOWN: NORWALK

DRAWING TITLE: CROSS-SECTIONS

PROJECT NO. 0102-0356

DRAWING NO. HWY-15

SHEET NO. 03.15

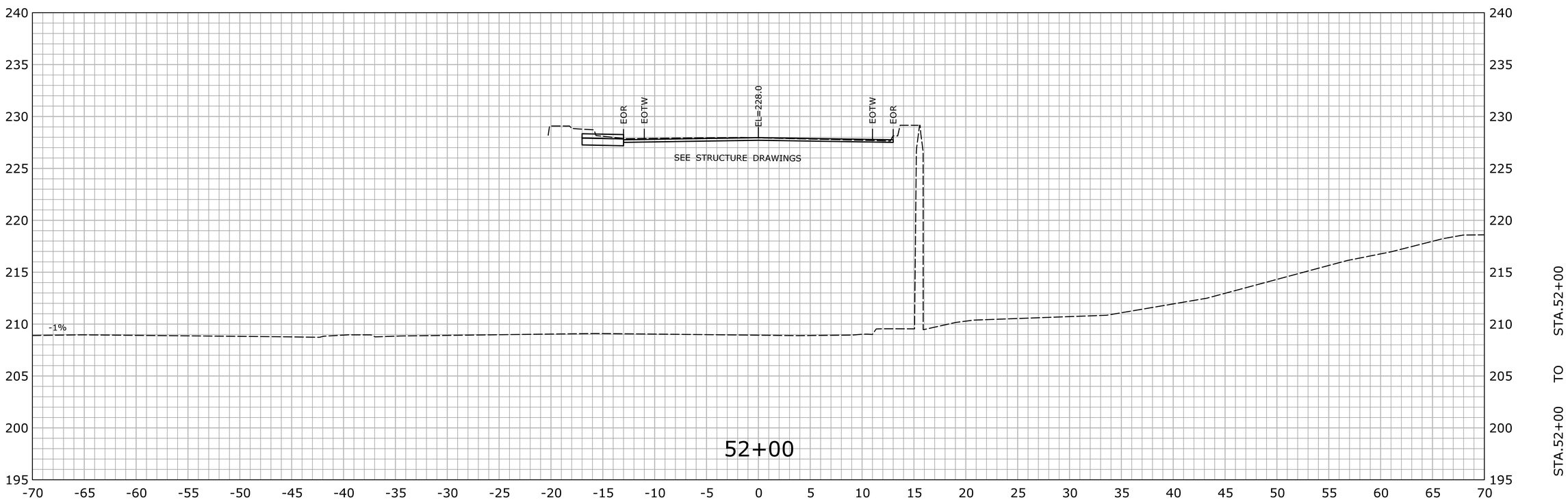

REV.	DATE	REVISION DESCRIPTION	SHEET NO.

THE INFORMATION, INCLUDING ESTIMATED QUANTITIES OF WORK, SHOWN ON THESE SHEETS IS BASED ON LIMITED INVESTIGATIONS BY THE STATE AND IS IN NO WAY WARRANTED TO INDICATE THE CONDITIONS OF ACTUAL QUANTITIES OF WORK WHICH WILL BE REQUIRED.

Plotted Date: 7/11/2017

DESIGNER/DRAFTER: HAR

CHECKED BY: MSC

SCALE IN FEET

0 5 10

SCALE 1" = 5'

STATE OF CONNECTICUT
DEPARTMENT OF TRANSPORTATION

Filename: ...\HW_MSH_0102_0356_XSC-01.dgn

SIGNATURE/BLOCK:

OFFICE OF ENGINEERING

APPROVED BY: DATE:

PROJECT TITLE:

REHABILITATION OF BRIDGE NO. 00722
WEST ROCKS RD. OVER ROUTE 15

TOWN: NORWALK

DRAWING TITLE: CROSS-SECTIONS

PROJECT NO. 0102-0356

DRAWING NO. HWY-16

SHEET NO. 03.16

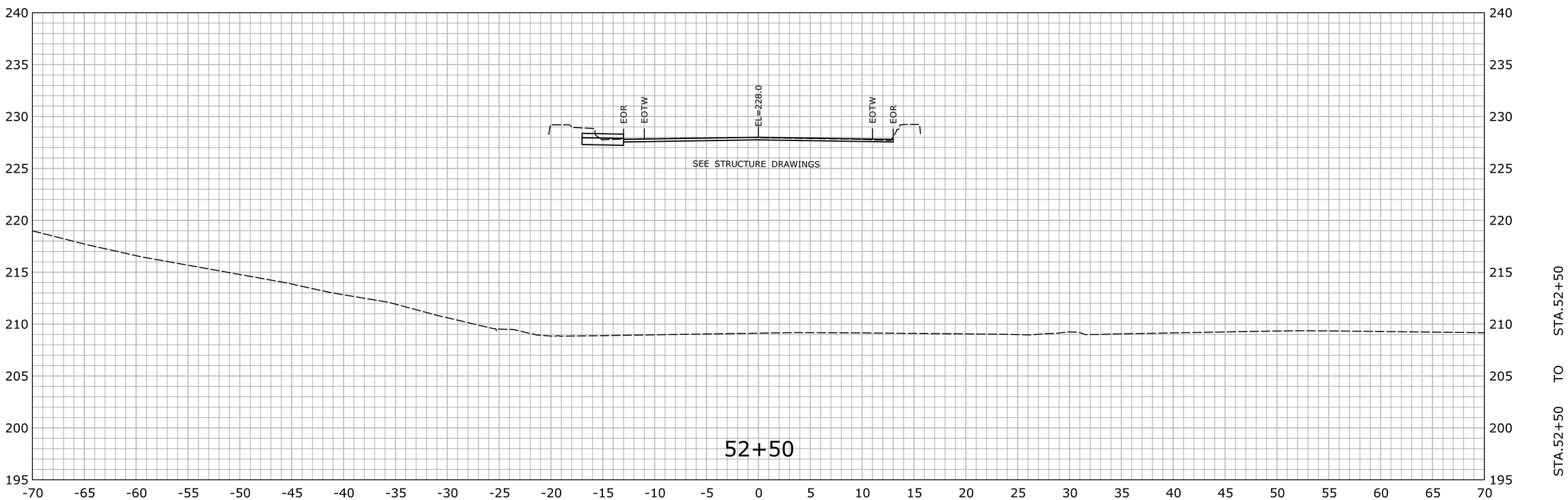

REV.	DATE	REVISION DESCRIPTION	SHEET NO.

THE INFORMATION, INCLUDING ESTIMATED QUANTITIES OF WORK, SHOWN ON THESE SHEETS IS BASED ON LIMITED INVESTIGATIONS BY THE STATE AND IS IN NO WAY WARRANTED TO INDICATE THE CONDITIONS OF ACTUAL QUANTITIES OF WORK WHICH WILL BE REQUIRED.

Plotted Date: 7/11/2017

DESIGNER/DRAFTER: HAR

CHECKED BY: MSC

SCALE IN FEET 0 5 10

SCALE 1" = 5'

STATE OF CONNECTICUT
DEPARTMENT OF TRANSPORTATION

Filename: ...\HW_MSH_0102_0356_XSC-01.dgn

SIGNATURE/BLOCK:
OFFICE OF ENGINEERING

APPROVED BY: DATE:

PROJECT TITLE:
REHABILITATION OF BRIDGE NO. 00722
WEST ROCKS RD. OVER ROUTE 15

TOWN: NORWALK

DRAWING TITLE: CROSS-SECTIONS

PROJECT NO. 0102-0356

DRAWING NO. HWY-17

SHEET NO. 03.17

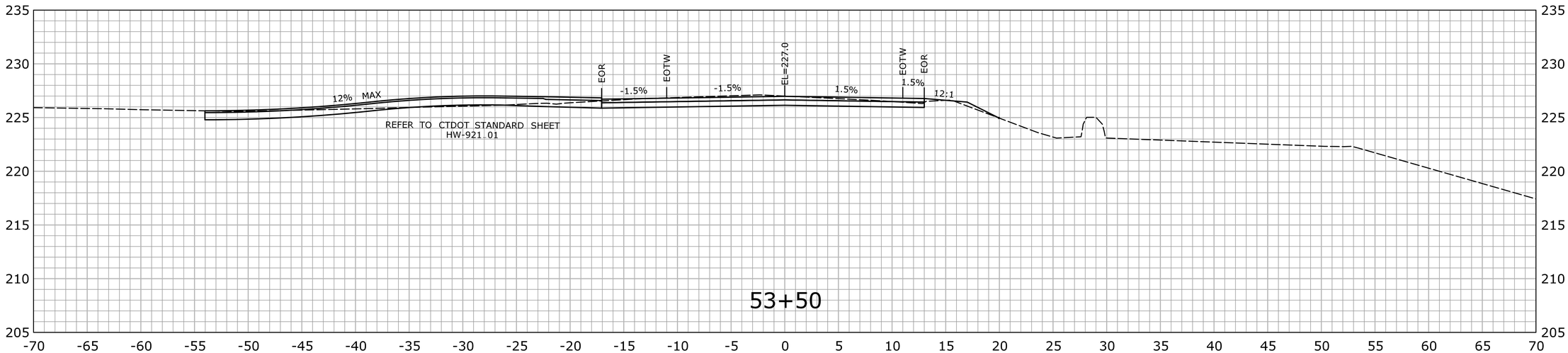

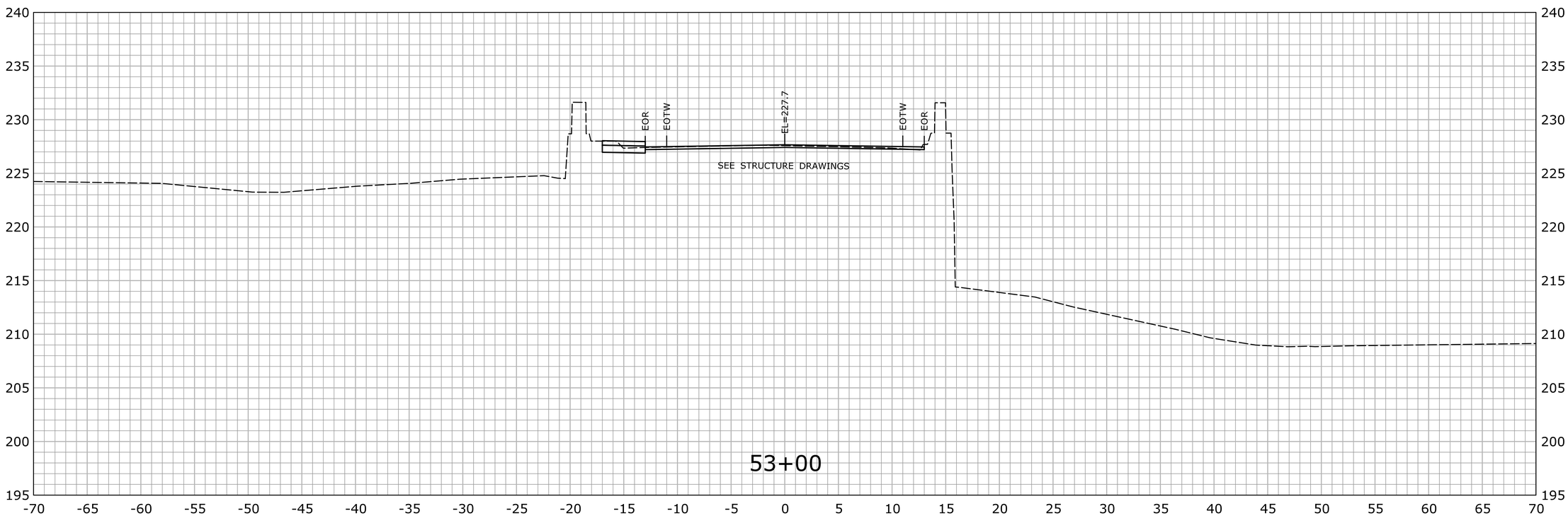

STA.53+00 TO STA.53+50

REV.	DATE	REVISION DESCRIPTION	SHEET NO.

THE INFORMATION, INCLUDING ESTIMATED QUANTITIES OF WORK, SHOWN ON THESE SHEETS IS BASED ON LIMITED INVESTIGATIONS BY THE STATE AND IS IN NO WAY WARRANTED TO INDICATE THE CONDITIONS OF ACTUAL QUANTITIES OF WORK WHICH WILL BE REQUIRED.

Plotted Date: 7/11/2017

DESIGNER/DRAFTER: HAR

CHECKED BY: MSC

SCALE IN FEET 0 5 10

SCALE 1" = 5'

STATE OF CONNECTICUT
DEPARTMENT OF TRANSPORTATION

Filename: ...\HW_MSH_0102_0356_XSC-01.dgn

SIGNATURE/ BLOCK:

OFFICE OF ENGINEERING

APPROVED BY: DATE:

PROJECT TITLE:

REHABILITATION OF BRIDGE NO. 00722
WEST ROCKS RD. OVER ROUTE 15

TOWN: NORWALK

DRAWING TITLE: CROSS-SECTIONS

PROJECT NO. 0102-0356

DRAWING NO. HWY-18

SHEET NO. 03.18

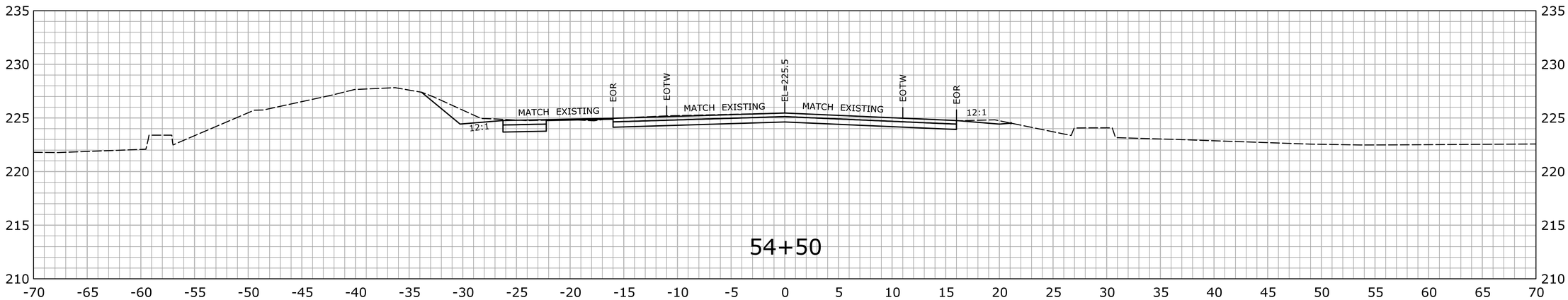

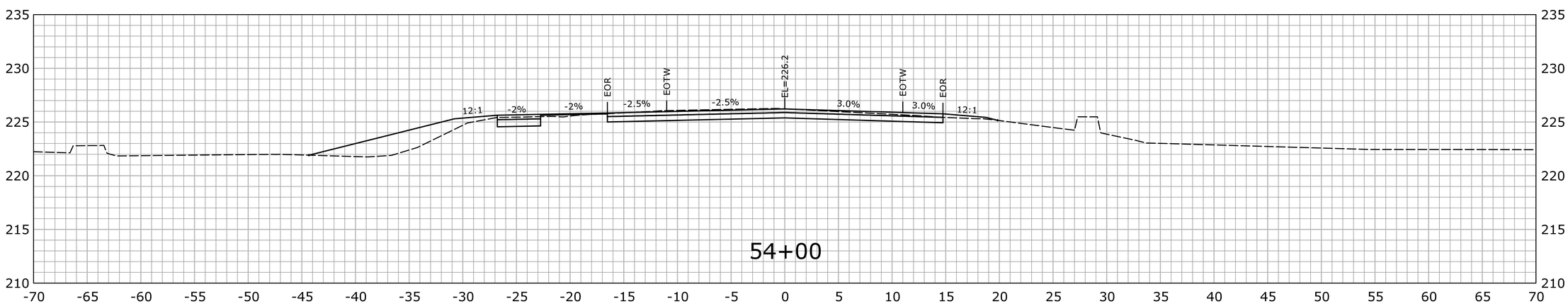

STA.54+00 TO STA.54+51

REV.	DATE	REVISION DESCRIPTION	SHEET NO.

THE INFORMATION, INCLUDING ESTIMATED QUANTITIES OF WORK, SHOWN ON THESE SHEETS IS BASED ON LIMITED INVESTIGATIONS BY THE STATE AND IS IN NO WAY WARRANTED TO INDICATE THE CONDITIONS OF ACTUAL QUANTITIES OF WORK WHICH WILL BE REQUIRED.

Plotted Date: 7/13/2017

DESIGNER/DRAFTER: HAR

CHECKED BY: MSC

SCALE IN FEET

0 5 10

SCALE 1" = 5'

STATE OF CONNECTICUT
DEPARTMENT OF TRANSPORTATION

Filename: ...\HW_MSH_0102_0356_XSC-01.dgn

SIGNATURE/ BLOCK:

OFFICE OF ENGINEERING

APPROVED BY: DATE:

PROJECT TITLE:

REHABILITATION OF BRIDGE NO. 00722
WEST ROCKS RD. OVER ROUTE 15

TOWN: NORWALK

DRAWING TITLE: CROSS-SECTIONS

PROJECT NO. 0102-0356

DRAWING NO. HWY-19

SHEET NO. 03.19