SUBSET-07 - UTILITY AND WATER

INDEX OF DRAWINGS

DRAWING NUMBER	DRAWING TITLE	DRAWING NUMBER	DRAWING TITLE
U-01	INDEX OF UTILITY DRAWINGS		
U-02	GENERAL NOTES AND LEGEND		
U-03	TEMPORARY RELOCATED WATERMAIN		
U-04	PERMANENT RELOCATED WATERMAIN		
U-05	WATERMAIN SUPPORT DETAILS		
U-06	WATERMAIN DETAILS - 1		
U-07	WATERMAIN DETAILS - 2		

DESIGNED BY:
CDM SMITH
111 FOUNDERS PLAZA,
SUITE 1600
EAST HARTFORD, CT 06108

STATE OF CONNECTICUT
SHARAT KALLURI
No. 024145
PROFESSIONAL ENGINEER

Sharat K. Kalluri
2017.07.28
09:47:54-04'00'

REV.	DATE	REVISION DESCRIPTION	SHEET NO.

THE INFORMATION, INCLUDING ESTIMATED QUANTITIES OF WORK, SHOWN ON THESE SHEETS IS BASED ON LIMITED INVESTIGATIONS BY THE STATE AND IS IN NO WAY WARRANTED TO INDICATE THE CONDITIONS OF ACTUAL QUANTITIES OF WORK WHICH WILL BE REQUIRED.

Plotted Date: 7/18/2017

DESIGNER/DRAFTER: LUKOVITS
CHECKED BY: EGAN

STATE OF CONNECTICUT
DEPARTMENT OF TRANSPORTATION

Filename: ...\HW_MSH_220121_U-01.dgn

SIGNATURE/ BLOCK:

PROJECT TITLE:
REHABILITATION OF BRIDGE NO. 00722 WEST ROCKS RD. OVER ROUTE 15

TOWN: **NORWALK**

DRAWING TITLE: **INDEX OF UTILITY DRAWINGS**

PROJECT NO. **0102-0356**
DRAWING NO. **U-01**
SHEET NO. **07.01**

GENERAL NOTES

1. ALL CONSTRUCTION SHALL BE IN ACCORDANCE WITH FIRST TAXING DISTRICT OF THE CITY OF NORWALK (DISTRICT).
2. THE CONTRACTOR SHALL PERFORM ALL LAYOUT WORK NECESSARY FOR THE SATISFACTORY EXECUTION OF THE CONSTRUCTION AS SHOWN ON THE CONTRACT DRAWINGS. THE CONTRACTOR SHALL EMPLOY COMPETENT PERSONNEL. THIS SHALL INCLUDE BUT SHALL NOT BE LIMITED TO STAKEOUT, LAYOUT AND ELEVATIONS FOR THE WATER MAINS AND APPURTENANCES AS SHOWN AND REQUIRED CONSISTENT WITH THE CURRENT PRACTICES OF THE DISTRICT.
3. THE LOCATIONS OF NEW VALVES AND MAINS ON THE CONTRACT DRAWINGS ARE APPROXIMATE. PRIOR TO THE START OF INSTALLATION OF NEW VALVES AND MAINS, THE EXACT FIELD LOCATION SHALL BE APPROVED BY THE ENGINEER.
4. THE CONTRACTOR SHALL BE HELD RESPONSIBLE FOR THE PROTECTION AND SAFE GUARDING OF ALL MONUMENTS, CONTROL POINTS AND BENCH MARKS. ANY REPLACEMENT OR RE-ESTABLISHMENT OF MONUMENTS, CONTROL POINTS OR BENCH MARKS SHALL BE REPLACED BY THE CONTRACTOR AT NO COST TO THE DISTRICT.
5. AT LEAST 3 FULL WORKING DAYS BUT NOT MORE THAN 30 DAYS PRIOR TO THE START OF CONSTRUCTION, THE CONTRACTOR SHALL CONTACT THE "CALL BEFORE YOU DIG" CALL CENTER AT (800) 922-4455.
6. THE CONTRACTOR SHALL OBTAIN ALL NECESSARY PERMITS AND APPROVALS REQUIRED FOR THE CONSTRUCTION, INCLUDING PROVIDING ALL FEES.
7. THE PLANS ARE BASED ON THE CTDOT SURVEY PROVIDED TO DISTRICT FOR USE IN THE WATERMAIN DESIGN.
8. SURVEY HORIZONTAL ACCURACY TO A-2 STANDARD.
9. SURVEY VERTICAL ACCURACY TO V-2 STANDARD. SURVEY TOPOGRAPHIC ACCURACY TO T-2 STANDARD. ELEVATIONS ARE REFERENCED TO THE NORTH AMERICAN VERTICAL DATUM OF 1988 (NAVD 88).
10. THE LOCATIONS OF UTILITIES OR OTHER UNDERGROUND MAN-MADE FEATURES WERE ASCERTAINED WITH REASONABLE CARE AND RECORDED IN GOOD FAITH FROM VARIOUS SOURCES, INCLUDING THE RECORDS OF MUNICIPAL AND OTHER PUBLIC SERVICE CORPORATIONS, AND THEREFORE THE LOCATION OF KNOWN UTILITIES MAY ONLY BE APPROXIMATE. THE CONTRACTOR SHALL BE RESPONSIBLE FOR DETERMINING THE EXISTENCE AND LOCATION OF ALL SUBSURFACE UTILITIES, LINES, CABLES AND PIPES THAT MAY AFFECT PERFORMANCE OF THE WORK.
11. THE CONTRACTOR SHALL PERFORM ALL WORK WITH CARE SO THAT ANY MATERIALS WHICH ARE TO REMAIN IN PLACE, OR WHICH ARE TO REMAIN THE PROPERTY OF THE DISTRICT, WILL NOT BE DAMAGED. IF THE CONTRACTOR DAMAGES ANY MATERIAL, IT SHALL BE REPAIRED OR REPLACED IN A MANNER SATISFACTORY TO THE ENGINEER, AT NO COST TO THE DISTRICT. ANY DAMAGE TO EXISTING CURBS, SIDEWALKS OR ANY OTHER ROAD APPURTENANCES DURING CONSTRUCTION WILL BE REPLACED BY THE CONTRACTOR AS DIRECTED BY THE ENGINEER, AT NO COST TO THE DISTRICT.
12. THE CONTRACTOR SHALL BE RESPONSIBLE FOR GUARDING AND PROTECTING OPEN AND UNATTENDED EXCAVATIONS AND OTHER POTENTIALLY HAZARDOUS LOCATIONS IN AND ADJACENT TO AREAS LAWFULLY FREQUENTED BY ANY PERSON. SUCH GUARDING AND PROTECTION SHALL CONSIST OF ANY ONE, OR A COMBINATION OF THE FOLLOWING:
    A. A SUBSTANTIAL FENCE OR BARRICADE, NOT LESS THAN FOUR (4) FEET IN HEIGHT AND MOUNTED ON SATISFACTORY SUPPORTS SPACED AT INTERVALS OF NOT MORE THAN TEN (10) FEET. WARNING SIGNS READING "DANGER-KEEP OUT" SHALL BE MOUNTED ON THE FENCE OR BARRICADE, AS REQUIRED BY THE ENGINEER, AT NO MORE THAN ONE HUNDRED (100) FOOT INTERVALS. THE SIGNS SHALL BE 16"X24" WITH FIVE (5) INCH BLACK LETTERS ON A WHITE BACKGROUND. ALL FENCES, BARRICADES AND WARNING SIGNS SHALL BE FURNISHED, ERECTED, RELOCATED, MAINTAINED AND REMOVED AS REQUIRED.
    B. A FORTY-EIGHT (48) INCH EXTENSION OF THE TRENCH SHEETING ABOVE THE GROUND SURFACE ADJACENT TO THE EXCAVATION.
    C. A SUBSTANTIAL COVERING OVER THE EXCAVATION. WHERE IT IS POSSIBLE THAT VEHICLES WILL MOVE OVER SUCH COVERING, THE COVERING SHALL BE OF SUFFICIENT STRENGTH TO WITHSTAND THE LOADING.
13. ROCK EXCAVATION, BOULDERS AND SURPLUS EXCAVATED MATERIAL, WHICH, IN THE OPINION OF THE ENGINEER, CANNOT BE USED AS BACKFILL SHALL BE USED IN OTHER PORTIONS OF THE WORK AS DIRECTED BY THE ENGINEER OR IF NOT SO DIRECTED SHALL BE REMOVED FROM THE SITE AND DISPOSED OF BY THE CONTRACTOR AT A DISPOSAL SITE SUPPLIED BY THE CONTRACTOR AT NO ADDITIONAL COST TO THE DISTRICT.
14. ALL WATER MAINS SHALL HAVE A MINIMUM COVER OF 4-1/2' (54") UNLESS OTHERWISE SHOWN ON THE DRAWINGS OR AS DIRECTED BY THE ENGINEER.
15. WATER MAINS CROSSING SEWERS SHALL BE LAID TO PROVIDE A MINIMUM VERTICAL DISTANCE OF 18" BETWEEN THE OUTSIDE OF THE WATER MAIN AND THE OUTSIDE OF THE SEWER. THIS SHALL BE THE CASE WHERE THE WATER MAIN IS EITHER ABOVE OR BELOW THE SEWER WITH PREFERENCE TO THE WATER MAIN LOCATED ABOVE THE SEWER.
16. AT CROSSINGS, ONE FULL LENGTH OF WATER MAIN SHALL BE LOCATED SO BOTH JOINTS WILL BE AS FAR FROM THE SEWER AS POSSIBLE. SPECIAL STRUCTURAL SUPPORT FOR THE WATER AND SEWER PIPES MAY BE REQUIRED.
17. THE CONTRACTOR SHALL BE REQUIRED TO COMPLY WITH THE HYDROSTATIC TESTING PROCEDURES CONTAINED WITHIN WATER DEPARTMENT STANDARD SPECIFICATIONS ITEM 700R, WATER MAINS AND APPURTENANCES.
18. UNLESS OTHERWISE SPECIFIED, WHERE WATER MAINS ARE TO BE ABANDONED, THE CONTRACTOR SHALL REMOVE ALL VALVES, HYDRANTS, VALVE BOXES, AND COVERS OFF MAINS, AND SHALL SEAL ALL ENDS OF MAINS. IN ADDITION, VALVE CHAMBERS SHALL HAVE THEIR HEADS AND COVERS REMOVED, SHALL BE BROKEN DOWN TO A DEPTH FOUR (4) FEET BELOW GRADE, SHALL HAVE BOTTOM SLAB BROKEN UP IN SUCH A MANNER AS TO PREVENT WATER FROM BEING TRAPPED, AND SHALL HAVE THE ENTIRE OPENING FILLED IN AND COMPACTED IN ACCORDANCE WITH THE SPECIFICATIONS, TRENCH EXCAVATION AND BACKFILL AND AS DIRECTED BY THE ENGINEER. UNLESS SPECIFIC ITEMS ARE PROVIDED FOR IN THE BID PROPOSAL, THE COST OF THIS WORK SHALL BE DEEMED INCLUDED IN THE PRICES BID FOR ALL ITEMS OF WORK.
19. THE CONTRACTOR SHALL ADJUST ALL VALVE BOXES TO THE FINAL FINISHED GRADE, THE COST OF THIS WORK SHALL BE DEEMED INCLUDED IN THE PRICES BID FOR ALL ITEMS OF WORK.
20. THE CONTRACTOR SHALL PROVIDE WRITTEN NOTIFICATION TO THE DISTRICT AND TO INDIVIDUAL CUSTOMERS WHO MAY BE AFFECTED BY A WATER OUTAGE DURING CONSTRUCTION AT LEAST 48 HOURS PRIOR TO THE OUTAGE.
21. ALL PIPE SHALL BE DR17 HIGH DENSITY POLYETHYLENE (HDPE) PIPE FROM PE4710 RESIN, PER AWWA C901 STANDARDS.
22. ALL NEW WATER MAIN, INCLUDING NEW WATER MAIN LOCATED BENEATH THE BRIDGE AND BURIED WATER MAIN OUTSIDE LIMITS OF BRIDGE SHALL BE RESTRAINED. UNLESS OTHERWISE SHOWN, ALL WATER MAIN FITTINGS SHALL BE RESTRAINED MECHANICAL JOINT FITTINGS AS SPECIFIED. ALL NON-BURIED WATER MAIN LOCATED BENEATH THE BRIDGE SHALL BE PROVIDED WITH INSULATION AND PROTECTIVE JACKET. REFER TO DETAILS ON DRAWINGS U-3.
23. ALL PIPE AND FITTINGS SHALL BE INSULATED TO A POINT WHERE A MINIMUM OF 4.5' OF COVER IS MAINTAINED. INSULATION SHALL EXTEND INTO THE PIPE SLEEVES THROUGH THE BACK WALL UP TO THE LINK-SEAL. INSULATION SHALL BE PITTSBURGH CORNING FOAMGLAS OR EQUAL AND WRAPPED IN JACKETING.
24. ALL COMPONENTS OF THE SUPPORT ROLLER ASSEMBLY INCLUDING NUTS, WASHERS, RODS, BASE PLATES, ROLLERS ETC. AND THE U-BOLTS AND ASSOCIATED NUTS AND BASE SHALL BE SUBMITTED FOR APPROVAL, PRIOR TO THE INSTALLATION OF THE PROPOSED WATER MAIN.
25. TEST PRESSURE SHALL BE 150 PSI, AS DETERMINED BY THE DISTRICT.
26. ALL WATER MAIN AND APPURTENANCES SHALL BE STAKED (SURVEYED) OUT BY A PROFESSIONAL SURVEYOR LICENSED IN THE STATE OF CONNECTICUT. THE SURVEY PLATES SHALL BE HOT DIPPED GALVANIZED IN ACCORDANCE WITH ASTM A153.
27. THE WATER MAIN SHALL BE BUILT BY A LICENSED PLUMBER UNDER THE SUPERVISION OF THE DISTRICT OR THEIR DESIGNEE.
28. "CALL BEFORE YOU DIG" THE CONTRACTOR IS HEREBY REMINDED THAT TITLE 16, CHAPTER 293 OF THE CONNECTICUT GENERAL STATUTES REQUIRES NOTIFICATION OF THE UTILITY COMPANIES OF PENDING EXCAVATION AT OR NEAR PUBLIC UTILITIES, THE CONTRACTOR SHALL CALL 1-900-922-4455 AT LEAST 48 HOURS PRIOR TO BEGINNING THE EXCAVATION.
29. ALL FEDERAL AND STATE OSHA SAFETY STANDARDS MUST BE FOLLOWED DURING WATER MAIN INSTALLATIONS AND TESTING, INCLUDING 29 CFR 1926.650 1926.652, THAT ADDRESS EXCAVATION WORK AND REQUIREMENTS FOR PROTECTIVE SYSTEMS.
30. TEST PITS SHALL BE DUG WELL IN ADVANCE OF THE WATER MAIN INSTALLATION TO DETERMINE POSSIBLE OFFSETS ABOVE OR BELOW OTHER UTILITIES, STRUCTURES, OR OBSTACLES, AND TO IDENTIFY ANY REQUIRED MODIFICATIONS TO THE PROPOSED HORIZONTAL AND VERTICAL OFFSETS SHOWN ON THE DRAWINGS.
31. GATE OPERATIONS FOR THIS PROJECT SHALL BE "OPEN RIGHT."
32. ALL FITTINGS, UNLESS OTHERWISE SPECIFIED, SHALL BE MECHANICAL JOINT AND SHALL BE INSTALLED WITH RESTRAINT IN EACH DIRECTION.
33. AFTER PLACING APPROXIMATELY TWO FEET (2'-0") OF BACKFILL MATERIAL OVER THE WATER MAIN, THE CONTRACTOR SHALL PLACE A SIX-INCH WIDE STRIP OF DURABLE, NON-DETECTABLE, COLOR CODED (BLUE FOR WATER) UNDERGROUND UTILITY DETECTION TAPE IMPRINTED WITH THE APPROPRIATE WARNING INDICATING THE PRESENCE OF A BURIED UTILITY CONDUIT.
34. SHOULD THE WATER MAIN FAIL TO PASS THE REQUIRED PHYSICAL, CHEMICAL, AND BIOLOGICAL PARAMETERS, THE CONTRACTOR SHALL BE RESPONSIBLE FOR REINJECTING THE WATER MAIN WITH THE PROPER QUANTITY OF LIQUID HYPOCHLORITE SOLUTION, AT NO EXPENSE TO THE DISTRICT.
35. BENEATH THE BRIDGE, ROLLER SUPPORT ASSEMBLIES SHALL BE PROVIDED A MINIMUM OF 2' AND A MAXIMUM OF 5' FROM PIPE JOINTS (ON BOTH SIDES OF PIPE JOINT). REFER TO WATER DETAILS.

LEGEND

NEW

- 195 — PROPOSED GRADING
- WATER MAIN
- GATE VALVE AND BOX
- HYDRANT
- REDUCER
- BENDS
- TEE
- TAPPING SLEEVE AND VALVE
- CAP/PLUG
- COUPLING

EXISTING

- S — D=7.65' — SEWER LINE WITH APPROXIMATE DISTANCE DOWN TO TOP OF PIPE
- W — WATER LINE
- D — D=4.55' — DRAIN LINE WITH APPROXIMATE DISTANCE DOWN TO TOP OF PIPE
- G — GAS LINE
- E — ELECTRICAL LINE
- T — TELEPHONE LINE
- OH — OVERHEAD WIRE
- LOOP DETECTOR
- HYDRANT
- UP#12 — UTILITY POLE
- TF=65.32 INV=61.22 — CATCH BASIN WITH TOP OF FRAME AND INVERT ELEVATIONS
- G — GAS MANHOLE
- D — TF=67.35 INV=64.12 — DRAIN MANHOLE WITH TOP OF FRAME AND INVERT ELEVATIONS
- S — TF=68.25 INV=59.84 — SEWER MANHOLE WITH TOP OF FRAME AND INVERT ELEVATIONS
- T — TELEPHONE MANHOLE
- HCR — HANDICAP RAMP
- GATE VALVE
- WP R=131.36 — BENCH MARK
- SIGN
- EXISTING CAP
- x 134.95 — SPOT ELEVATION
- B-1 — BORING
- T-1 — TEST PIT.

EXISTING (CON'T)

- LIMIT OF PAVED ROADS
- PROPERTY LINE
- N — NORTH ARROW
- FLOODWAY
- 100-FT UPLAND REVIEW

ABBREVIATIONS

AC	ASBESTOS CEMENT
CI	CAST IRON
DI	DUCTILE IRON
GV	GAS VALVE
WV	WATER VALVE
DMH	DRAIN MANHOLE
CB	CATCH BASIN
'C' CB	CURBED CATCH BASIN
'CL' CB	CURBLESS CATCH BASIN
SMH	SEWER MANHOLE
EC	EROSION CONTROL
NF	NOT FOUND
VCP	VITRIFIED CLAY
VT	VITRIFIED TILE (CLAY)
CONC	CONCRETE
WG	WATER GATE
BIT	BITUMINOUS
HCR	HANDICAP RAMP
RET	RETAINING
GRAN	GRANITE
LD	LOOP DETECTOR
HH	HAND HOLD
TS	TRAFFIC SIGNAL
FA	FIRE ALARM
CBL	CABLE
GG	GAS GATE
MB	MAIL BOX
SBDH	SOUTHERN BOUND DRILL HOLE
SANMH	SANITARY MANHOLE
EPLP	ELECTRIC POLE LIGHT POLE
LP	LOW PRESSURE
IP	INTERMEDIATE PRESSURE
RCP	REINFORCED CONCRETE PIPE
TS&V	TAPPING SLEEVE AND VALVE
STL	STEEL
W/C	WATERCLOSET
VIF	VERIFY IN FIELD
FF	FINISHED FLOOR

REV.	DATE	REVISION DESCRIPTION	SHEET NO.

THE INFORMATION, INCLUDING ESTIMATED QUANTITIES OF WORK, SHOWN ON THESE SHEETS IS BASED ON LIMITED INVESTIGATIONS BY THE STATE AND IS IN NO WAY WARRANTED TO INDICATE THE CONDITIONS OF ACTUAL QUANTITIES OF WORK WHICH WILL BE REQUIRED.

Plotted Date: 7/12/2017

DESIGNER/DRAFTER: LUKOVITS
CHECKED BY: EGAN
SCALE AS NOTED

STATE OF CONNECTICUT
DEPARTMENT OF TRANSPORTATION

Filename: ...\HW_MSH_220121_U-02.dgn

SIGNATURE/BLOCK:

PROJECT TITLE:
REHABILITATION OF BRIDGE NO. 00722
WEST ROCKS RD. OVER ROUTE 15

TOWN: NORWALK

DRAWING TITLE:
GENERAL NOTES AND LEGEND

PROJECT NO. 0102-0356
DRAWING NO. U-02
SHEET NO. 07.02

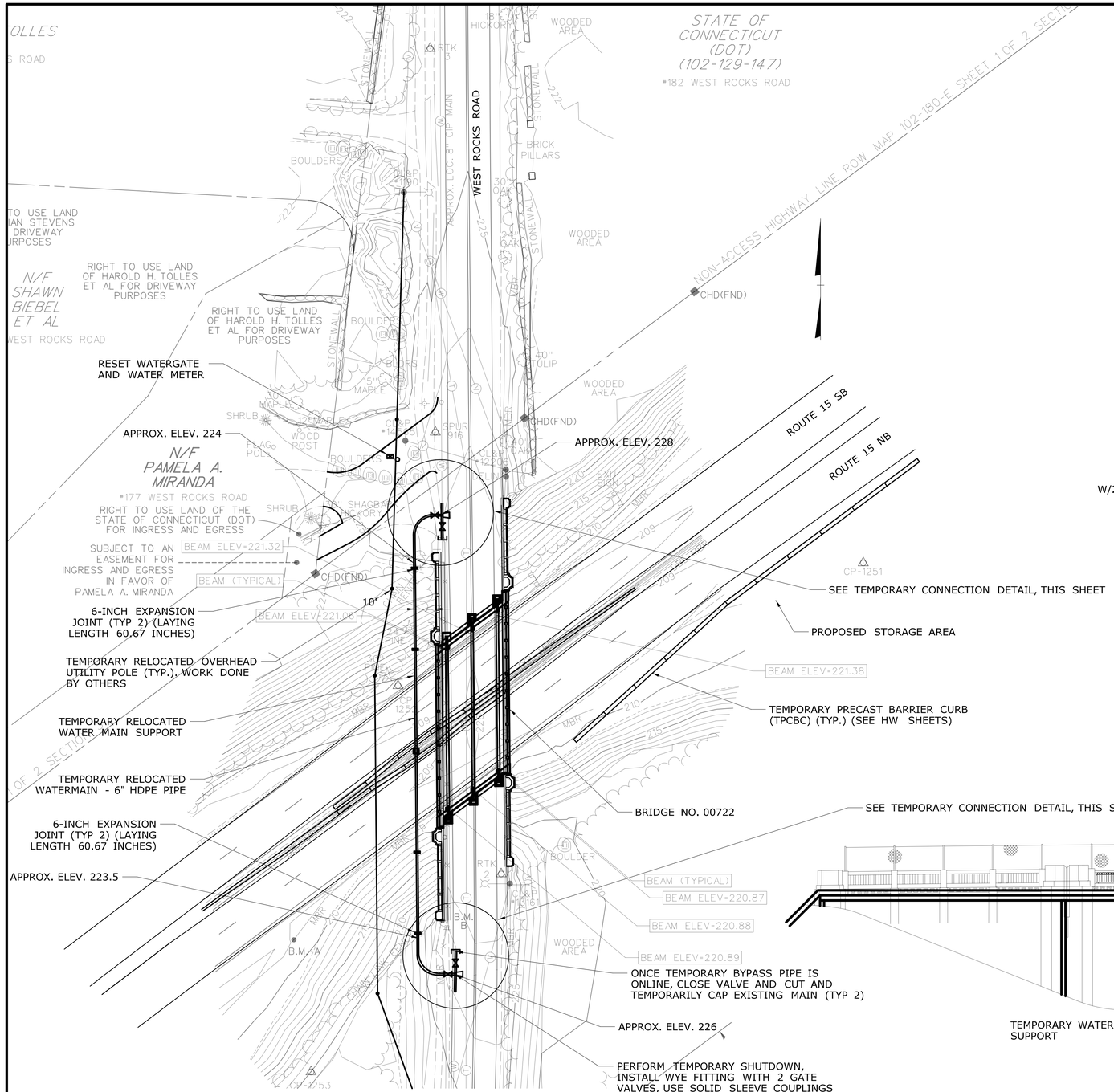

CONSTRUCTION PLAN
TEMPORARY RELOCATED WATER MAIN
SCALE: 1' = 30'

CONSTRUCTION SEQUENCE

1. PLACE TEMPORARY BARRIER ALONG MERRITT PARKWAY TO PROTECT WORK IN THE MEDIAN.
2. PLACE FOUNDATIONS FOR TEMPORARY WATER MAIN SUPPORT PIERS AT MEDIAN AND ALONG EMBANKMENTS AS REQUIRED.
3. PLACE TEMPORARY WATER MAIN SUPPORT PIERS AT MEDIAN AND ALONG EMBANKMENTS AS REQUIRED.
4. PLACE TEMPORARY WATER MAIN SUPPORT BEAMS. PLACE ROLLER SUPPORTS AS SHOWN IN DETAIL, SUPPORT LOCATIONS SHALL BE SPACED EVERY 10 FEET, MAXIMUM.
5. PLACE TEMPORARY 6 INCH DIAMETER HDPE WATER MAIN ON ROLLER SUPPORTS AND SECURE WITH U-BOLTS.
6. PLACE THRUST BLOCKS, BENDS, AND FITTINGS AS REQUIRED.
7. MAKE CONNECTION TO EXISTING WATERMAIN BY UTILIZING A WET TAP.
8. FLUSH, PRESSURE TEST, AND DISINFECT TEMPORARY WATER MAIN PRIOR TO PUTTING MAIN IN SERVICE.
9. INSTALL INSERTION VALVE AND CLOSE VALVE TO CAP EXISTING MAIN FOR CONSTRUCTION PURPOSES.

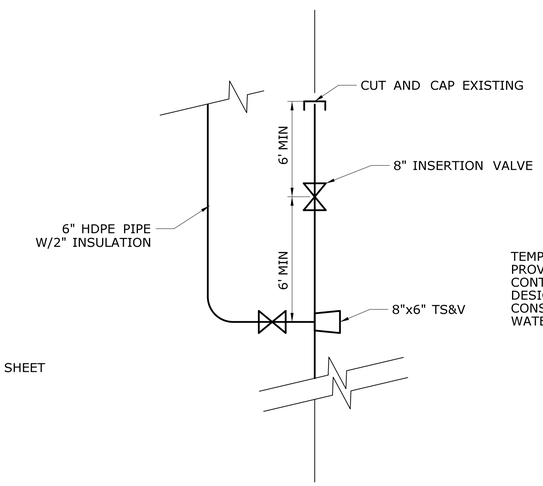

TEMPORARY WATERMAIN SUPPORT AS SHOWN, PROVIDES POSSIBLE SUPPORT ARRANGEMENT. CONTRACTOR SHALL BE RESPONSIBLE FOR THE DESIGN, DETAILING AND SUBMISSION AND CONSTRUCTION OF THE TEMPORARY WATERMAIN SUPPORT.

CONNECTION DETAIL TEMPORARY
NOT TO SCALE

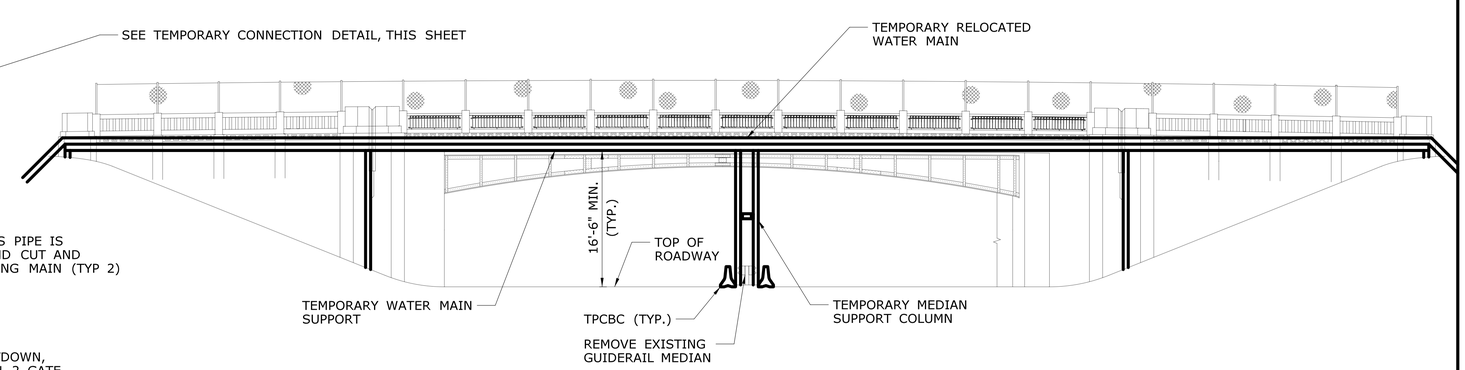

TEMPORARY WATER MAIN SUPPORT ELEVATION
SCALE: 1" = 10'

REV.	DATE	REVISION DESCRIPTION	SHEET NO.

THE INFORMATION, INCLUDING ESTIMATED QUANTITIES OF WORK, SHOWN ON THESE SHEETS IS BASED ON LIMITED INVESTIGATIONS BY THE STATE AND IS IN NO WAY WARRANTED TO INDICATE THE CONDITIONS OF ACTUAL QUANTITIES OF WORK WHICH WILL BE REQUIRED.

Plotted Date: 7/13/2017

DESIGNER/DRAFTER: LUKOVITS
CHECKED BY: EGAN
SCALE AS NOTED

STATE OF CONNECTICUT
DEPARTMENT OF TRANSPORTATION

Filename: ...\HW_MSH_220121_U-03.dgn

SIGNATURE/BLOCK:

PROJECT TITLE:
REHABILITATION OF BRIDGE NO. 00722 WEST ROCKS RD. OVER ROUTE 15

TOWN: **NORWALK**

DRAWING TITLE: **TEMPORARY RELOCATED WATERMAIN PLAN**

PROJECT NO. 0102-0356
DRAWING NO. U-03
SHEET NO. 07.03

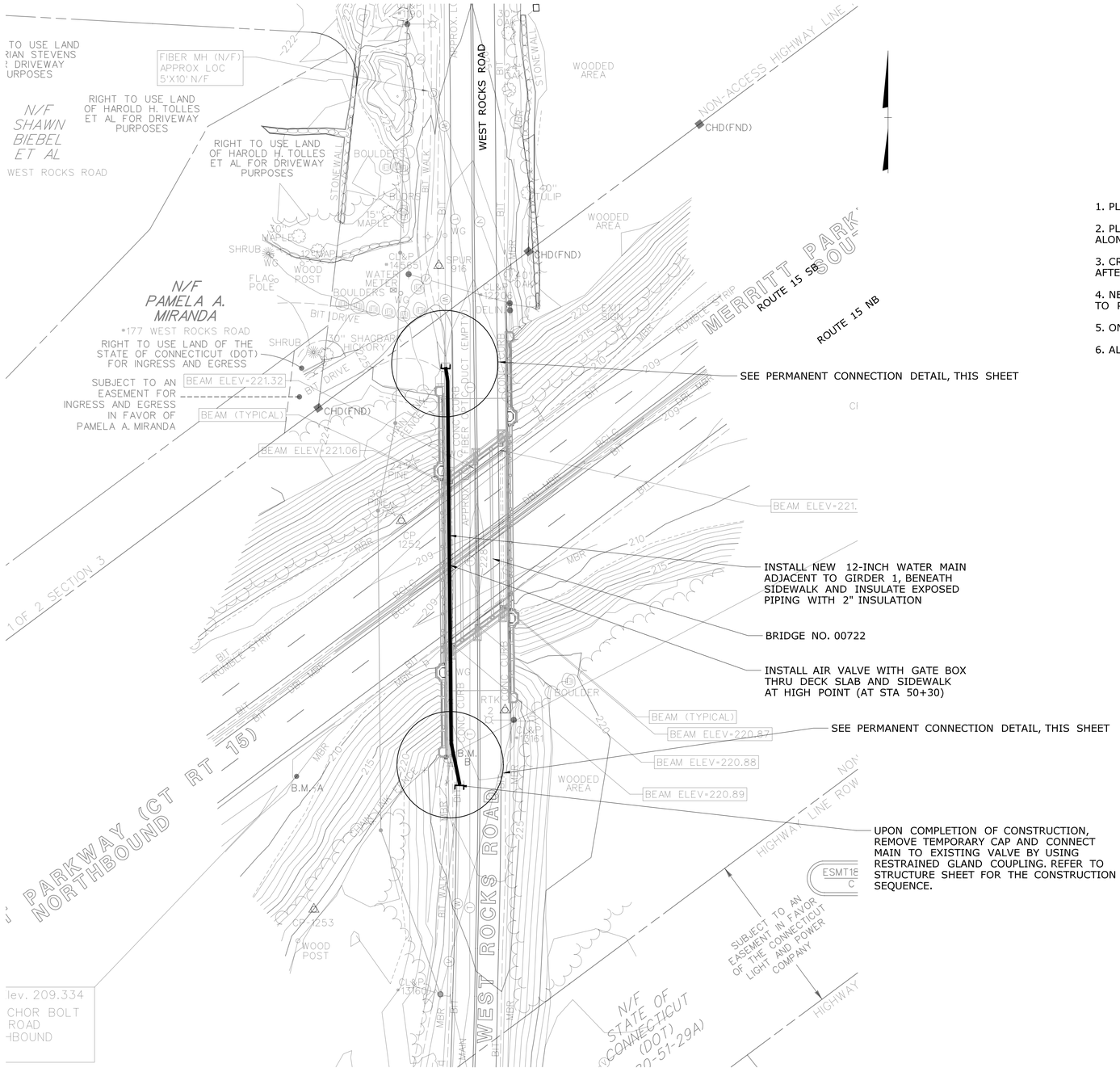

PROPOSED CONSTRUCTION PLAN STAGE 2

SCALE: 1' = 30'

CONSTRUCTION SEQUENCE GENERAL NOTES:

1. PLACE WATER MAIN SUPPORTS ON DIAGRAMS AFTER ERECTION OF STRUCTURAL STEEL.
2. PLACE NEW INSULATED 12 INCH DIAMETER HDPE PIPE WITH ALL REQUIRED FITTINGS ON SUPPORTS ALONG APPROACHES.
3. CREATE CONNECTION TO THE EXISTING WATER MAIN AFTER CLEANING TESTING, LEAVING TEMPORARY MAIN IN SERVICE.
4. NEW 12-INCH MAIN SHALL BE FLUSHED, PRESSURE TESTED, DISINFECTED, AND APPROVED PRIOR TO PLACING MAIN IN SERVICE.
5. ONCE THE NEW MAIN IS IN SERVICE REMOVE TEMPORARY PIPING AND CAP VALVE ON WYE FITTING
6. ALL TEMPORARY PIPE AND FITTINGS SHALL BE RETURNED TO NFWD STORAGE YARD FOR FUTURE USE BY NFWD

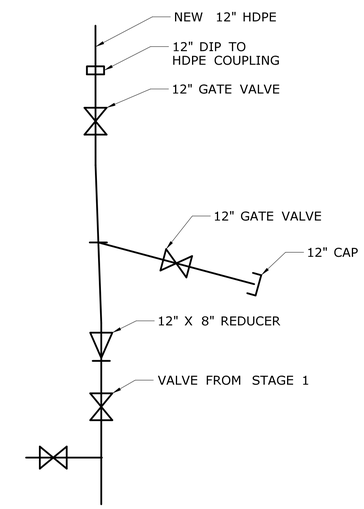

CONNECTION DETAIL PERMANENT

NOT TO SCALE

REV.	DATE	REVISION DESCRIPTION	SHEET NO.

THE INFORMATION, INCLUDING ESTIMATED QUANTITIES OF WORK, SHOWN ON THESE SHEETS IS BASED ON LIMITED INVESTIGATIONS BY THE STATE AND IS IN NO WAY WARRANTED TO INDICATE THE CONDITIONS OF ACTUAL QUANTITIES OF WORK WHICH WILL BE REQUIRED.

Plotted Date: 7/12/2017

DESIGNER/DRAFTER: LUKOVITS
CHECKED BY: EGAN
SCALE AS NOTED

STATE OF CONNECTICUT
DEPARTMENT OF TRANSPORTATION

Filename: ...\HW_MSH_220121_U-04.dgn

SIGNATURE/BLOCK:

PROJECT TITLE: REHABILITATION OF BRIDGE NO. 00722 WEST ROCKS RD. OVER ROUTE 15

TOWN: NORWALK

DRAWING TITLE: PERMANENT RELOCATED WATER MAIN PLAN

PROJECT NO. 0102-0356
DRAWING NO. U-04
SHEET NO. 07.04

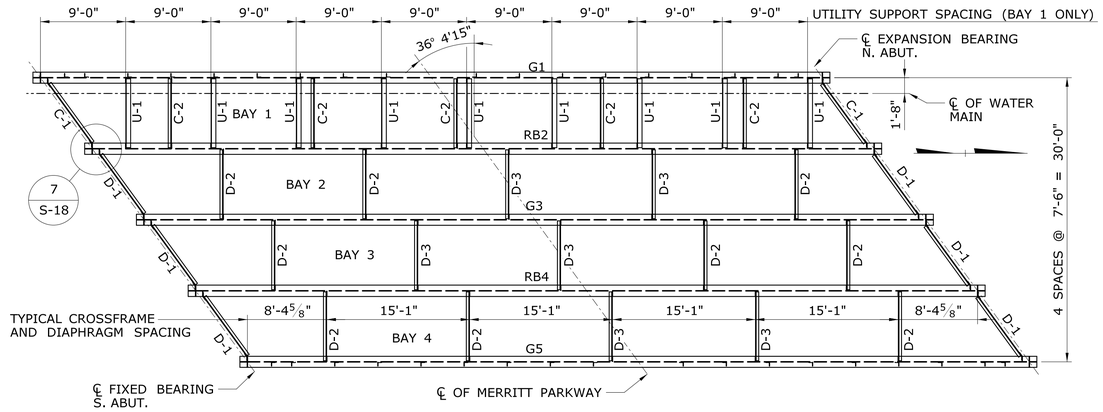

FRAMING PLAN

SCALE: 1/8" = 1'-0"

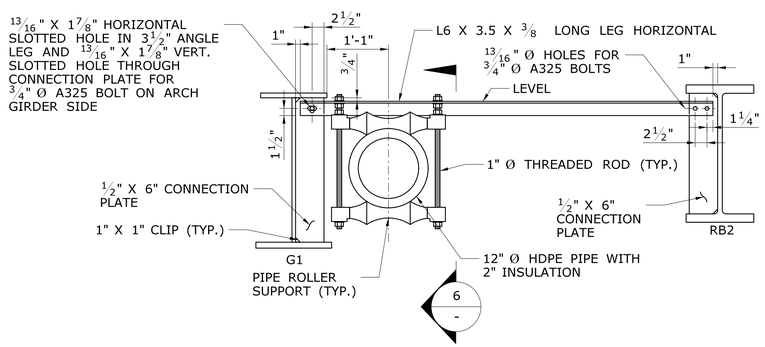

U1 - WATER MAIN SUPPORT

SCALE: 3/4" = 1'-0"

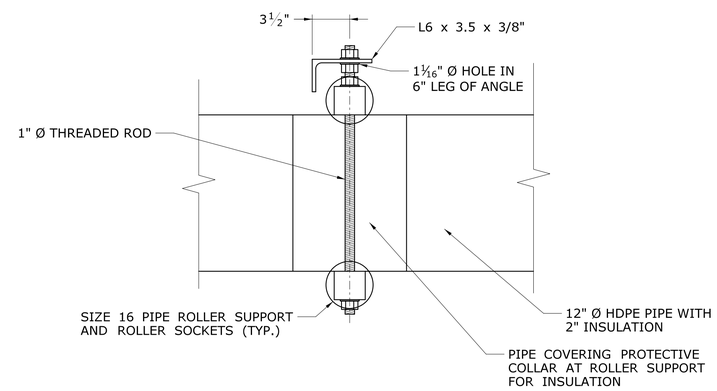

REV.	DATE	REVISION DESCRIPTION	SHEET NO.

THE INFORMATION, INCLUDING ESTIMATED QUANTITIES OF WORK, SHOWN ON THESE SHEETS IS BASED ON LIMITED INVESTIGATIONS BY THE STATE AND IS IN NO WAY WARRANTED TO INDICATE THE CONDITIONS OF ACTUAL QUANTITIES OF WORK WHICH WILL BE REQUIRED.

Plotted Date: 7/13/2017

DESIGNER/DRAFTER: LUKOVITS

CHECKED BY: EGAN

SCALE AS NOTED

STATE OF CONNECTICUT
DEPARTMENT OF TRANSPORTATION

Filename: ...\HW_MSH_220121_U-05.dgn

SIGNATURE/ BLOCK:

PROJECT TITLE:
REHABILITATION OF BRIDGE NO. 00722
WEST ROCKS RD. OVER ROUTE 15

TOWN: NORWALK

DRAWING TITLE: WATERMAIN SUPPORT DETAILS

PROJECT NO. 0102-0356

DRAWING NO. U-05

SHEET NO. 07.05

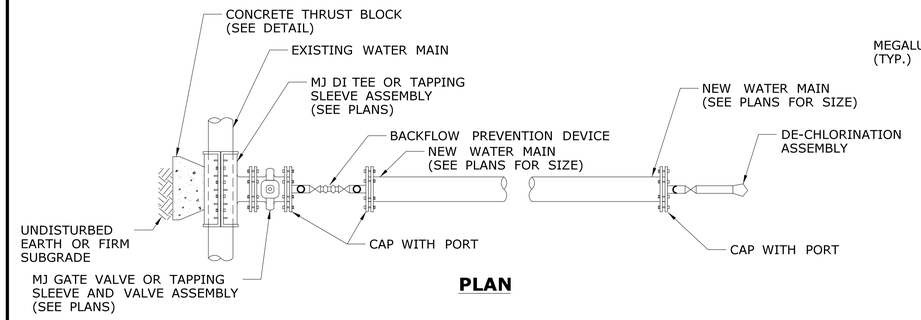

PLAN

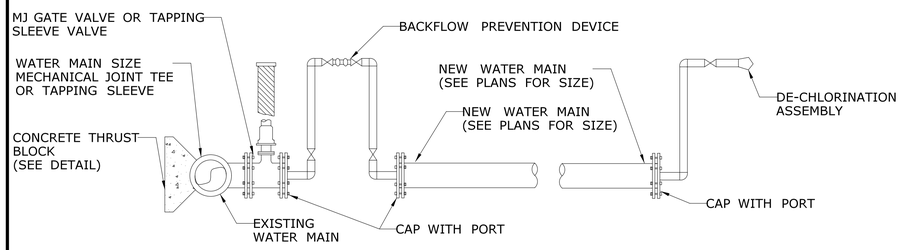

ELEVATION

STANDARD TESTING AND CHLORINATING ASSEMBLY

NOT TO SCALE

NOTES

1. BACKFLOW PREVENTION DEVICE MUST BE INSTALLED BETWEEN EXISTING WATER FACILITIES AND NEW (UNTESTED) WATER FACILITIES.

2. NEW MAIN CAN BE FILLED FOR TESTING BY CHOICE OF THE CONTRACTOR (EXISTING WATER MAIN, FIRE HYDRANT, ETC.) AND SHALL BE APPROVED BY THE ENGINEER.

3. SEE ITEM 700, IN THE FIRST TAXING DISTRICT WATER DEPARTMENT STANDARD SPECIFICATIONS, FOR DETAILS ON TESTING AND CHLORINATING OF NEW WATER MAINS.

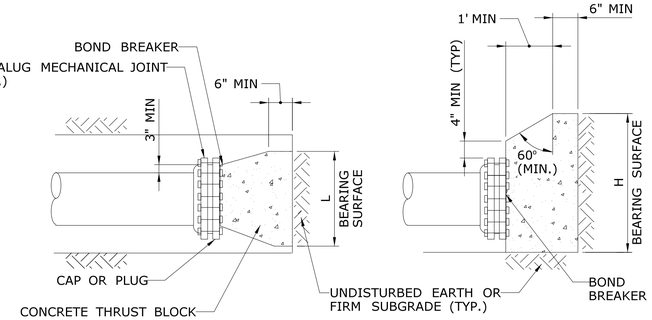

PLAN **ELEVATION**

TYPICAL CAP AND PLUG (DETAIL)

NOT TO SCALE

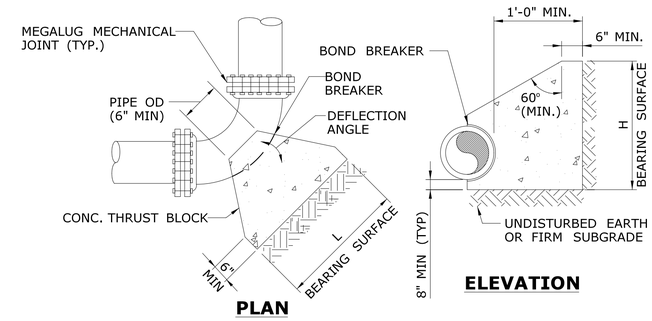

PLAN **ELEVATION**

TYPICAL THRUST BLOCK FOR BENDS

NOT TO SCALE

CONCRETE THRUST BLOCK DIMENSIONS FOR AVERAGE SOIL CONDITIONS											PAYMENT AMOUNT PER CONCRETE THRUST BLOCK					
PIPE SIZE	PLUG, CAP, TEE OR TAP SLEEVE		90° BEND		45° BEND		22 1/2° BEND		11 1/4° BEND		PIPE SIZE	PLUG, CAP, TEE OR TAP SLEEVE	90° BEND	45° BEND	22 1/2° BEND	11 1/4° BEND
	H	L	H	L	H	L	H	L	H	L						
4"	1'-0"	2'-0"	1'-0"	2'-0"	1'-0"	1'-4"	0'-9"	1'-0"	0'-6"	1'-0"*	4"	0.07CY	0.07CY	0.05CY	0.03CY	0.02CY
6"	1'-0"	2'-0"	1'-0"	2'-0"	1'-0"	1'-4"	0'-9"	1'-0"	0'-6"	1'-0"	6"	0.07CY	0.07CY	0.05CY	0.03CY	0.02CY
8"	1'-4"	2'-8"	1'-4"	2'-8"	1'-4"	1'-6"	1'-0"	1'-0"	0'-9"	1'-0"	8"	0.13CY	0.13CY	0.07CY	0.04CY	0.03CY
10"	1'-8"	3'-4"	1'-8"	3'-4"	1'-8"	2'-0"	1'-3"	1'-3"	1'-0"	1'-0"	10"	0.20CY	0.20CY	0.12CY	0.07CY	0.04CY
12"	2'-0"	4'-0"	2'-0"	4'-0"	2'-0"	2'-2"	1'-6"	1'-6"	1'-3"	1'-3"	12"	0.30CY	0.30CY	0.16CY	0.08CY	0.07CY
14"	2'-4"	4'-8"	2'-4"	4'-8"	2'-4"	2'-6"	1'-9"	1'-9"	1'-4"	1'-4"	14"	0.40CY	0.40CY	0.22CY	0.11CY	0.07CY
16"	2'-8"	5'-4"	2'-8"	5'-4"	2'-8"	3'-0"	2'-0"	2'-0"	1'-6"	1'-6"	16"	0.53CY	0.53CY	0.30CY	0.15CY	0.08CY
18"	3'-0"	6'-0"	3'-0"	6'-0"	3'-0"	3'-4"	2'-3"	2'-3"	1'-8"	1'-8"	18"	0.67CY	0.67CY	0.37CY	0.19CY	0.10CY
20"	3'-4"	6'-8"	3'-4"	6'-8"	3'-4"	3'-8"	2'-6"	2'-6"	2'-0"	2'-0"	20"	0.82CY	0.82CY	0.45CY	0.23CY	0.15CY
24"	4'-0"	8'-0"	4'-0"	8'-0"	4'-0"	4'-4"	3'-0"	3'-0"	2'-3"	2'-3"	24"	1.19CY	1.19CY	0.64CY	0.33CY	0.19CY

NOTES:
1. ALL CONCRETE THRUST BLOCKS TO BE PLACED AGAINST UNDISTURBED EARTH.
2. THRUST BLOCKS TO BE USED AT ALL FITTINGS, HYDRANTS, AND AS DIRECTED BY THE ENGINEER.
3. FIELD LOC GASKETS MAY BE REQUIRED TO BE INSTALLED PER THE ENGINEER'S DIRECTION.

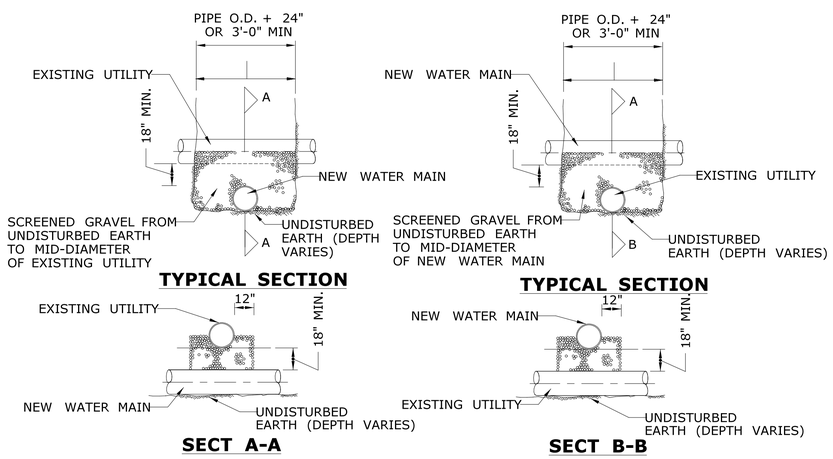

TYPICAL SECTION **TYPICAL SECTION**

SECT A-A **SECT B-B**

UTILITY CROSSING DETAIL

NOT TO SCALE

NOTES:
1. USE ABOVE DETAIL WHEN 4.5' MIN. COVER OVER NEW WATER MAIN CANNOT BE ACHIEVED/MAINATAINED VERIFY WITH ENGINEER PRIOR TO WATERMAIN INSTALLATION.
2. PROVIDE CONCRETE ENCASEMENT WHERE 18" MINIMUM SEPERATION CANNOT BE MAINTAINED, OR AS DIRECTED BY THE ENGINEER.
3. PLEASE REFER TO STATE OF CONNNECTICUT DEPARTMENT OF PUBLIC HEALTH DRINKING WATER SECTION, WATER MAIN DESIGN AND CONSTRUCION GUIDLINES" STANDARDS WHEN CROSSING A UTILITY, OR AS DIRECTED BY THE ENGINEER.

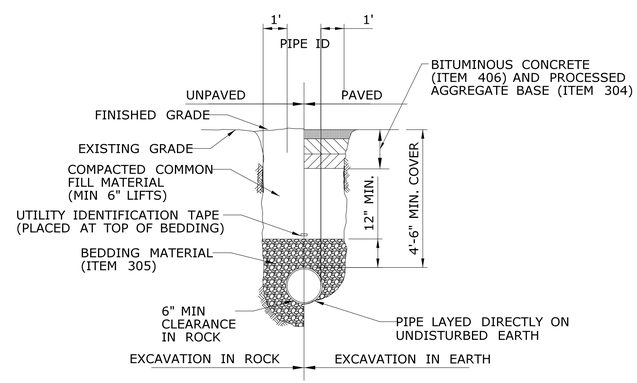

TYPICAL HDPE WATER MAIN TRENCH DETAIL

NOT TO SCALE

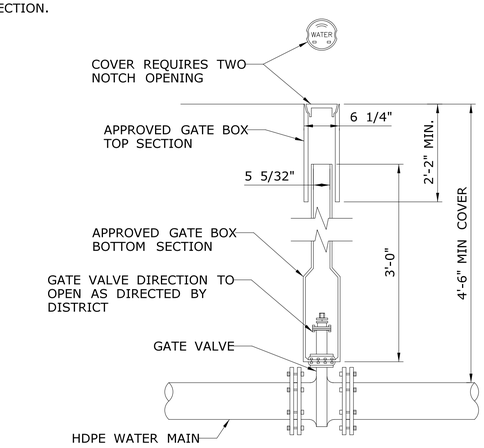

TYPICAL GATE BOX

NOT TO SCALE

NOTES:

1. INSULATE FOR MAINS/GATES 12" AND SMALLER.

REV.	DATE	REVISION DESCRIPTION	SHEET NO.

THE INFORMATION, INCLUDING ESTIMATED QUANTITIES OF WORK, SHOWN ON THESE SHEETS IS BASED ON LIMITED INVESTIGATIONS BY THE STATE AND IS IN NO WAY WARRANTED TO INDICATE THE CONDITIONS OF ACTUAL QUANTITIES OF WORK WHICH WILL BE REQUIRED.

Plotted Date: 7/12/2017

DESIGNER/DRAFTER: LUKOVITS
CHECKED BY: EGAN
SCALE AS NOTED

STATE OF CONNECTICUT
DEPARTMENT OF TRANSPORTATION

Filename: ...\HW_MSH_220121_U-06.dgn

SIGNATURE/BLOCK:

PROJECT TITLE:
REHABILITATION OF BRIDGE NO. 00722
WEST ROCKS RD. OVER ROUTE 15

TOWN: NORWALK

DRAWING TITLE: MISCELLANEOUS DETAILS

PROJECT NO. 0102-0356
DRAWING NO. U-06
SHEET NO. 07.06

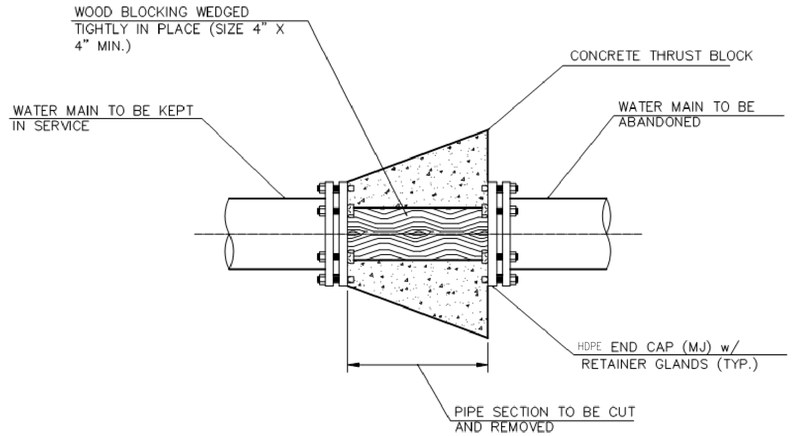

CUT AND CAP PIPE

NOT TO SCALE

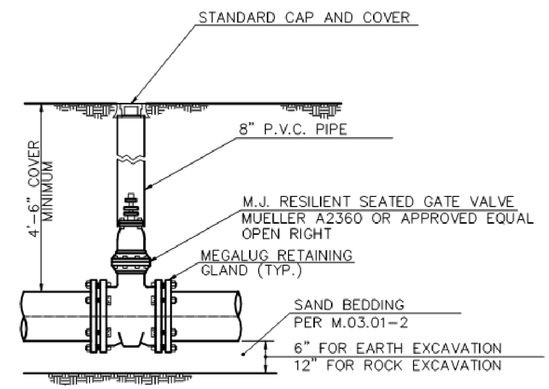

GATE VALVE

NOT TO SCALE

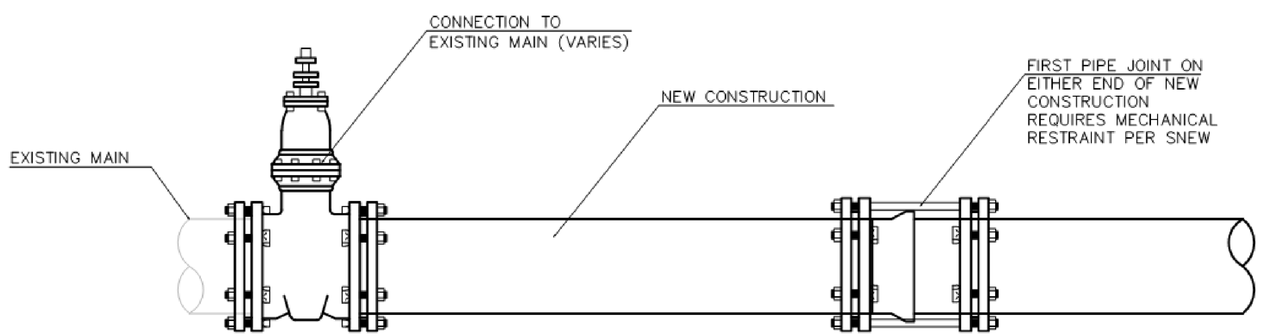

PIPE JOINT RESTRAINT

NOT TO SCALE

REV.	DATE	REVISION DESCRIPTION	SHEET NO.

THE INFORMATION, INCLUDING ESTIMATED QUANTITIES OF WORK, SHOWN ON THESE SHEETS IS BASED ON LIMITED INVESTIGATIONS BY THE STATE AND IS IN NO WAY WARRANTED TO INDICATE THE CONDITIONS OF ACTUAL QUANTITIES OF WORK WHICH WILL BE REQUIRED.

Plotted Date: 7/12/2017

DESIGNER/DRAFTER: LUKOVITS

CHECKED BY: EGAN

SCALE AS NOTED

STATE OF CONNECTICUT
DEPARTMENT OF TRANSPORTATION

Filename: ...\HW_MSH_220121_U-07.dgn

SIGNATURE/ BLOCK:

PROJECT TITLE:
REHABILITATION OF BRIDGE NO. 00722
WEST ROCKS RD. OVER ROUTE 15

TOWN: NORWALK

DRAWING TITLE: MISCELLANEOUS DETAILS

PROJECT NO. 0102-0356

DRAWING NO. U-07

SHEET NO. 07.07