05 - STRUCTURES SUBSET
INDEX OF DRAWINGS

DRAWING NUMBER	DRAWING TITLE
S-1	**INDEX OF DRAWINGS**
S-2	**MAST ARM ASSEMBLY ELEVATION**
S-3	**MAST ARM ASSEMBLY DETAILS**
S-4	**MAST ARM ASSEMBLY FOUNDATION DETAILS**

THE DESIGN APPEARS TO CONFORM TO APPLICABLE CRITERIA. APPROVAL IS NOT TO BE CONSTRUED TO MEAN THAT ALL APPROVAL ASPECTS OF THE DESIGN HAVE BEEN PERSONALLY CHECKED BY THE UNDERSIGNED.

Mary E. Baker, P.E.
2017.06.16
11:18:43-04'00'

TRANSPORTATION PRINCIPAL ENGINEER

REV.	DATE	REVISION DESCRIPTION	SHEET NO.

THE INFORMATION, INCLUDING ESTIMATED QUANTITIES OF WORK, SHOWN ON THESE SHEETS IS BASED ON LIMITED INVESTIGATIONS BY THE STATE AND IS IN NO WAY WARRANTED TO INDICATE THE CONDITIONS OF ACTUAL QUANTITIES OF WORK WHICH WILL BE REQUIRED.

Plotted Date: 6/13/2017

DESIGNER/DRAFTER: **JFG**
CHECKED BY: **BKC**
SCALE AS NOTED

STATE OF CONNECTICUT
DEPARTMENT OF TRANSPORTATION

Filename: ...\0172-435 & 436_SB_IndexOfDrawings-S1.dgn

SIGNATURE/ BLOCK:
OFFICE OF ENGINEERING
APPROVED BY:

PROJECT TITLE:
INSTALLATION AND REVISION OF TRAFFIC CONTROL SIGNALS IN DISTRICTS 1 & 2

TOWN: **VARIES**

DRAWING TITLE: **INDEX OF DRAWINGS**

PROJECT NO. **172-435 172-436**
DRAWING NO. **S-1**
SHEET NO. **04.01**

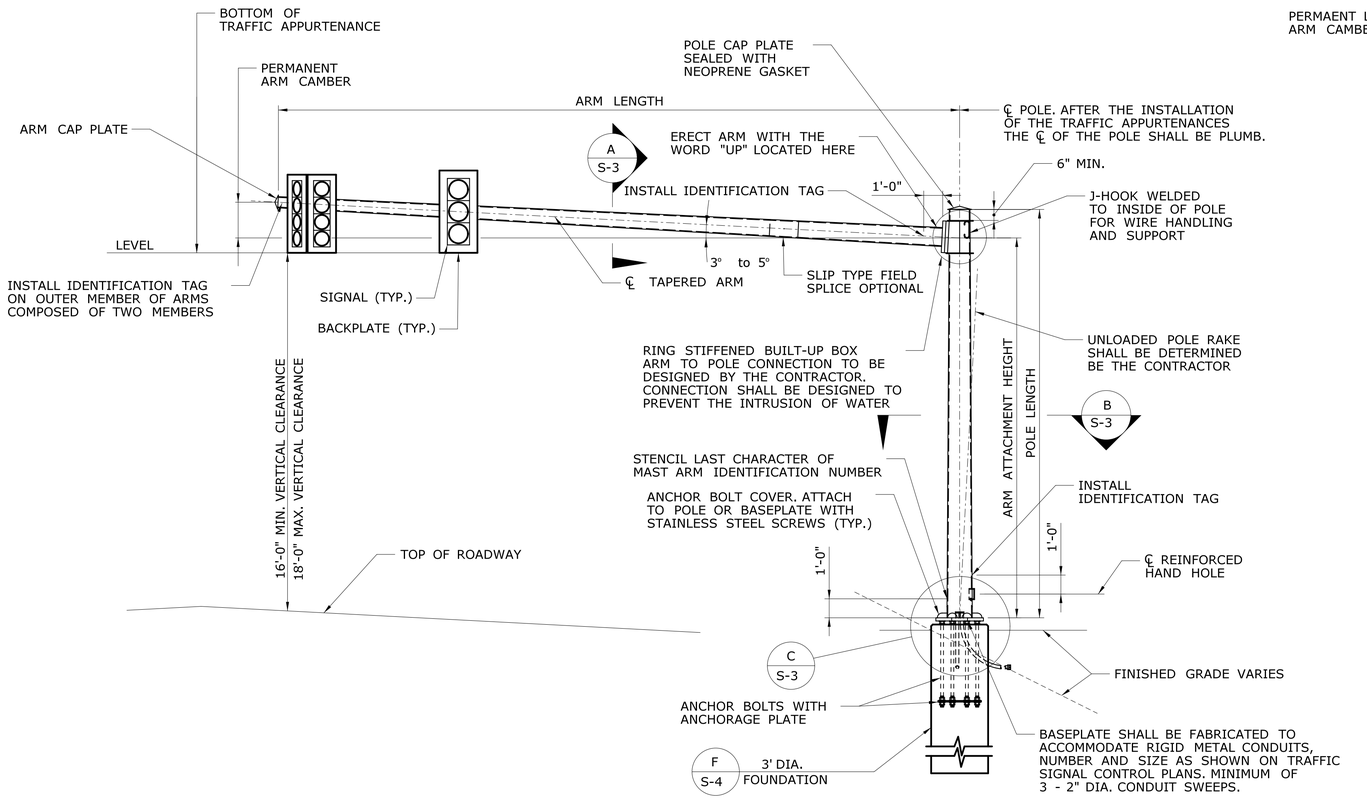

ELEVATION
MAST ARM
SCALE: ¼" = 1'-0"

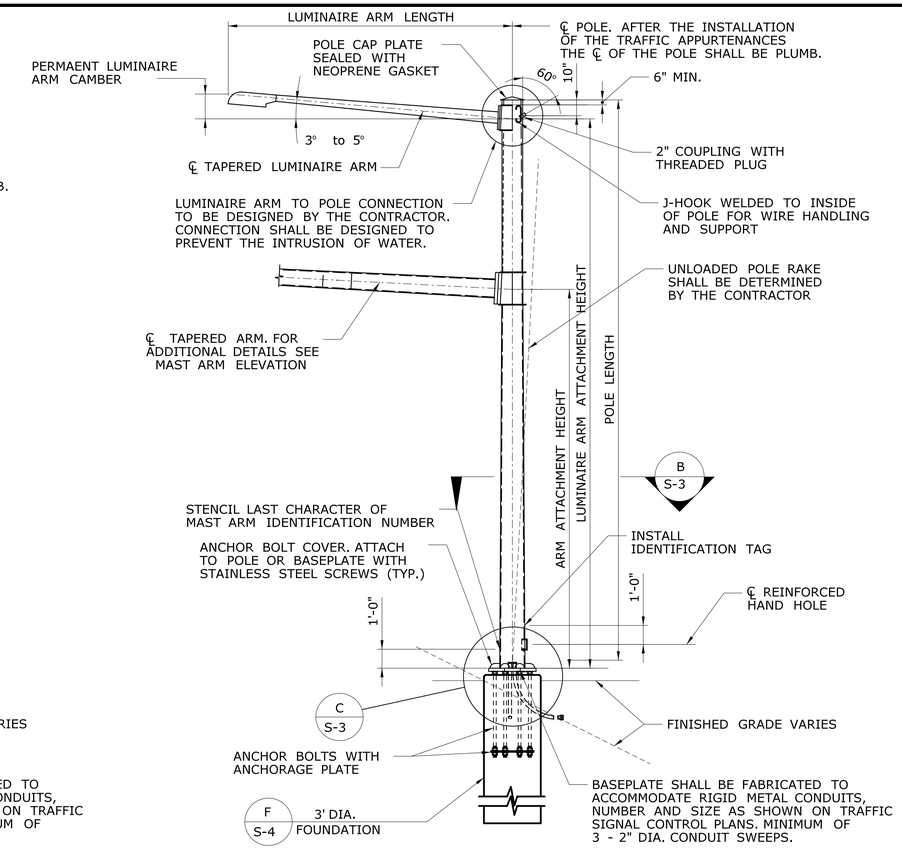

ELEVATION
COMBINATION MAST ARM
SCALE: ¼" = 1'-0"

MAST ARM WORKING DRAWING NOTES

STRUCTURAL PLATE COMPONENTS, SUCH AS THE BASE PLATES, ANCHORAGE PLATES, AND HANDHOLE FRAMES SHALL CONFORM TO THE REQUIREMENTS OF ASTM A572, GRADE 50.

STEEL FOR POLE MEMBERS AND STRUCTURAL PLATE COMPONENTS SHALL MEET CHARPY V-NOTCH IMPACT TESTING REQUIREMENTS IN ACCORDANCE WITH AASHTO T243.

ALL HIGH STRENGTH BOLTS SHALL CONFORM TO ASTM A325, TYPE 1. NUTS SHALL CONFORM TO ASTM A563, GRADE DH. CIRCULAR, FLAT, HARDENED STEEL WASHERS SHALL CONFORM TO ASTM F436. THE BOLTS, NUTS, AND WASHERS SHALL BE GALVANIZED IN ACCORDANCE WITH ASTM F2329 OR ASTM B695, CLASS 55. THE HIGH STRENGTH BOLTS SHALL CONFORM TO THE REQUIREMENTS OF SUB ARTICLE M.06.02-3. ANCHOR BOLTS SHALL CONFORM TO ASTM F1554, GRADE 105.

NEOPRENE GASKET MATERIAL AND CLOSED CELL REASONER SHALL CONFORM TO ASTM D1056, GRADE 2A2 OR 2A3.

THE SPAN WIRE POLE CLAMP SHALL BE DESIGNED TO SUPPORT A MINIMUM TENSILE FORCE OF 12,000 POUNDS OR 3 TIMES THE MAXIMUM CALCULATED TENSILE FORCE IN THE SPAN WIRE, WHICHEVER IS GREATER.

VENT AND DRAIN HOLES SHALL BE PROVIDED FOR GALVANIZING. THE NUMBER, SIZE, AND LOCATION OF VENT AND DRAIN HOLES SHALL BE COORDINATED WITH THE GALVANIZER PRIOR TO SUBMISSION OF THE WORKING DRAWINGS AND DESIGN CALCULATIONS.

MAST ARM ASSEMBLY NOTES

THE MAST ARM, INCLUDING THE ANCHORAGE TO THE FOUNDATION, SHALL BE DESIGNED, FABRICATED AND INSTALLED BY THE CONTRACTOR, OF THE SPAN SPECIFIED, IN ACCORDANCE WITH THE SPECIAL PROVISION "XX STEEL MAST ARM ASSEMBLY" OR "XX STEEL COMBINATION MAST ARM ASSEMBLY".

THE DIMENSIONS OF THE MAST ARM ASSEMBLY AND DETAILS OF THE TRAFFIC APPURTENANCES SUPPORTED BY THE MAST ARM ASSEMBLY ARE SHOWN ON THE TRAFFIC SIGNAL PLANS, ELEVATIONS, CROSS-SECTIONS OR IN THE SPECIAL PROVISIONS. THE ARM AND POLE LENGTHS AND THE ATTACHMENT HEIGHTS SHALL BE VERIFIED BY THE CONTRACTOR BASED ON THE FINISHED GRADE AT THE SITE, TOP OF FOUNDATION ELEVATION, THE LOCATIONS OF OVERHEAD UTILITY CABLES AND THE TRAFFIC APPURTENANCE MOUNTING HEIGHTS. IF EITHER THE ARM OR POLE LENGTH IS INADEQUATE, THE CONTRACTOR SHALL NOTIFY THE ENGINEER.

THE MAST ARMS SHALL BE DESIGNED IN ACCORDANCE WITH THE LATEST EDITION OF THE AASHTO STANDARD SPECIFICATIONS FOR STRUCTURAL SUPPORTS FOR HIGHWAY SIGNS, LUMINAIRES AND TRAFFIC SIGNALS, INCLUDING THE LATEST INTERIM SPECIFICATIONS, AS AMENDED BY THE AS SPECIAL PROVISION "XX STEEL MAST ARM ASSEMBLY" OR "XX STEEL COMBINATION MAST ARM ASSEMBLY". THE MAST ARM SHALL BE DESIGNED FOR THE LOAD EFFECTS DUE TO THE ACTUAL TRAFFIC APPURTENANCES (SIGNALS, SIGNS, LUMINAIRES, CAMERAS, ETC.). THE MAST ARMS SHALL ALSO BE DESIGNED FOR THE EFFECTS OF TRAFFIC APPURTENANCES DURING ALL STAGES OF CONSTRUCTION THAT MAY EXIST DURING THE PROJECT UNDER WHICH THE MAST ARMS ARE INSTALLED.

THE MAST ARMS SHALL BE DESIGNED TO SUPPORT TRAFFIC APPURTENANCES WITH PROPERTIES NO LESS THAN THOSE SHOWN IN THE TABLE ENTITLED "TRAFFIC APPURTENANCE PROPERTIES - MINIMUM DESIGN VALUES".

REV.	DATE	REVISION DESCRIPTION	SHEET NO.

THE INFORMATION, INCLUDING ESTIMATED QUANTITIES OF WORK, SHOWN ON THESE SHEETS IS BASED ON LIMITED INVESTIGATIONS BY THE STATE AND IS IN NO WAY WARRANTED TO INDICATE THE CONDITIONS OF ACTUAL QUANTITIES OF WORK WHICH WILL BE REQUIRED.

Plotted Date: 6/13/2017

DESIGNER/DRAFTER: JFG
CHECKED BY: BKC
SCALE AS NOTED

STATE OF CONNECTICUT
DEPARTMENT OF TRANSPORTATION

Filename: ...\0172-435 & 436_SB_MastArm_S2_Elev.dgn

SIGNATURE/BLOCK: OFFICE OF ENGINEERING
APPROVED BY: Mary E Buck
DATE:

PROJECT TITLE: INSTALLATION AND REVISION OF TRAFFIC CONTROL SIGNALS IN DISTRICTS 1 & 2

TOWN: VARIES

DRAWING TITLE: MAST ARM ASSEMBLY ELEVATION

PROJECT NO. 172-435 172-436
DRAWING NO. S-2
SHEET NO. 04.02

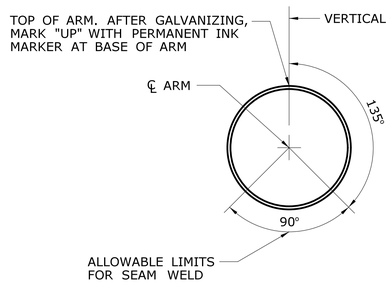

SECTION A / S-2
SCALE: 1½" = 1'-0"

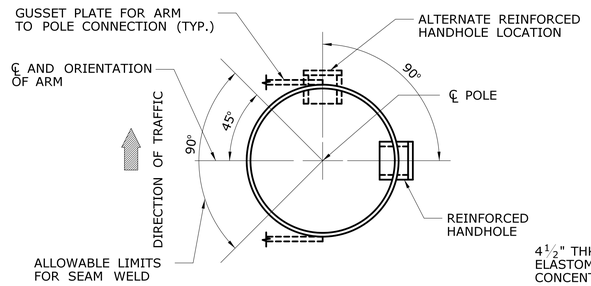

POLE WITH 1 SEAM WELD

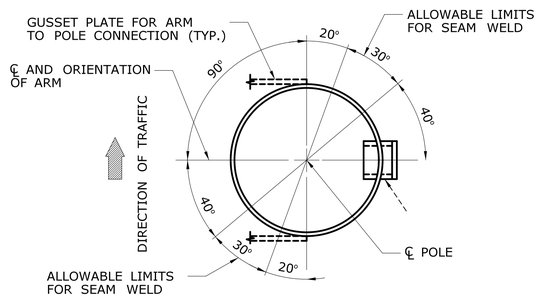

POLE WITH 2 SEAM WELDS

SECTION B / MA-1
SCALE: 1½" = 1'-0"

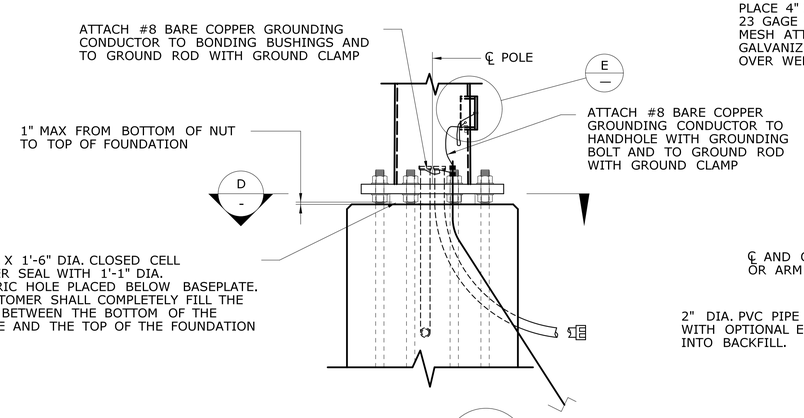

SECTION C / S-2
SCALE: ¾"=1'-0"

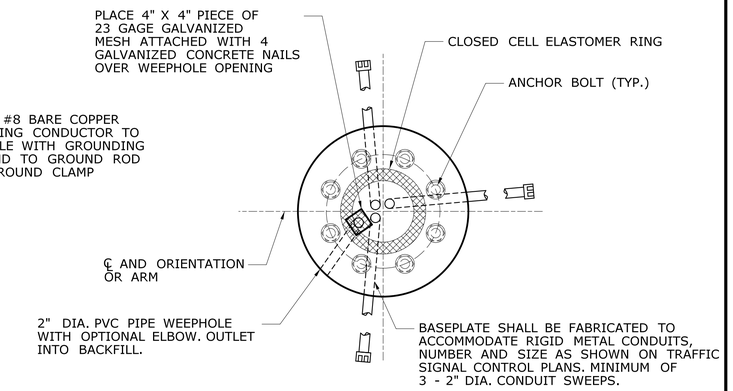

SECTION D / —
SCALE: ¾"=1'-0"

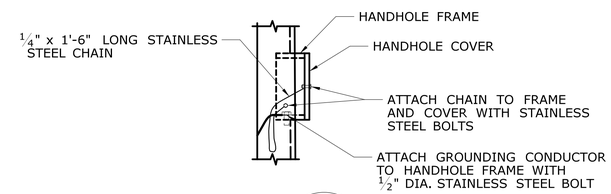

DETAIL E / —
SCALE: 1½" = 1'-0"

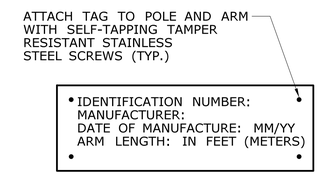

IDENTIFICATION TAG
NTS

TRAFFIC APPURTENANCE PROPERTIES
MINIMUM DESIGN VALUES

	2'-0" / 4'-4" 3 SECTION , 12" DIA. TRAFFIC SIGNAL W/ BACKPLATE	2'-0" / 5'-6" 4 SECTION , 12" DIA. TRAFFIC SIGNAL W/BACKPLATE	2'-0" / 6'-8" 5 SECTION , 12" DIA.TRAFFIC SIGNAL W/ BACKPLATE	3'-2" / 4'-4" 5 SECTION , 12" DIA.TRAFFIC SIGNAL W/ BACKPLATE	WIDTH / HEIGHT SHEET ALUMINUM SIGN PANEL
WEIGHT, INCLUDING MOUNTING HARDWARE	65 LBS	80 LBS	95 LBS	105 LBS	4 LBS/SQ.FT.
TOTAL SURFACE AREA	28.04 SQ. FT.	35.46 SQ. FT.	45.16 SQ. FT.	41.04 SQ. FT.	BASED ON PANEL DIMENSIONS
PROJECTED AREA, FRONT FACE	8.62 SQ. FT.	10.91 SQ. FT.	13.34 SQ. FT.	13.72 SQ. FT.	BASED ON PANEL DIMENSIONS
PROJECTED AREA, BOTTOM FACE	1.18 SQ. FT.	1.18 SQ. FT.	1.18 SQ. FT.	2.58 SQ. FT.	BASED ON PANEL DIMENSIONS

NOTES:

THE TABULATED VALUES ARE THE MINIMUM VALUES THAT SHALL BE USED FOR THE DESIGN.

MAST ARMS SHALL BE DESIGNED ASSUMING ALL TRAFFIC SIGNALS ARE COMPOSED OF 12" DIAMETER SECTIONS WITH BACKPLATES.

THE PROJECTED FRONT FACE AREA IS IN A PLANE PARALLEL TO THE PLANE FORMED BY THE ARM AND THE POLE.

IF MULTIPLE APPURTENANCES ARE ATTACHED AT THE SAME LOCATION, THE MINIMUM DESIGN VALUE SHALL BE NO LESS THAN THE SUM OF THE CORRESPONDING TRAFFIC APPURTENANCE PROPERTIES.

FOR TRAFFIC APPURTENANCES NOT SHOWN, THE PROPERTIES SHALL BE DETERMINED BY THE CONTRACTOR AND SUBMITTED FOR REVIEW WITH THE WORKING DRAWING SUBMITTAL.

REV.	DATE	REVISION DESCRIPTION	SHEET NO.

THE INFORMATION, INCLUDING ESTIMATED QUANTITIES OF WORK, SHOWN ON THESE SHEETS IS BASED ON LIMITED INVESTIGATIONS BY THE STATE AND IS IN NO WAY WARRANTED TO INDICATE THE CONDITIONS OF ACTUAL QUANTITIES OF WORK WHICH WILL BE REQUIRED.

Plotted Date: 6/13/2017

DESIGNER/DRAFTER: JFG
CHECKED BY: BKC
SCALE AS NOTED

STATE OF CONNECTICUT
DEPARTMENT OF TRANSPORTATION

Filename: ...\0172-435 & 436_SB_MastArm_S3_Details.dgn

SIGNATURE/BLOCK: OFFICE OF ENGINEERING
APPROVED BY: DATE:

PROJECT TITLE: INSTALLATION AND REVISION OF TRAFFIC CONTROL SIGNALS IN DISTRICTS 1 & 2

TOWN: VARIES

DRAWING TITLE: MAST ARM ASSEMBLY DETAILS

PROJECT NO. 172-435 172-436
DRAWING NO. S-3
SHEET NO. 04.03

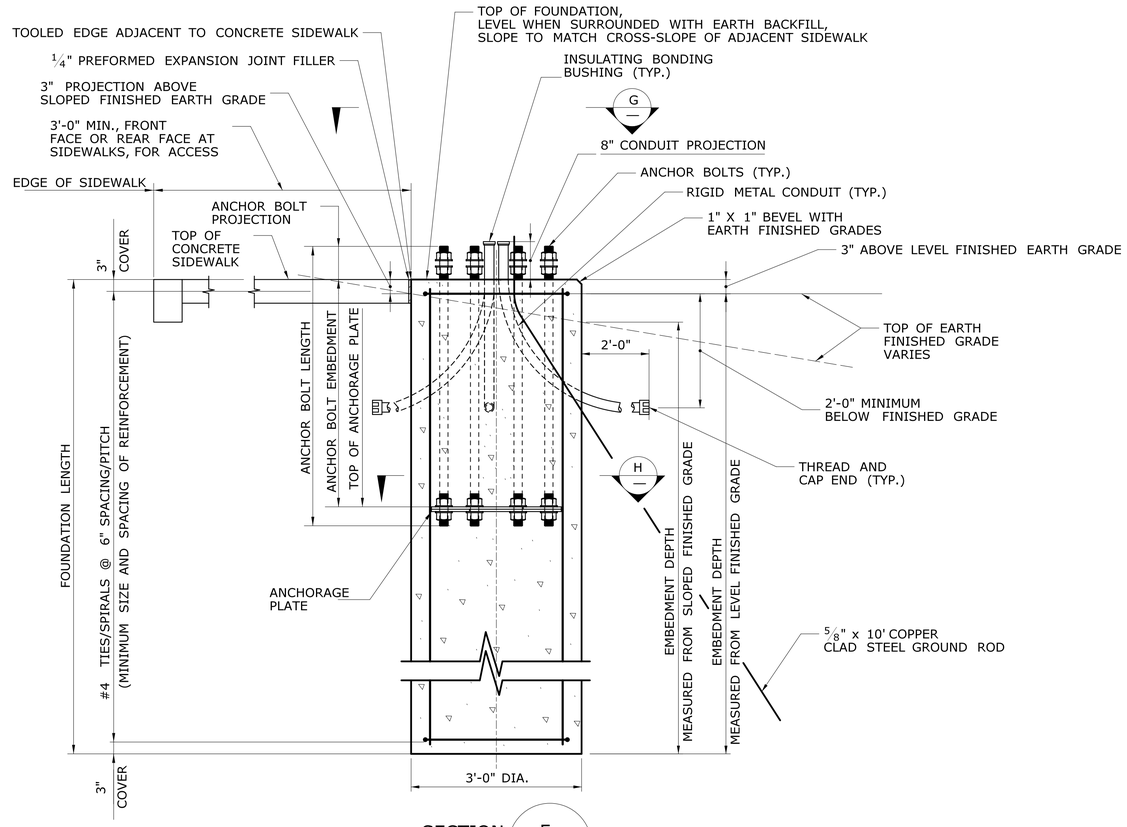

SECTION F
SCALE: 3/4"=1'-0"
S-2

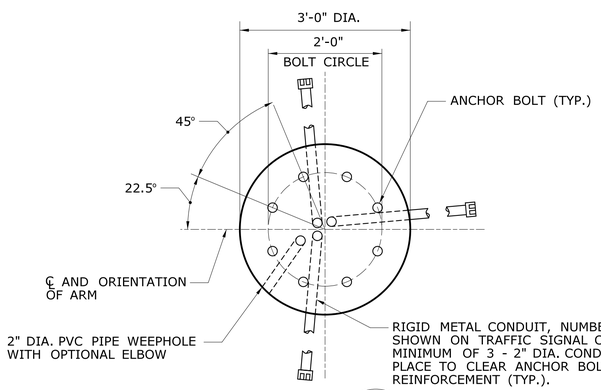

SECTION G
SCALE: 3/4"=1'-0"

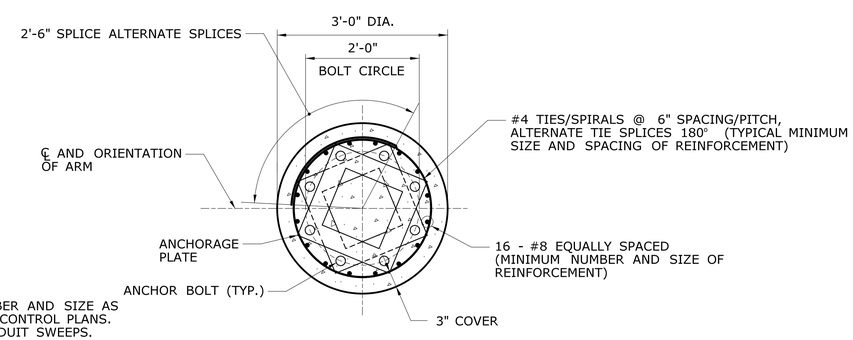

SECTION H
Scale: 3/4"=1'-0"

FOUNDATION NOTES

THE DRILLED SHAFT FOUNDATION FOR THE MAST ARM ASSEMBLY SHALL BE DESIGNED, FABRICATED, AND CONSTRUCTED BY THE CONTRACTOR IN ACCORDANCE WITH THE SPECIAL PROVISION "TRAFFIC CONTROL FOUNDATION - MAST ARM".

THE FOUNDATION SHALL BE DESIGNED FOR THE SOILS AND ROCK PROPERTIES BASED ON THE SUBSURFACE CONDITIONS (CHARACTER OF THE SOIL AND ROCK, PRESENCE OF GROUND WATER, ETC.) IN THE LOCATION OF, ADJACENT TO AND BELOW THE DRILLED SHAFT FOUNDATION EXCAVATION. THE NEED AND EXTENT OF ALL SUBSURFACE EXPLORATIONS AND INVESTIGATIONS SHALL BE DETERMINED BY THE CONTRACTOR.

THE DESIGN OF THE FOUNDATION SHALL BE COORDINATED WITH THE MAST ARM ASSEMBLY AND THE MAST ARM ANCHORAGE TO ENSURE THAT THE FOUNDATION IS ADEQUATE FOR THE MAST ARM REACTIONS AND TO AVOID CONFLICTS BETWEEN THE EMBEDDED MAST ARM ANCHORAGE AND THE FOUNDATION REINFORCEMENT.

THE CONCRETE FOR THE FOUNDATION SHALL CONFORM TO CLASS "F" CONCRETE. THE MINIMUM 28 DAY COMPRESSIVE STRENGTH OF THE CONCRETE IN THE CONSTRUCTED FOUNDATION SHALL BE 4,400 PSI.

THE REINFORCEMENT SHALL BE UNCOATED AND CONFORM TO ASTM A615, GRADE 60 (ASTM A615M, GRADE 420). THE REINFORCEMENT SHALL BE ASSEMBLED WITH WIRE TIES. WELDING TO ASSEMBLE REINFORCEMENT IS NOT PERMITTED. ALL REINFORCEMENT SHALL HAVE 3" COVER, UNLESS OTHERWISE NOTED.

THE CONCRETE SHALL BE PLACED IN THE EXCAVATION AGAINST UNDISTRURBED EARTH.

THE MAST ARM SHALL NOT BE ERECTED ON THE FOUNDATION UNTIL THE CONCRETE HAS ATTAINED A 28 DAY COMPRESSIVE STRENGTH, f'_c, GREATER THAN OR EQUAL TO 4000 PSI.

THE COST OF THE FOUNDATION, INCLUDING THE EXCAVATION, CONCRETE AND REINFORCEMENT, INCLUDING THE DESIGN AND FABRICATION, SHALL BE PAID FOR UNDER THE ITEM "TRAFFIC CONTROL FOUNDATION - MAST ARM".

REV.	DATE	REVISION DESCRIPTION	SHEET NO.

THE INFORMATION, INCLUDING ESTIMATED QUANTITIES OF WORK, SHOWN ON THESE SHEETS IS BASED ON LIMITED INVESTIGATIONS BY THE STATE AND IS IN NO WAY WARRANTED TO INDICATE THE CONDITIONS OF ACTUAL QUANTITIES OF WORK WHICH WILL BE REQUIRED.

Plotted Date: 6/13/2017

DESIGNER/DRAFTER: JFG
CHECKED BY: BKC
SCALE AS NOTED

STATE OF CONNECTICUT
DEPARTMENT OF TRANSPORTATION

Filename: ...\0172-435 & 436_SB_MastArm_S4_FndDetails.dgn

SIGNATURE/BLOCK: OFFICE OF ENGINEERING
APPROVED BY: DATE:

PROJECT TITLE: INSTALLATION AND REVISION OF TRAFFIC CONTROL SIGNALS IN DISTRICTS 1 & 2

TOWN: VARIES

DRAWING TITLE: MAST ARM ASSEMBLY FOUNDATION DETAILS

PROJECT NO. 172-435 172-436
DRAWING NO. S-4
SHEET NO. 04.04