Ø4 - STRUCTURES SUBSET

INDEX OF DRAWINGS

DRAWING NUMBER	DRAWING TITLE
S-1	**INDEX OF DRAWINGS**
S-2	**STEEL SPAN POLE ELEVATION**
S-3	**STEEL SPAN POLE DETAILS**
S-4	**STEEL SPAN POLE FOUNDATION DETAILS**

THE DESIGN APPEARS TO CONFORM TO APPLICABLE CRITERIA. APPROVAL IS NOT TO BE CONSTRUED TO MEAN THAT ALL ASPECTS OF THE DESIGN HAVE BEEN PERSONALLY CHECKED BY THE UNDERSIGNED.

Mary E. Baker, P.E.
2017.06.16 11:02:02-04'00'

TRANSPORTATION PRINCIPAL ENGINEER

REV.	DATE	REVISION DESCRIPTION	SHEET NO.

THE INFORMATION, INCLUDING ESTIMATED QUANTITIES OF WORK, SHOWN ON THESE SHEETS IS BASED ON LIMITED INVESTIGATIONS BY THE STATE AND IS IN NO WAY WARRANTED TO INDICATE THE CONDITIONS OF ACTUAL QUANTITIES OF WORK WHICH WILL BE REQUIRED.

Plotted Date: 6/13/2017

DESIGNER/DRAFTER: **JFG**

CHECKED BY:BKC **BKC**

SCALE AS NOTED

STATE OF CONNECTICUT
DEPARTMENT OF TRANSPORTATION

Filename: ...\0172-435 & 436_SB_Index of Drawings_S1.dgn

SIGNATURE/ BLOCK: **OFFICE OF ENGINEERING**

APPROVED BY:

PROJECT TITLE: **INSTALLATION AND REVISION OF TRAFFIC CONTROL SIGNALS IN DISTRICTS 1 & 2**

TOWN: **VARIES**

DRAWING TITLE: **DRAWING INDEX**

PROJECT NO. **172-435 172-436**

DRAWING NO. **S-1**

SHEET NO. **04.01**

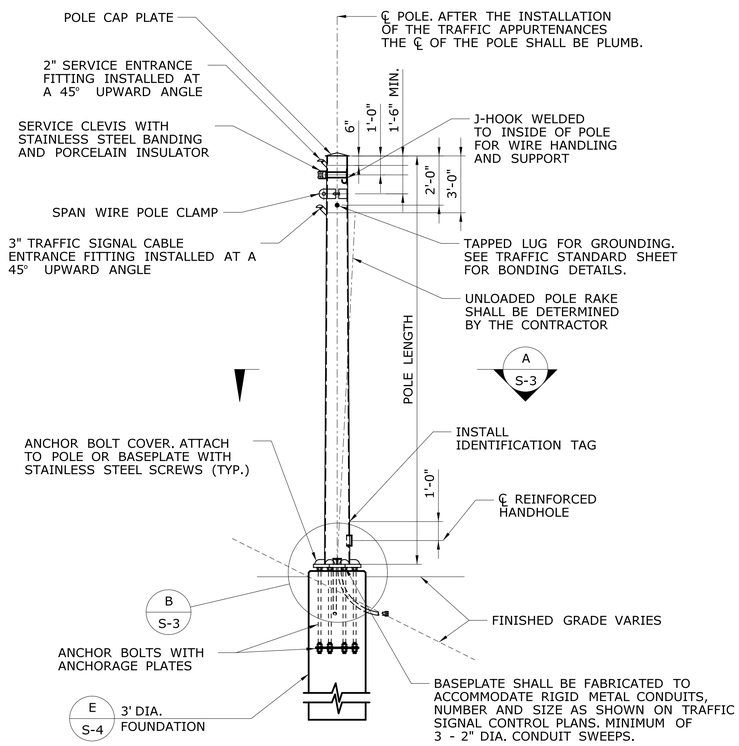

ELEVATION
SPAN POLE
SCALE: 1/4" = 1'-0"

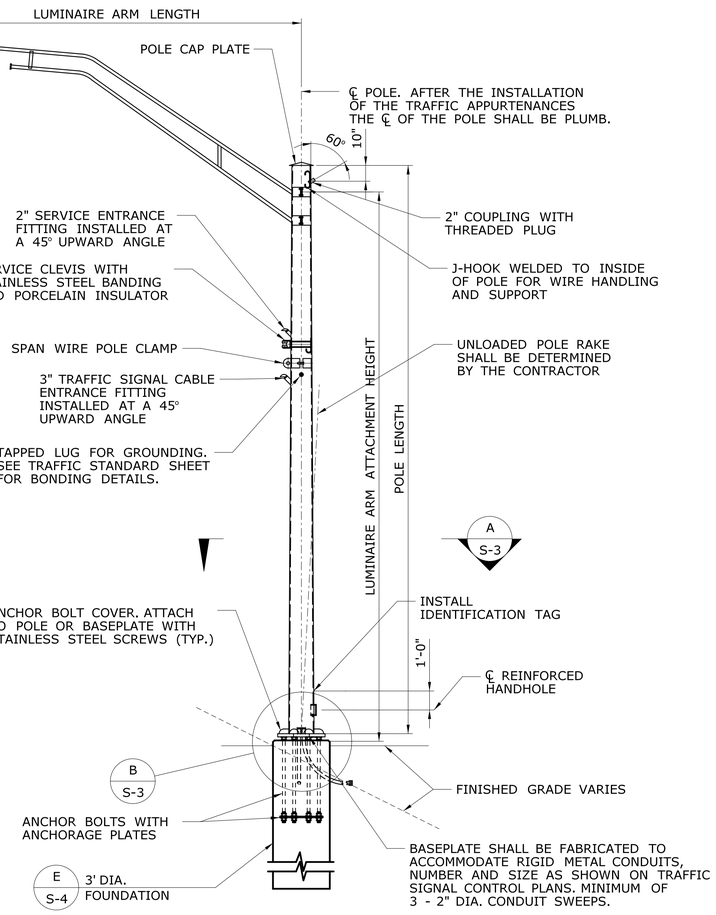

ELEVATION
COMBINATION SPAN POLE
SCALE: 1/4" = 1'-0"

SPAN POLE NOTES

THE SPAN POLE, INCLUDING THE ANCHORAGE TO THE FOUNDATION, SHALL BE DESIGNED, FABRICATED AND INSTALLED BY THE CONTRACTOR, IN ACCORDANCE WITH THE SPECIAL PROVISION "XX STEEL SPAN POLE" OR "COMBINATION STEEL SPAN POLE".

THE DIMENSIONS OF THE SPAN POLE AND DETAILS OF THE TRAFFIC APPURTENANCES SUPPORTED BY THE SPAN POLE ARE SHOWN ON THE TRAFFIC SIGNAL PLANS. THE POLE LENGTH AND THE ATTACHMENT HEIGHTS SHALL BE VERIFIED BY THE CONTRACTOR BASED ON THE FINISHED GRADE AT THE SITE, TOP OF FOUNDATION ELEVATION, THE LOCATIONS OF OVERHEAD UTILITY CABLES AND THE TRAFFIC APPURTENANCE MOUNTING HEIGHTS. IF THE POLE LENGTH IS INADEQUATE, THE CONTRACTOR SHALL NOTIFY THE ENGINEER.

THE SPAN POLE SHALL BE DESIGNED IN ACCORDANCE WITH THE LATEST EDITION OF THE AASHTO STANDARD SPECIFICATIONS FOR STRUCTURAL SUPPORTS FOR HIGHWAY SIGNS, LUMINAIRES AND TRAFFIC SIGNALS, INCLUDING THE LATEST INTERIM SPECIFICATIONS, AS AMENDED BY THE SPECIAL PROVISION "XX STEEL SPAN POLE" OR "COMBINATION STEEL SPAN POLE".

THE SPAN POLE SHALL BE DESIGNED FOR THE LOAD EFFECTS DUE TO THE SPAN WIRE(S) ATTACHED TO THE POLE AND ALL THE TRAFFIC APPURTENANCES (SIGNALS, SIGNS, LUMINAIRES, CAMERAS, ETC.) ATTACHED TO THE SPAN WIRE AND POLE. THE LOAD EFFECT DUE TO THE SPAN WIRE, RESULTING FROM THE ATTACHED APPURTENANCES, WILL NOT BE PROVIDED AND SHALL BE DETERMINED BY THE CONTRACTOR. THE SPAN POLE SHALL ALSO BE DESIGNED FOR THE LOAD EFFECTS FROM FUTURE TRAFFIC APPURTENANCES ARRANGED, POSITIONED AND LOCATED AS SHOWN ON THE PLANS. THE SPAN POLE SHALL BE DESIGNED FOR LOAD EFFECTS DURING ALL STAGES OF CONSTRUCTION THAT MAY EXIST DURING THE PROJECT UNDER WHICH THE SPAN POLE ARE INSTALLED.

THE SPAN POLE SHALL BE DESIGNED TO SUPPORT TRAFFIC APPURTENANCES WITH PROPERTIES NO LESS THAN THOSE SHOWN IN THE TABLE ENTITLED "TRAFFIC APPURTENANCE PROPERTIES - MINIMUM DESIGN VALUES".

THE SPAN POLE SHALL BE DESIGNED TO SUPPORT A SPAN WIRE WITH A SAG NO GREATER THAN 5% OF THE SPAN.

SPAN POLE WORKING DRAWING NOTES

STRUCTUAL PLATE COMPONENTS, SUCH AS THE BASEPLATES, ANCHORAGE PLATES, AND HANDHOLE FRAMES SHALL CONFORM TO THE REQUIREMENTS OF ASTM A572, GRADE 50.

STEEL FOR POLE MEMBERS AND STRUCTURAL PLATE COMPONENTS SHALL MEET CHARPY V-NOTCH IMPACT TESTING REQUIREMENTS IN ACCORDANCE WITH AASHTO T243.

ALL HIGH STRENGTH BOLTS SHALL CONFORM TO ASTM A325, TYPE 1. NUTS SHALL CONFROM TO ASTM A563, GRADE DH. CIRCULAR, FLAT, HARDENED STEEL WASHERS SHALL CONFORM TO ASTM F436. THE BOLTS, NUTS, AND WASHERS SHALL BE GALVANIZED IN ACCORDANCE WITH ASTM F2329 OR ASTM B695, CLASS 55. THE HIGH STRENGTH BOLTS SHALL CONFORM TO THE REQUIREMENTS OF SUBARTICLE M.06.02-3. ANCHOR BOLTS SHALL CONFORM TO ASTM F1554, GRADE 105.

NEOPRENE GASKET MATERIAL AND CLOSED CELL ELASTOMER SHALL CONFORM TO ASTM D1056, GRADE 2A2 OR 2A3.

THE SPON WIRE POLE CLAMP SHALL BE DESIGNED TO SUPPORT A MINNIMUM TENSILE FORCE OF 12,000 POUNDS OR 3 TIMES THE MAXIMUM CALCULATED TENSILE FORCE IN THE SPAN WIRE, WHICHEVER IS GREATER.

REV.	DATE	REVISION DESCRIPTION	SHEET NO.

THE INFORMATION, INCLUDING ESTIMATED QUANTITIES OF WORK, SHOWN ON THESE SHEETS IS BASED ON LIMITED INVESTIGATIONS BY THE STATE AND IS IN NO WAY WARRANTED TO INDICATE THE CONDITIONS OF ACTUAL QUANTITIES OF WORK WHICH WILL BE REQUIRED.

Plotted Date: 6/13/2017

DESIGNER/DRAFTER: JFG
CHECKED BY: BKC
SCALE AS NOTED

STATE OF CONNECTICUT
DEPARTMENT OF TRANSPORTATION

Filename: ...\0172-435 & 436_SB_SpanPoleElev_S2.dgn

SIGNATURE/BLOCK: OFFICE OF ENGINEERING
APPROVED BY:

PROJECT TITLE: INSTALLATION AND REVISION OF TRAFFIC CONTROL SIGNALS IN DISTRICTS 1 & 2

TOWN: VARIES

DRAWING TITLE: STEEL SPAN POLE ELEVATION

PROJECT NO. 172-435 172-436
DRAWING NO. S-2
SHEET NO. 04.02

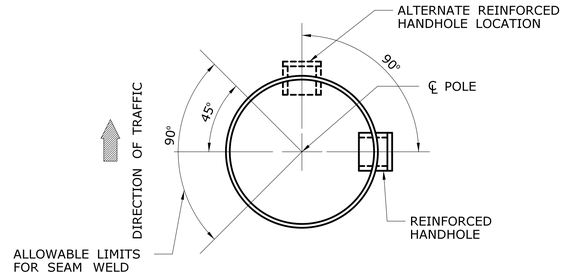

POLE WITH 1 SEAM WELD

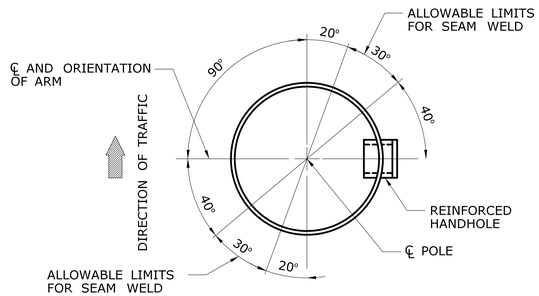

POLE WITH 2 SEAM WELDS

SECTION A
SCALE: $1\frac{1}{2}$" = 1'-0"

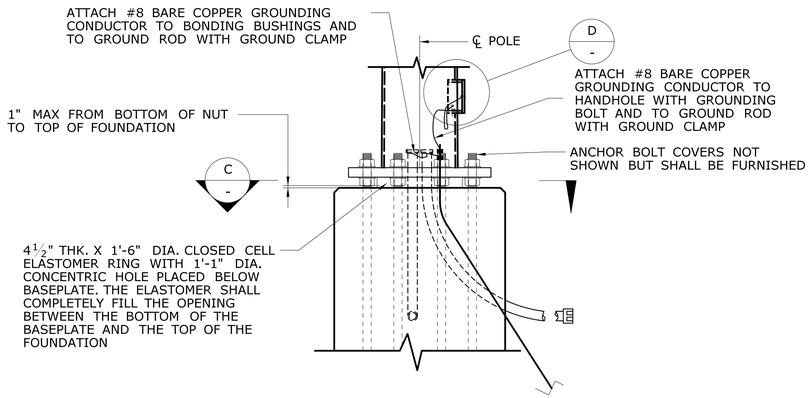

DETAIL B
SCALE: $\frac{3}{4}$"=1'-0"

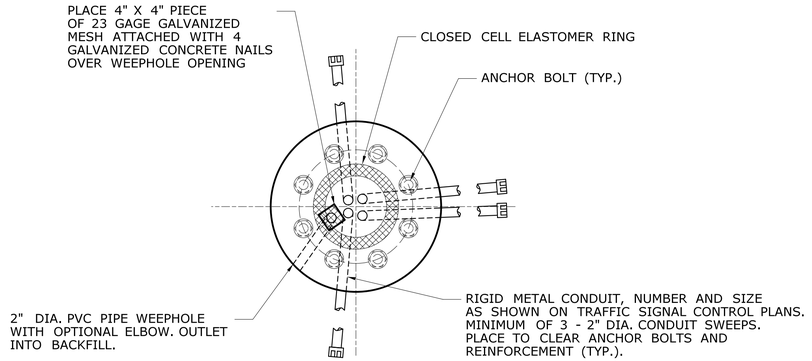

SECTION C
SCALE: $\frac{3}{4}$"=1'-0"

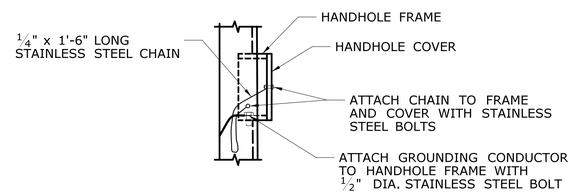

DETAIL D
SCALE: $1\frac{1}{2}$" = 1'-0"

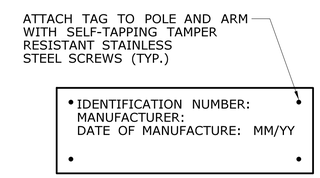

IDENTIFICATION TAG
NTS

TRAFFIC APPURTENANCE PROPERTIES MINIMUM DESIGN VALUES

	3 SECTION , 12" DIA. TRAFFIC SIGNAL W/ BACKPLATE (2'-0" x 4'-4")	4 SECTION , 12" DIA. TRAFFIC SIGNAL W/BACKPLATE (2'-0" x 5'-6")	5 SECTION , 12" DIA.TRAFFIC SIGNAL W/ BACKPLATE (2'-0" x 6'-8")	5 SECTION , 12" DIA.TRAFFIC SIGNAL W/ BACKPLATE (3'-2" x 4'-4")	SHEET ALUMINUM SIGN PANEL (WIDTH / HEIGHT)
WEIGHT, INCLUDING MOUNTING HARDWARE	65 LBS	80 LBS	95 LBS	105 LBS	4 LBS/SQ.FT.
TOTAL SURFACE AREA	28.04 SQ. FT.	35.46 SQ. FT.	45.16 SQ. FT.	41.04 SQ. FT.	BASED ON PANEL DIMENSIONS
PROJECTED AREA, FRONT FACE	8.62 SQ. FT.	10.91 SQ. FT.	13.34 SQ. FT.	13.72 SQ. FT.	BASED ON PANEL DIMENSIONS

NOTES:

THE TABULATED VALUES ARE THE MINIMUM VALUES THAT SHALL BE USED FOR THE DESIGN.

SPAN POLES SHALL BE DESIGNED ASSUMING ALL TRAFFIC SIGNALS ARE COMPOSED OF 12" DIAMETER SECTIONS WITH BACKPLATES.

THE PROJECTED FRONT FACE AREA IS IN A PLANE PARALLEL TO THE PLANE FORMED BY THE SPAN WIRE AND THE POLE.

IF MULTIPLE APPURTENANCES ARE ATTACHED AT THE SAME LOCATION, THE MINIMUM DESIGN VALUE SHALL BE NO LESS THAN THE SUM OF THE CORRESPONDING TRAFFIC APPURTENANCE PROPERTIES.

FOR TRAFFIC APPURTENANCES NOT SHOWN, THE PROPERTIES SHALL BE DETERMINED BY THE CONTRACTOR AND SUBMITTED FOR REVIEW WITH THE WORKING DRAWING SUBMITTAL.

SPAN POLE WORKING DRAWING NOTES

EXACT SEAM WELD(S) LOCATION TO BE DETAILED ON WORKING DRAWINGS.

NON-DESTRUCTIVE TEST 100% OF PARTIAL JOINT PENETRATION LONGITUDINAL SEAM WELDS IN ACCORDANCE WITH THE MAGNETIC PARTICLE METHOD. NON-DESTRUCTIVE TEST 100% OF COMPLETE JOINT PENETRATION SEAM WELDS IN ACCORDANCE WITH THE ULTRASONIC METHOD.

ALL TUBULAR MEMBER TO TRANSVERSE PLATE CONNECTIONS SHALL BE MADE WITH A COMPLETE JOINT PENETRATION GROOVE WELD WITH A BACKING RING ATTACHED TO THE PLATE WITH A CONTINUOUS FILLET WELD. NON-DESTRUCTIVE TEST 100% OF THE COMPLETE JOINT PENETRATION GROOVE WELDS BY THE ULTRASONIC METHOD AFTER FABRICATION AND PRIOR TO GALVANIZING. NON-DESTRUCTIVE TEST 100% OF BACKING RING FILLET WELDS BY THE MAGNETIC PARTICLE METHOD AFTER FABRICATION PRIOR TO GALVANIZING. AFTER GALVANIZING, THE JOINT BETWEEN THE BACKING RING AND TUBULAR MEMBER SHALL BE SEALED WITH SILICONE SEALANT TO PREVENT THE INGRESS OF MOISTURE.

REV.	DATE	REVISION DESCRIPTION	SHEET NO.

THE INFORMATION, INCLUDING ESTIMATED QUANTITIES OF WORK, SHOWN ON THESE SHEETS IS BASED ON LIMITED INVESTIGATIONS BY THE STATE AND IS IN NO WAY WARRANTED TO INDICATE THE CONDITIONS OF ACTUAL QUANTITIES OF WORK WHICH WILL BE REQUIRED.

Plotted Date: 6/13/2017

DESIGNER/DRAFTER: JFG
CHECKED BY: BKC
SCALE AS NOTED

STATE OF CONNECTICUT
DEPARTMENT OF TRANSPORTATION

Filename: ...\0172-435 & 436_SB_SpanPoleElev_S3.dgn

SIGNATURE/BLOCK: OFFICE OF ENGINEERING
APPROVED BY:

PROJECT TITLE: INSTALLATION AND REVISION OF TRAFFIC CONTROL SIGNALS IN DISTRICTS 1 & 2

TOWN: VARIES

DRAWING TITLE: STEEL SPAN POLE DETAILS

PROJECT NO. 172-435 172-436
DRAWING NO. S-3
SHEET NO. 04.03

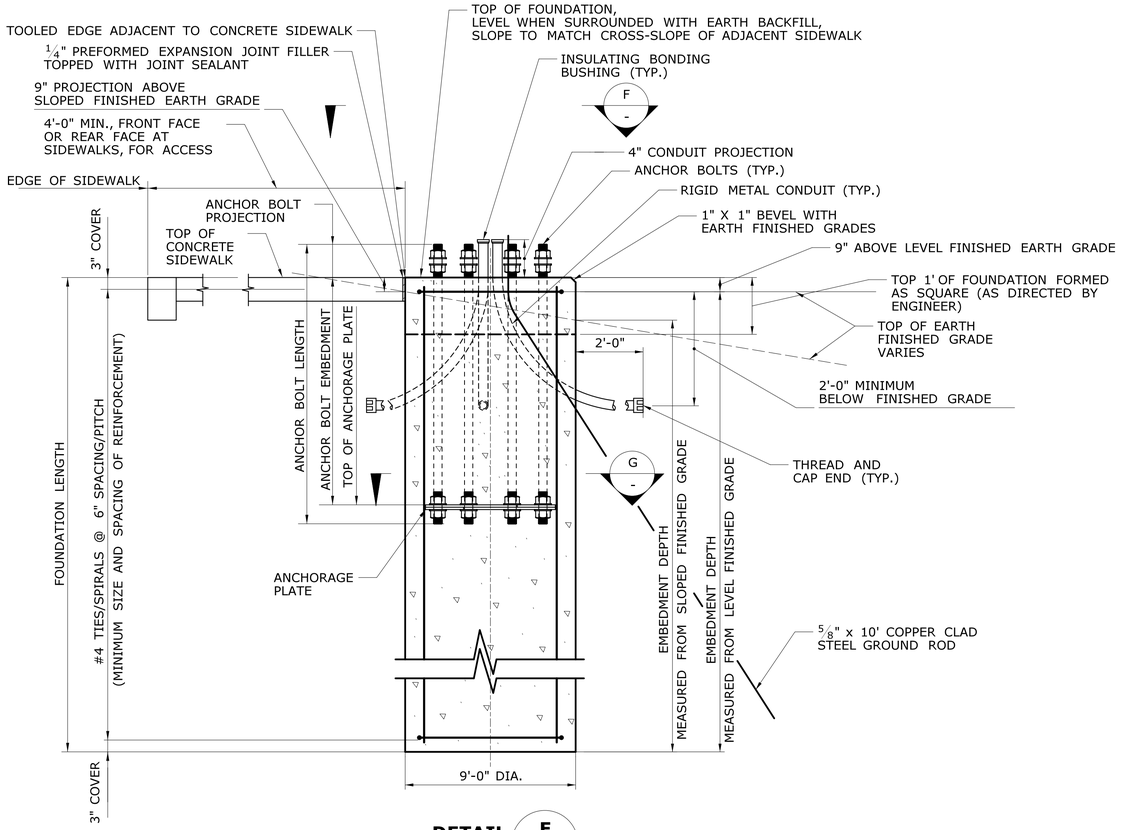

DETAIL E
SCALE: 3/4"=1'-0"

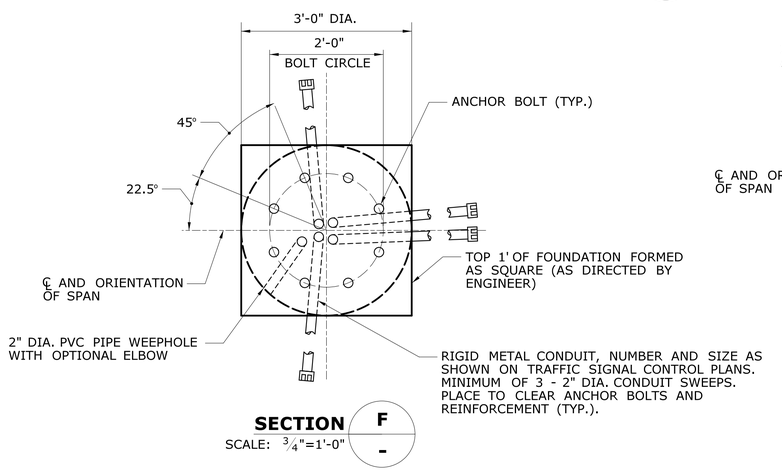

SECTION F
SCALE: 3/4"=1'-0"

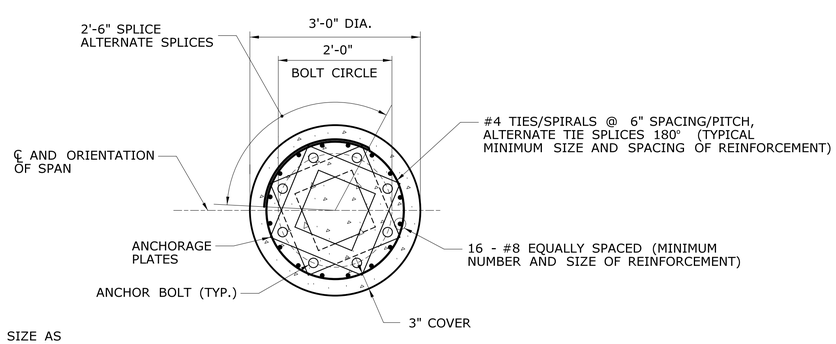

SECTION G
SCALE: 3/4"=1'-0"

FOUNDATION NOTES

THE DRILLED SHAFT FOUNDATION FOR THE SPAN POLE SHALL BE DESIGNED, FABRICATED, AND CONSTRUCTED BY THE CONTRACTOR IN ACCORDANCE WITH THE SPECIAL PROVISION "TRAFFIC CONTROL FOUNDATION-SPAN POLE".

THE FOUNDATION SHALL BE DESIGNED FOR THE SOILS AND ROCK PROPERTIES BASED ON THE SUBSURFACE CONDITIONS (CHARACTER OF THE SOIL AND ROCK, PRESENCE OF GROUND WATER, ETC.) IN THE LOCATION OF, ADJACENT TO AND BELOW THE DRILLED SHAFT FOUNDATION EXCAVATION. THE NEED AND EXTENT OF ALL SUBSURFACE EXPLORATIONS AND INVESTIGATIONS SHALL BE DETERMINED BY THE CONTRACTOR.

THE DESIGN OF THE FOUNDATION SHALL BE COORDINATED WITH THE SPAN POLE AND THE SPAN POLE ANCHORAGE TO ENSURE THAT THE FOUNDATION IS ADEQUATE FOR THE SPAN POLE REACTIONS AND TO AVOID CONFLICTS BETWEEN THE EMBEDDED SPAN POLE ANCHORAGE AND THE FOUNDATION REINFORCEMENT.

THE CONCRETE FOR THE FOUNDATION SHALL CONFORM TO CLASS "F" CONCRETE. THE SPECIFIED COMPRESSIVE STRENGTH OF THE CONCRETE, f'_c, USED IN THE DESIGN OF THE FOUNDATION SHALL BE 4,000 PSI. THE MINIMUM COMPRESSIVE STRENGTH OF THE CONCRETE IN THE CONSTRUCTED FOUNDATION SHALL BE CONFORM TO THE REQUIREMENTS OF "SECTION 6.01 - CONCRETE FOR STRUCTURES".

THE REINFORCEMENT SHALL BE UNCOATED AND CONFORM TO ASTM A615, GRADE 60 (ASTM A615M, GRADE 420). THE REINFORCEMENT SHALL BE ASSEMBLED WITH WIRE TIES. WELDING TO ASSEMBLE REINFORCEMENT IS NOT PERMITTED. ALL REINFORCEMENT SHALL HAVE 3" COVER, UNLESS OTHERWISE NOTED.

THE CONCRETE SHALL BE PLACED IN THE EXCAVATION AGAINST UNDISTURBED EARTH.

THE SPAN POLE SHALL NOT BE ERECTED ON THE FOUNDATION UNTIL THE CONCRETE HAS ATTAINED A COMPRESSIVE STRENGTH GREATER THAN OR EQUAL TO 4000 PSI.

THE COST OF THE FOUNDATION, INCLUDING THE EXCAVATION, CONCRETE, REINFORCEMENT, AND PREFORMED EXPANSION JOINT FILLER, INCLUDING THE DESIGN AND FABRICATION, SHALL BE PAID FOR UNDER THE ITEM "TRAFFIC CONTROL FOUNDATION-SPAN POLE".

WHERE AN EXISTING CONCRETE SLAB ABUTTING A FOUNDATION IS DAMAGED OR CUT DURING INSTALLATION, REPLACE THE ENTIRE SECTION.

SPAN POLE WORKING DRAWING NOTES

THE REINFORCING STEEL SHALL BE UNCOATED, ASTM A615, GRADE 60 REINFORCEMENT CONFORMING TO THE REQUIREMENTS OF ARTICLE M.06.01.

THE CONCRETE FOR THE DRILLED SHAFTS SHALL CONFORM TO ARTICLE M.03 FOR CLASS "F" CONCRETE. THE 28 DAY MINIMUM COMPRESSIVE STRENGTH OF THE CONCRETE IN THE CONSTRUCTED FOUNDATION SHALL BE 4,400 PSI.

RIGID METAL CONDUIT, GROUND ROD SLEEVES, RELATED HARDWARE, AND END CAPS SHALL BE GALVANIZED STEEL CONDUIT, AND SHALL CONFORM TO ARTICLE M.15.09.

BARE COPPER WIRE SHALL CONFORM TO ARTICLE M.15.13.

REV.	DATE	REVISION DESCRIPTION	SHEET NO.

THE INFORMATION, INCLUDING ESTIMATED QUANTITIES OF WORK, SHOWN ON THESE SHEETS IS BASED ON LIMITED INVESTIGATIONS BY THE STATE AND IS IN NO WAY WARRANTED TO INDICATE THE CONDITIONS OF ACTUAL QUANTITIES OF WORK WHICH WILL BE REQUIRED.

Plotted Date: 6/13/2017

DESIGNER/DRAFTER: JFG
CHECKED BY: BKC
SCALE AS NOTED

STATE OF CONNECTICUT
DEPARTMENT OF TRANSPORTATION

Filename: ...\0172-0435-0436_SB_SpanPoleFndDetails_S4.dgn

SIGNATURE/BLOCK: OFFICE OF ENGINEERING
APPROVED BY: Mary E. Bach

PROJECT TITLE: INSTALLATION AND REVISION OF TRAFFIC CONTROL SIGNALS IN DISTRICTS 1 & 2

TOWN: VARIES

DRAWING TITLE: STEEL SPAN POLE FOUNDATION DETAILS

PROJECT NO. 172-435 172-436
DRAWING NO. S-4
SHEET NO. 04.04