04 - STRUCTURES
INDEX OF DRAWINGS

DRAWING NUMBER	DRAWING TITLE	DRAWING NUMBER	DRAWING TITLE
S-01	INDEX OF DRAWINGS		
S-02	GENERAL NOTES		
S-03	GENERAL PLAN SOUTH END		
S-04	GENERAL PLAN NORTH END		
S-05	PRECAST CONCRETE BLOCK WALL		
S-06	SIDEWALK AND RAIL GENERAL PLAN		
S-07	STRUCTURAL SIDEWALK DETAILS SOUTH END		
S-08	STRUCTURAL SIDEWALK DETAILS NORTH END		
S-09	RAILING DETAILS AND SECTIONS		
S-10	GRANITE STONE CURBING FOR BRIDGES		

THE DESIGN APPEARS TO CONFORM TO APPLICABLE CRITERIA. APPROVAL IS NOT TO BE CONSTRUED TO MEAN THAT ALL ASPECTS OF THE DESIGN HAVE BEEN PERSONALLY CHECKED BY THE UNDERSIGNED.

Mary E. Baker, P.E.
2017.08.09
12:53:36-04'00'

TRANSPORTATION PRINCIPAL ENGINEER

REV.	DATE	REVISION DESCRIPTION	SHEET NO.

THE INFORMATION, INCLUDING ESTIMATED QUANTITIES OF WORK, SHOWN ON THESE SHEETS IS BASED ON LIMITED INVESTIGATIONS BY THE STATE AND IS IN NO WAY WARRANTED TO INDICATE THE CONDITIONS OF ACTUAL QUANTITIES OF WORK WHICH WILL BE REQUIRED.

Plotted Date: 8/9/2017

DESIGNER/DRAFTER: LWC

CHECKED BY: JRH

SCALE AS NOTED

STATE OF CONNECTICUT
DEPARTMENT OF TRANSPORTATION

Filename: ...\01 - Index of Drawings.dgn

SIGNATURE/ BLOCK:

OFFICE OF ENGINEERING

APPROVED BY:

PROJECT TITLE:

RETAINING WALL FAILURE REMEDIATION ON ROUTE 12

TOWN: NORWICH

DRAWING TITLE: INDEX OF DRAWINGS

PROJECT NO. 103-269

DRAWING NO. S-01

SHEET NO. 04.01

GENERAL NOTES

SPECIFICATIONS: CONNECTICUT DEPARTMENT OF TRANSPORTATION FORM 817 (2016), SUPPLEMENTAL SPECIFICATIONS THERETO DATED JANUARY 2017 AND SPECIAL PROVISIONS.

DESIGN SPECIFICATIONS: AASHTO LRFD BRIDGE DESIGN SPECIFICATIONS 7TH EDITION -2014 WITH LATEST INTERIM, AND SUPPLEMENTED BY THE CONNECTICUT DEPARTMENT OF TRANSPORTATION BRIDGE DESIGN MANUAL - 2003.

DESIGN STRENGTH:
CLASS "F" CONCRETE: F'c=4000 PSI MIN. (28 DAYS)
REINFORCEMENT (ASTM A615 GRADE 60 UNCOATED): Fy=60000 PSI

THE SPECIFIED CONCRETE STRENGTH USED IN DESIGN, F'c, OF THE CONCRETE COMPONENTS IS NOTED ABOVE. THE MINIMUM COMPRESSIVE STRENGTH OF THE CONCRETE IN THE CONSTRUCTED COMPONENTS SHALL CONFORM TO THE REQUIREMENTS OF 'SECTION 6.01 CONCRETE FOR STRUCTURES'

DIMENSIONS AND ELEVATIONS: ALL DIMENSIONS ARE GIVEN IN FEET UNLESS OTHERWISE NOTED. ALL ELEVATIONS ARE GIVEN IN FEET.
WHEN DIMENSIONS OR ELEVATIONS ARE GIVEN TO LESS THAN THREE DECIMAL PLACES, THE OMITTED DIGITS SHALL BE ASSUMED TO BE ZEROS.

EXISTING DIMENSIONS: DIMENSIONS OF THE EXISTING STRUCTURE SHOWN ON THESE PLANS ARE FOR GENERAL REFERENCE ONLY. THEY HAVE BEEN ESTIMATED BASED ON SURVEY INFORMATION AND ARE NOT GUARANTEED. THE CONTRACTOR SHALL TAKE ALL FIELD MEASUREMENTS NECESSARY TO ASSURE PROPER FIT OF THE FINISHED WORK AND SHALL ASSUME FULL RESPONSIBILITY FOR THEIR ACCURACY. WHEN SHOP DRAWINGS BASED ON FIELD MEASUREMENTS ARE SUBMITTED FOR APPROVAL, THE FIELD MEASUREMENTS SHALL ALSO BE SUBMITTED FOR REFERENCE BY THE REVIEWER.

JOINT SEAL: THE COST OF FURNISHING AND PLACING JOINT SEAL IS INCLUDED IN THE ITEM FOR "CLASS 'F' CONCRETE"

EXPOSED EDGES: EXPOSED EDGES OF CONCRETE SHALL BE BEVELED 1" X 1" UNLESS DIMENSIONED OTHERWISE.

CONCRETE COVER: ALL REINFORCEMENT SHALL HAVE 2" COVER UNLESS OTHERWISE NOTED.

PREFORMED EXPANSION JOINT FILLER: JOINT FILLER WILL BE MEASURED FOR PAYMENT AS "½" PREFORMED EXPANSION JOINT FILLER"

CONSTRUCTION JOINTS: CONSTRUCTION JOINTS OTHER THAN THOSE SHOWN ON THE PLANS WILL NOT BE PERMITTED WITHOUT THE PRIOR APPROVAL OF THE ENGINEER. THE SURFACE OF THE CONCRETE SHALL BE FREE OF LOOSE MATERIAL, UNSOUND CONCRETE AND FOREIGN MATERIAL. THE SURFACES SHALL BE CLEANED TO THE SATISFACTION OF THE ENGINEER AND SHALL BE DAMPENED WITH WATER JUST PRIOR TO PLACING THE CONCRETE. ALL CONSTRUCTION/EXPANSION JOINTS ARE TO BE SEALED WITH ½" X ½" SILICONE JOINT SEAL.

CONSTRUCTION STAKING: THE CONTRACTOR SHALL SURVEY AND RECORD ELEVATIONS AT THE TOP OF ROADWAY ALONG THE PORTION OF SIDEWALK TO BE REMOVED. ELEVATIONS SHALL BE TAKEN AT SUFFICIENT INTERVALS TO CAPTURE THE VERTICAL CURVATURE OF THE PAVEMENT. THE TOP OF PROPOSED CURB AT THE STRUCTURAL SIDEWALK SHALL BE SET TO A SMOOTH, CONTINUOUS VERTICAL CURVE, WITH NO NOTICEABLE ANGLE POINTS.

DESCRIPTION OF WORK

1. CONSTRUCT CONCRETE BLOCK RETAINING WALL, AND CONCRETE CAP AND INSTALL ROOF DRAIN OUTLET.
2. BACKFILL BLOCK WALL AND CONSTRUCT EMBANKMENT TO TOP OF PROPOSED STRUCTURAL SIDEWALK.
3. REMOVE EXISTING SIDEWALK AND TOP PORTION OF THE EXISTING STONE MASONRY WALL.
4. CONSTRUCT STRUCTURAL SIDEWALK
5. CONSTRUCT REMAINDER OF EMBANKMENT TO FINISHED GRADE AND INSTALL METAL BRIDGE RAIL

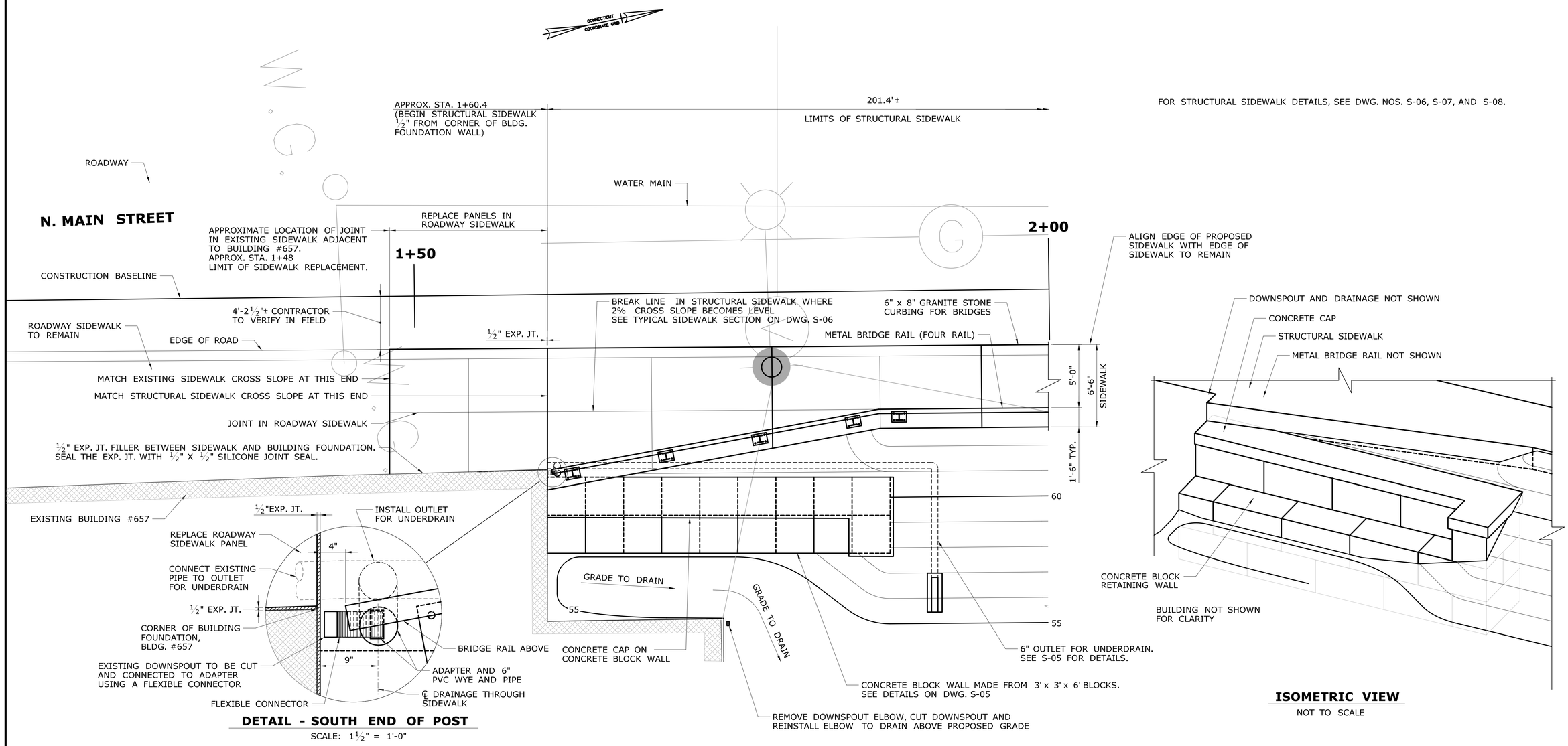

DETAIL - SOUTH END OF POST

SCALE: 1 1/2" = 1'-0"

ISOMETRIC VIEW

NOT TO SCALE

PLAN - SOUTH END OF STRUCTURAL SIDEWALK

SCALE: 1/4" = 1'-0"

REV.	DATE	REVISION DESCRIPTION	SHEET NO.

THE INFORMATION, INCLUDING ESTIMATED QUANTITIES OF WORK, SHOWN ON THESE SHEETS IS BASED ON LIMITED INVESTIGATIONS BY THE STATE AND IS IN NO WAY WARRANTED TO INDICATE THE CONDITIONS OF ACTUAL QUANTITIES OF WORK WHICH WILL BE REQUIRED.

Plotted Date: 8/9/2017

DESIGNER/DRAFTER: LWC

CHECKED BY: JRH

SCALE AS NOTED

STATE OF CONNECTICUT
DEPARTMENT OF TRANSPORTATION

Filename: ...\03 - General Plan South End.dgn

SIGNATURE/BLOCK:
OFFICE OF ENGINEERING

APPROVED BY:

PROJECT TITLE:
RETAINING WALL FAILURE REMEDIATION ON ROUTE 12

TOWN: NORWICH

DRAWING TITLE:
GENERAL PLAN SOUTH END

PROJECT NO. 103-269

DRAWING NO. S-03

SHEET NO. 04.03

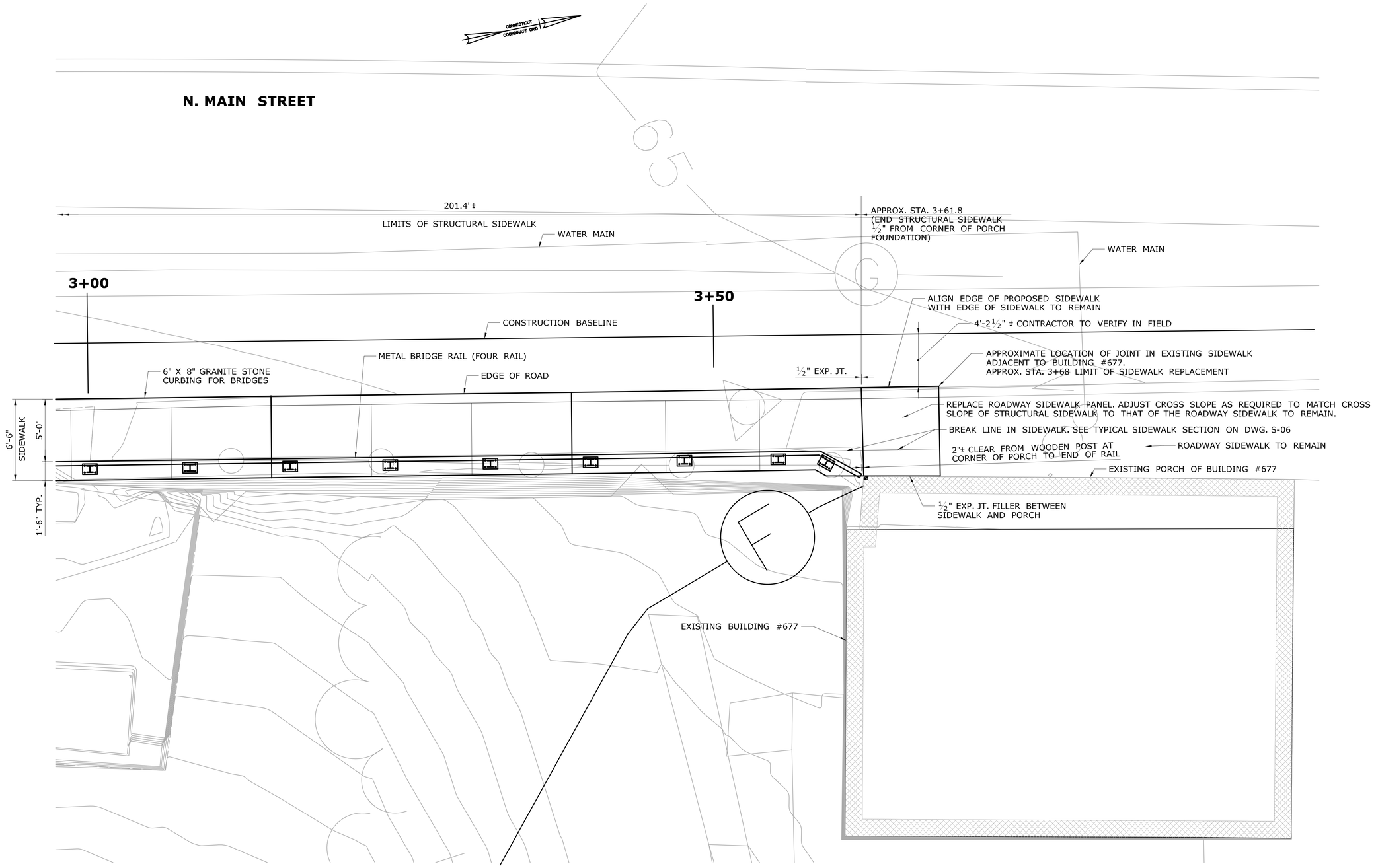

PLAN - NORTH END OF STRUCTURAL SIDEWALK

SCALE: ¼" = 1'-0"

FOR STRUCTURAL SIDEWALK DETAILS,
SEE DWG. NOS. S-06, S-07, AND S-08

REV.	DATE	REVISION DESCRIPTION	SHEET NO.

THE INFORMATION, INCLUDING ESTIMATED QUANTITIES OF WORK, SHOWN ON THESE SHEETS IS BASED ON LIMITED INVESTIGATIONS BY THE STATE AND IS IN NO WAY WARRANTED TO INDICATE THE CONDITIONS OF ACTUAL QUANTITIES OF WORK WHICH WILL BE REQUIRED.

Plotted Date: 8/9/2017

DESIGNER/DRAFTER: LWC

CHECKED BY: JRH

SCALE AS NOTED

STATE OF CONNECTICUT
DEPARTMENT OF TRANSPORTATION

Filename: ...\04 - General Plan North End.dgn

SIGNATURE/ BLOCK:

OFFICE OF ENGINEERING

APPROVED BY:

Mary E. Beck

PROJECT TITLE:

RETAINING WALL FAILURE REMEDIATION ON ROUTE 12

TOWN: **NORWICH**

DRAWING TITLE: **GENERAL PLAN NORTH END**

PROJECT NO. **103-269**

DRAWING NO. **S-04**

SHEET NO. **04.04**

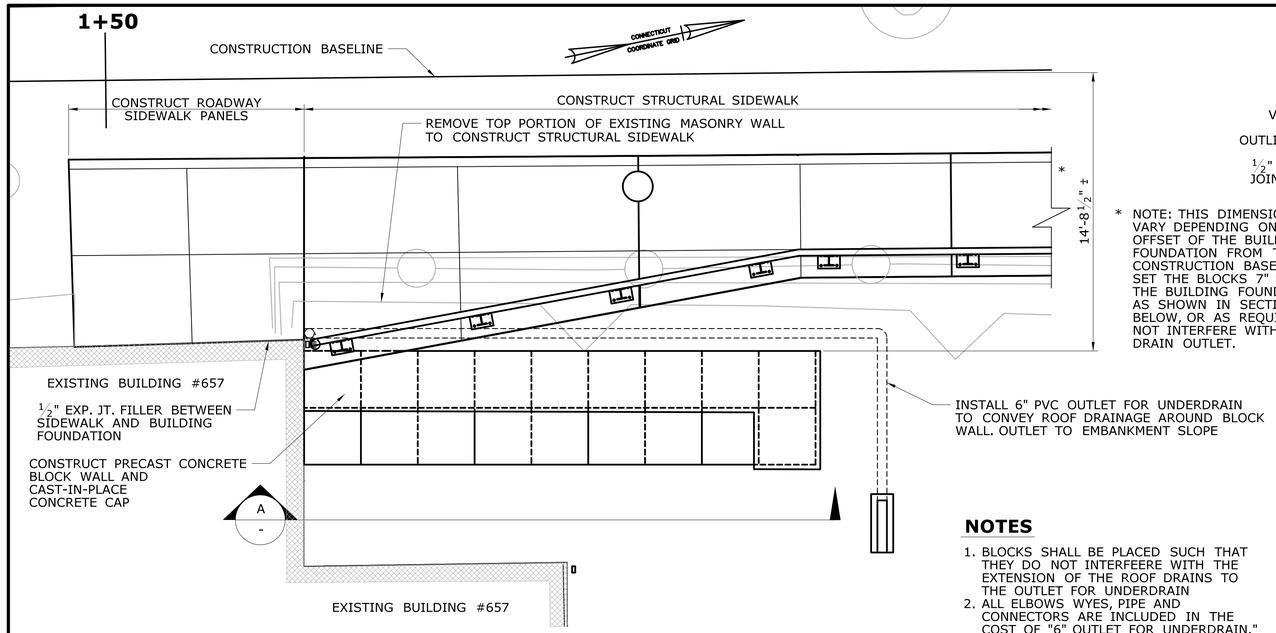

PLAN - PRECAST CONCRETE BLOCK WALL

SCALE: ¼" = 1'-0"

* NOTE: THIS DIMENSION WILL VARY DEPENDING ON THE OFFSET OF THE BUILDING FOUNDATION FROM THE CONSTRUCTION BASELINE. SET THE BLOCKS 7" BEHIND THE BUILDING FOUNDATION AS SHOWN IN SECTION B BELOW, OR AS REQUIRED TO NOT INTERFERE WITH ROOF DRAIN OUTLET.

NOTES

1. BLOCKS SHALL BE PLACED SUCH THAT THEY DO NOT INTERFEERE WITH THE EXTENSION OF THE ROOF DRAINS TO THE OUTLET FOR UNDERDRAIN
2. ALL ELBOWS WYES, PIPE AND CONNECTORS ARE INCLUDED IN THE COST OF "6" OUTLET FOR UNDERDRAIN."
3. MODIFICATION OF SIDING WILL NOT BE MEASURED FOR PAYMENT, BUT WILL BE INCUDED IN THE COST FOR "PRECAST CONCRETE BLOCK"

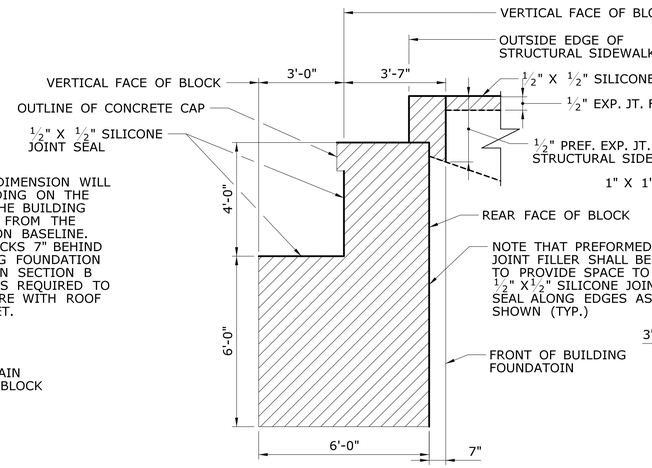

ELEVATION - LIMITS OF JOINT FILLER AT NORTH FACE OF BUILDING FOUNDATOIN

SCALE: ⅜" = 1'-0"

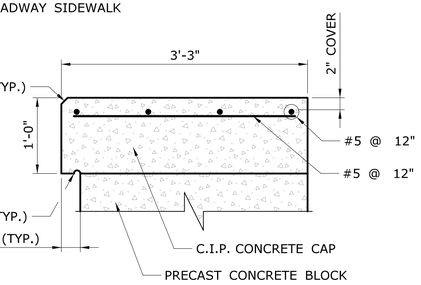

SECTION - CONCRETE CAP

C
-

SCALE: 1" = 1'-0"

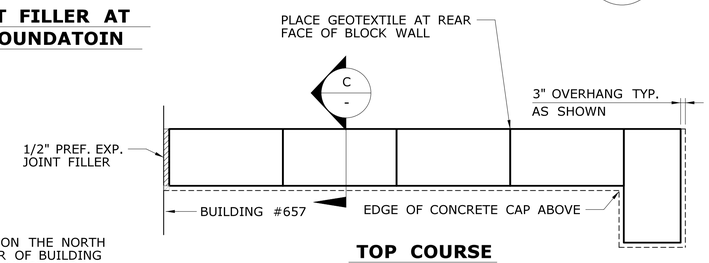

TOP COURSE

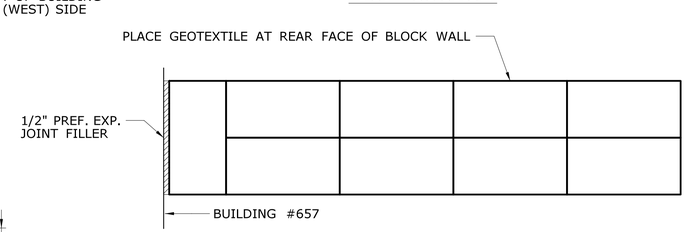

MIDDLE COURSE

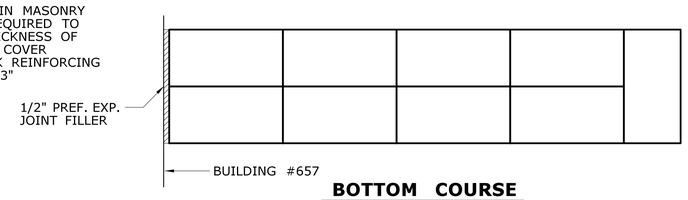

BOTTOM COURSE

PLAN - PRECAST CONCRETE BLOCK WALL

SCALE: ¼" = 1'-0"

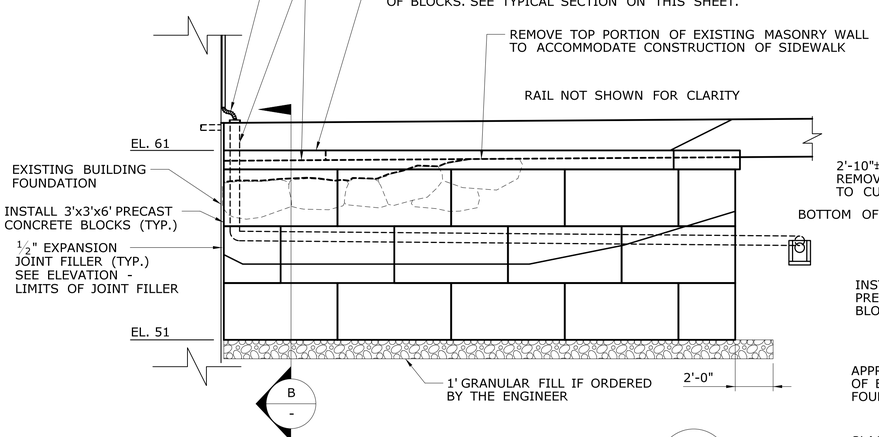

ELEVATION - CONCRETE BLOCK WALL

A
-

SCALE: ¼" = 1'-0"

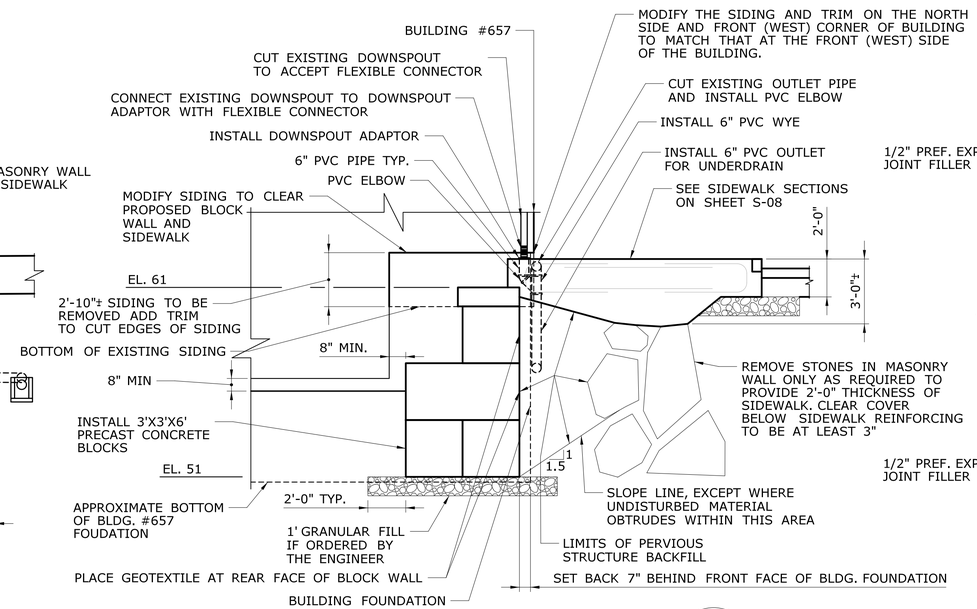

SECTION - CONCRETE BLOCK WALL

B
-

SCALE: ¼" = 1'-0"

REV.	DATE	REVISION DESCRIPTION	SHEET NO.

THE INFORMATION, INCLUDING ESTIMATED QUANTITIES OF WORK, SHOWN ON THESE SHEETS IS BASED ON LIMITED INVESTIGATIONS BY THE STATE AND IS IN NO WAY WARRANTED TO INDICATE THE CONDITIONS OF ACTUAL QUANTITIES OF WORK WHICH WILL BE REQUIRED.

Plotted Date: 8/9/2017

DESIGNER/DRAFTER: LWC
CHECKED BY: JRH
SCALE AS NOTED

STATE OF CONNECTICUT
DEPARTMENT OF TRANSPORTATION

Filename: ...\05 - Precast Concrete Block Wall.dgn

SIGNATURE/BLOCK:
OFFICE OF ENGINEERING
APPROVED BY:

PROJECT TITLE:
RETAINING WALL FAILURE REMEDIATION ON ROUTE 12

TOWN: NORWICH

DRAWING TITLE:
PRECAST CONCRETE BLOCK WALL

PROJECT NO. 103-269
DRAWING NO. S-05
SHEET NO. 04.05

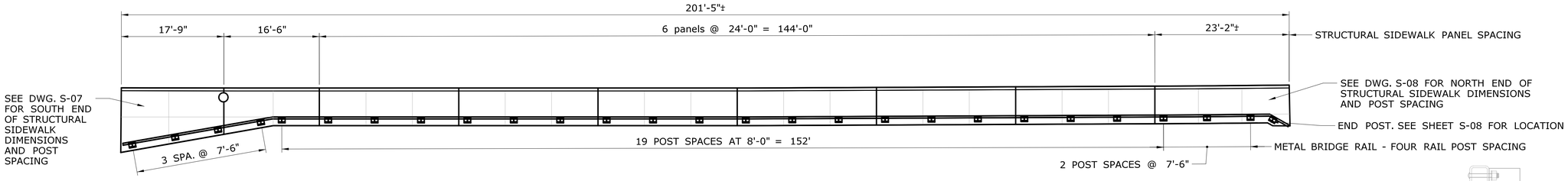

PLAN - SIDEWALK AND POST LAYOUT

SCALE: 1" = 10'

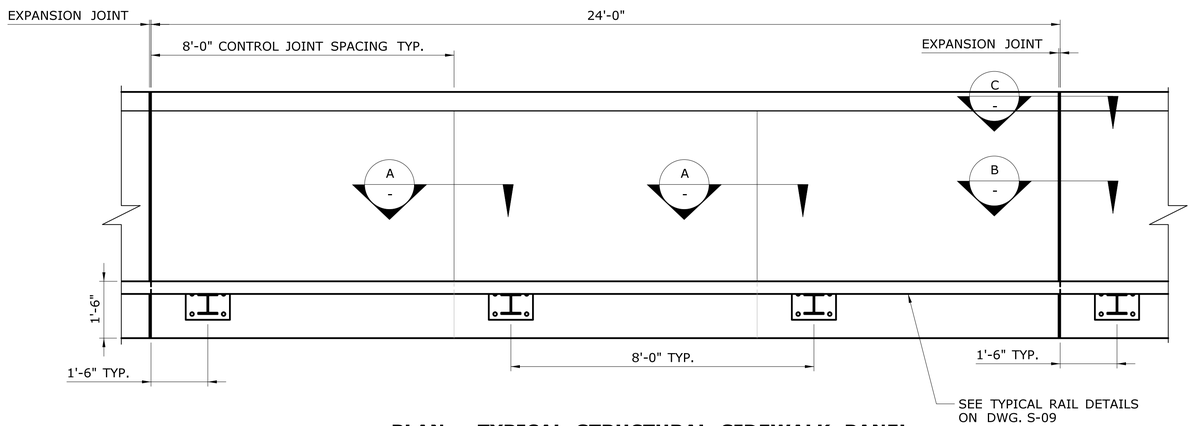

PLAN - TYPICAL STRUCTURAL SIDEWALK PANEL

SCALE: ½" = 1'-0"

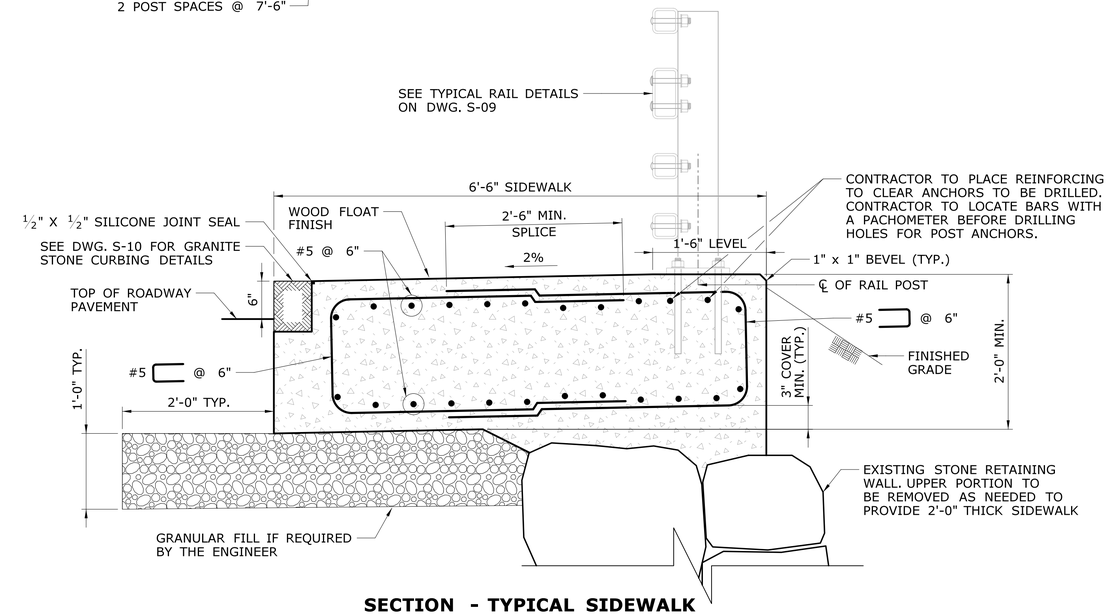

SECTION - TYPICAL SIDEWALK

SCALE: 1" = 1'-0"

NOTE:

REINFORCING BARS ARE DISCONTINUOUS AT EXPANSION JOINTS AND SHALL HAVE 2" COVER BETWEEN JOINT FILLER AND REINFORCING

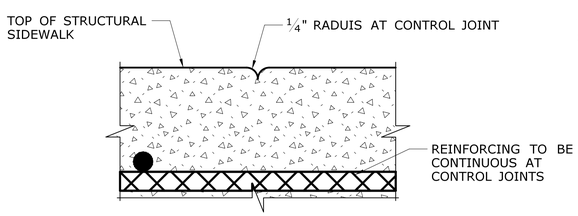

SECTION - TYPICAL STRUCTURAL SIDEWALK CONTROL JOINT

A / -

NOT TO SCALE

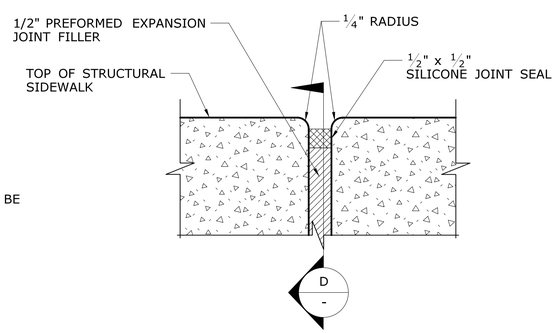

SECTION - TYPICAL STRUCTURAL SIDEWALK EXPANSION JOINT

B / -

NOT TO SCALE

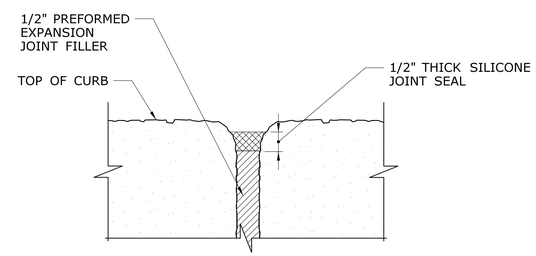

SECTION - TYPICAL GRANITE CURB EXPANSION JOINT

C / -

NOT TO SCALE

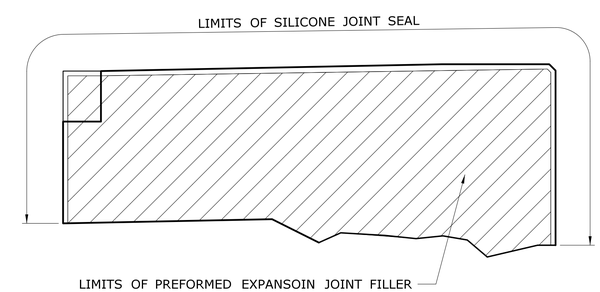

SECTION - TYPICAL EXPANSION JOINT

D / -

SCALE: 1" = 1'-0"

REV.	DATE	REVISION DESCRIPTION	SHEET NO.

THE INFORMATION, INCLUDING ESTIMATED QUANTITIES OF WORK, SHOWN ON THESE SHEETS IS BASED ON LIMITED INVESTIGATIONS BY THE STATE AND IS IN NO WAY WARRANTED TO INDICATE THE CONDITIONS OF ACTUAL QUANTITIES OF WORK WHICH WILL BE REQUIRED.

Plotted Date: 8/9/2017

DESIGNER/DRAFTER: LWC

CHECKED BY: JRH

SCALE AS NOTED

STATE OF CONNECTICUT
DEPARTMENT OF TRANSPORTATION

Filename: ...\06 - Sidewalk and Rail General Plan.dgn

SIGNATURE/BLOCK: OFFICE OF ENGINEERING

APPROVED BY: Mary E. Beck

PROJECT TITLE: RETAINING WALL FAILURE REMEDIATION ON ROUTE 12

TOWN: NORWICH

DRAWING TITLE: SIDEWALK AND RAIL GENERAL PLAN

PROJECT NO. GENERAL PLAN

DRAWING NO. S-06

SHEET NO. 04.06

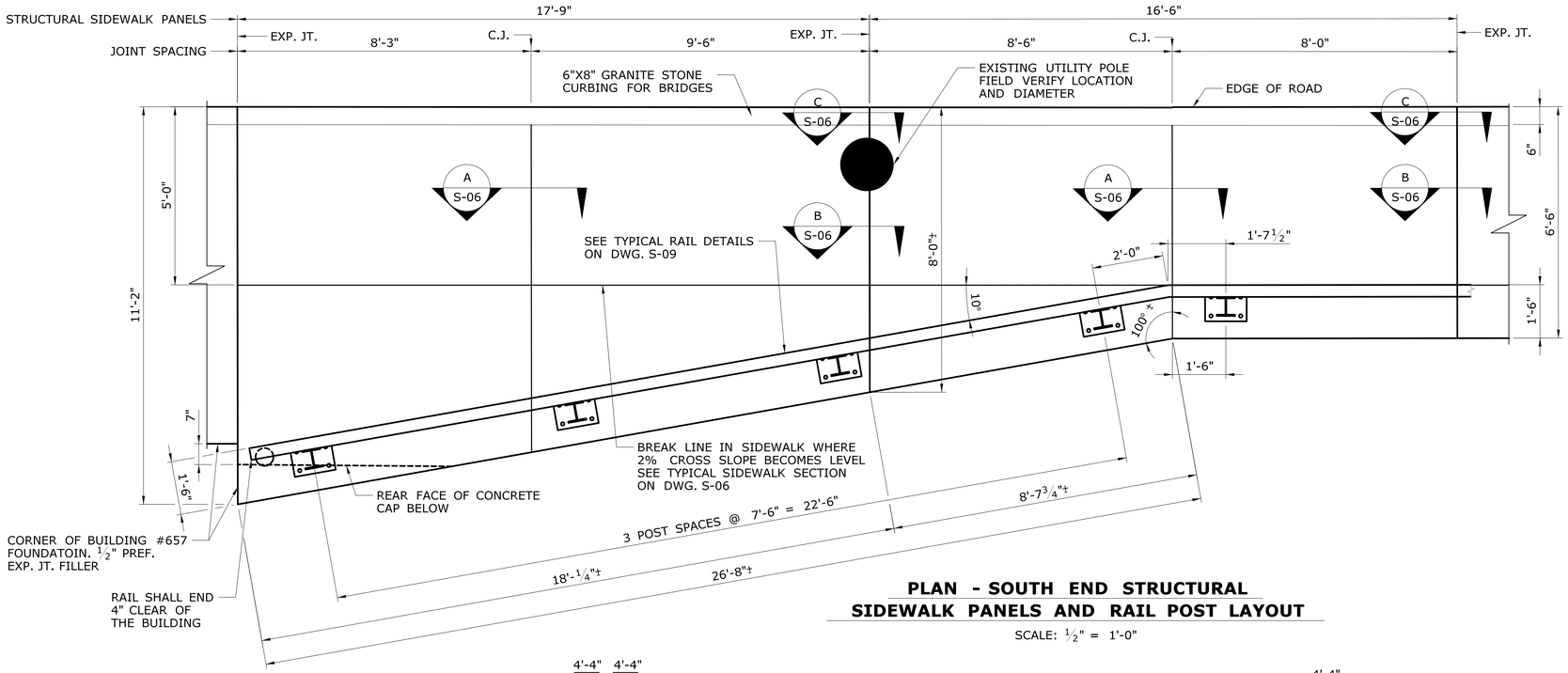

PLAN - SOUTH END STRUCTURAL SIDEWALK PANELS AND RAIL POST LAYOUT

SCALE: ½" = 1'-0"

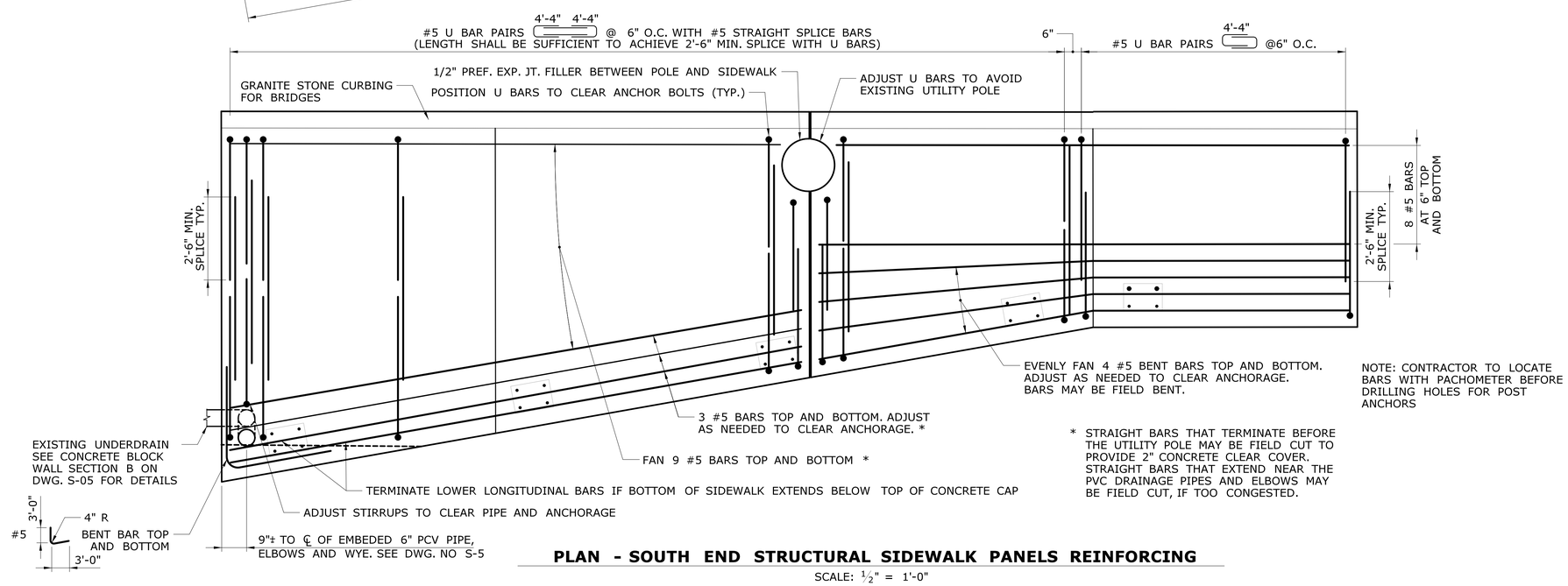

NOTE: CONTRACTOR TO LOCATE BARS WITH PACHOMETER BEFORE DRILLING HOLES FOR POST ANCHORS

* STRAIGHT BARS THAT TERMINATE BEFORE THE UTILITY POLE MAY BE FIELD CUT TO PROVIDE 2" CONCRETE CLEAR COVER. STRAIGHT BARS THAT EXTEND NEAR THE PVC DRAINAGE PIPES AND ELBOWS MAY BE FIELD CUT, IF TOO CONGESTED.

PLAN - SOUTH END STRUCTURAL SIDEWALK PANELS REINFORCING

SCALE: ½" = 1'-0"

REV.	DATE	REVISION DESCRIPTION	SHEET NO.

THE INFORMATION, INCLUDING ESTIMATED QUANTITIES OF WORK, SHOWN ON THESE SHEETS IS BASED ON LIMITED INVESTIGATIONS BY THE STATE AND IS IN NO WAY WARRANTED TO INDICATE THE CONDITIONS OF ACTUAL QUANTITIES OF WORK WHICH WILL BE REQUIRED.

Plotted Date: 8/9/2017

DESIGNER/DRAFTER: LWC

CHECKED BY: JRH

SCALE AS NOTED

STATE OF CONNECTICUT
DEPARTMENT OF TRANSPORTATION

Filename: ...\07 - Structural Sidewalk Details South End.dgn

SIGNATURE/BLOCK:
OFFICE OF ENGINEERING

APPROVED BY:

PROJECT TITLE:
RETAINING WALL FAILURE REMEDIATION ON ROUTE 12

TOWN: NORWICH

DRAWING TITLE:
STRUCTURAL SIDEWALK DETAILS SOUTH END

PROJECT NO. 103-269

DRAWING NO. S-07

SHEET NO. 04.07

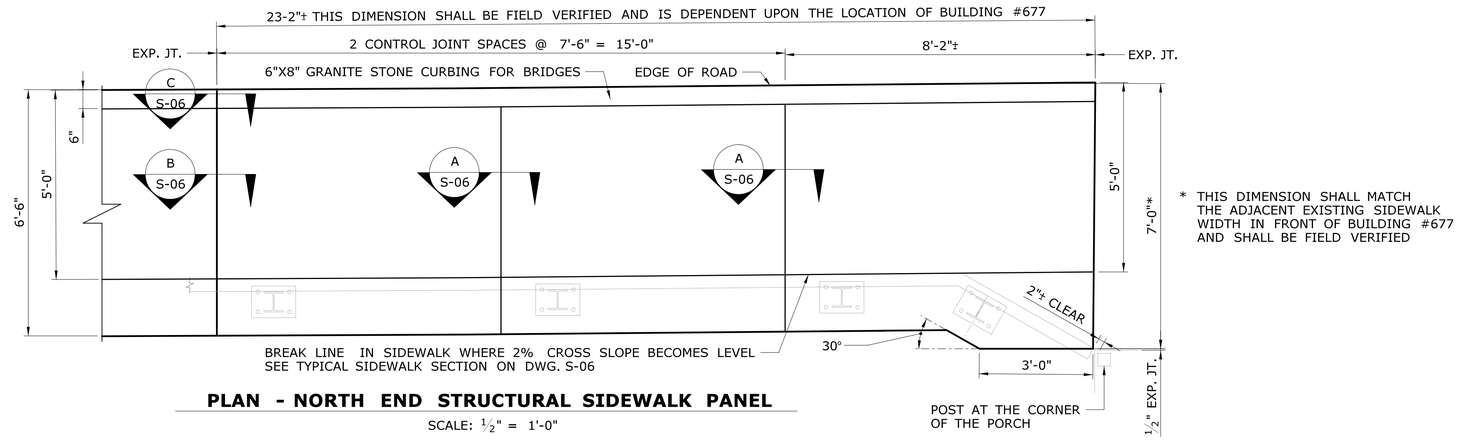

PLAN - NORTH END STRUCTURAL SIDEWALK PANEL

SCALE: ½" = 1'-0"

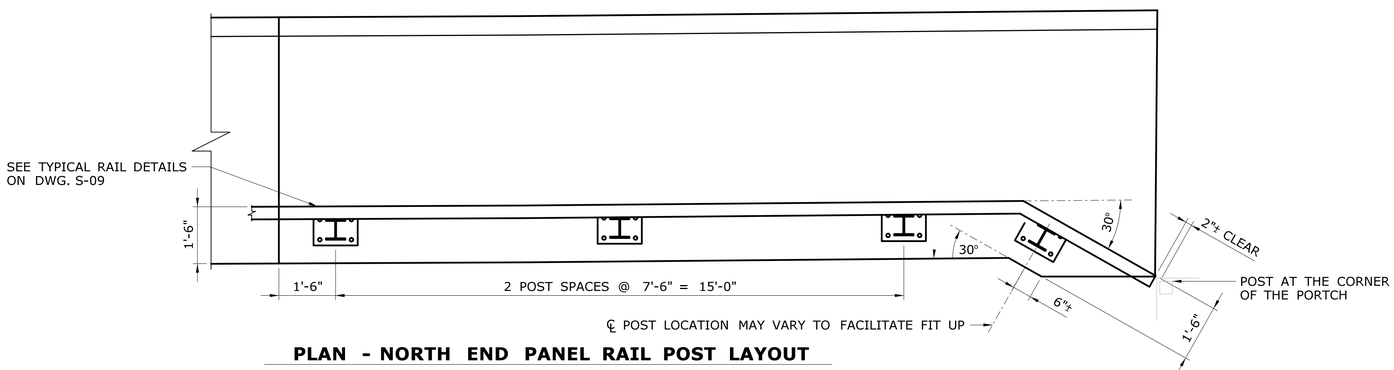

PLAN - NORTH END PANEL RAIL POST LAYOUT

SCALE: ½" = 1'-0"

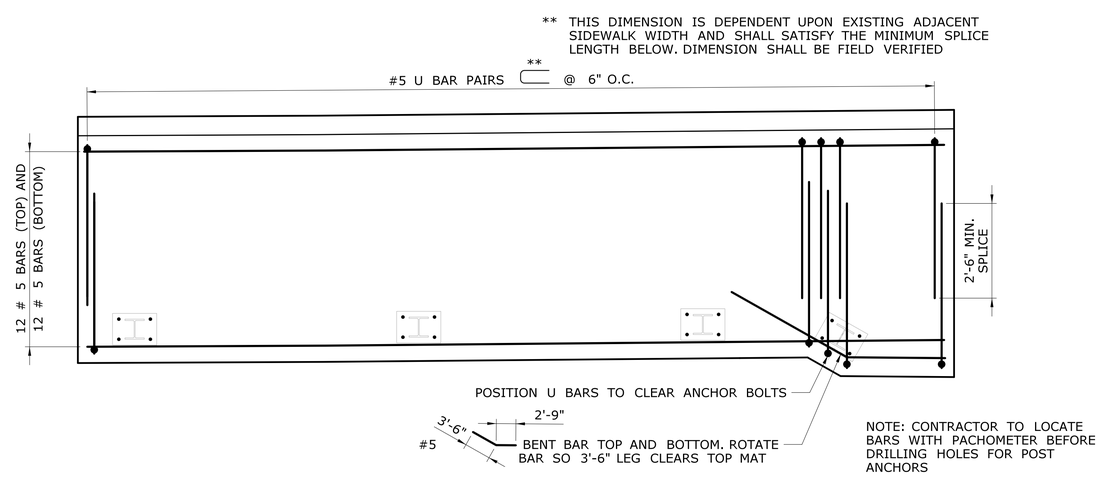

PLAN - NORTH END STRUCTURAL SIDEWALK PANEL REINFORCING

SCALE: ½" = 1'-0"

REV.	DATE	REVISION DESCRIPTION	SHEET NO.

THE INFORMATION, INCLUDING ESTIMATED QUANTITIES OF WORK, SHOWN ON THESE SHEETS IS BASED ON LIMITED INVESTIGATIONS BY THE STATE AND IS IN NO WAY WARRANTED TO INDICATE THE CONDITIONS OF ACTUAL QUANTITIES OF WORK WHICH WILL BE REQUIRED.

Plotted Date: 8/9/2017

DESIGNER/DRAFTER: LWC

CHECKED BY: JRH

SCALE AS NOTED

STATE OF CONNECTICUT
DEPARTMENT OF TRANSPORTATION

Filename: ...\08 - Structural Sidewalk Detials North End.dgn

SIGNATURE/BLOCK:
OFFICE OF ENGINEERING

APPROVED BY:

PROJECT TITLE:
RETAINING WALL FAILURE REMEDIATION ON ROUTE 12

TOWN: NORWICH

DRAWING TITLE:
STRUCTURAL SIDEWALK DETAILS NORTH END

PROJECT NO. 103-269

DRAWING NO. S-08

SHEET NO. 04.08

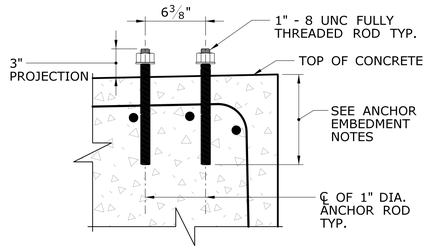

POST ANCHOR ASSEMBLY

SCALE: 1 1/2" = 1'-0"

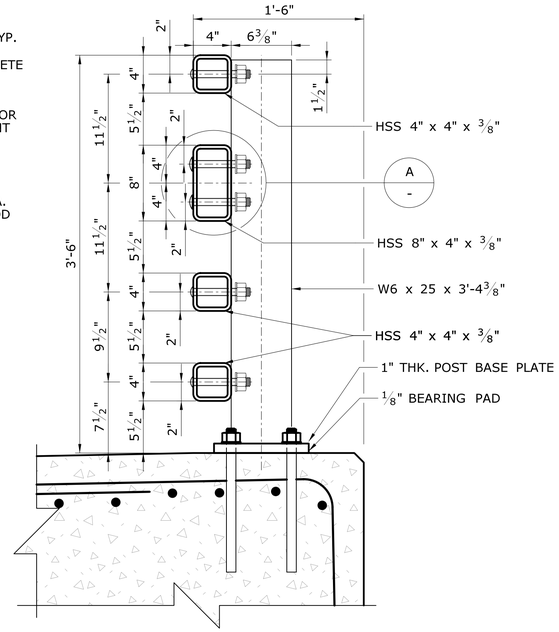

TYPICAL RAIL SECTION

SCALE: 1 1/2" = 1'-0"

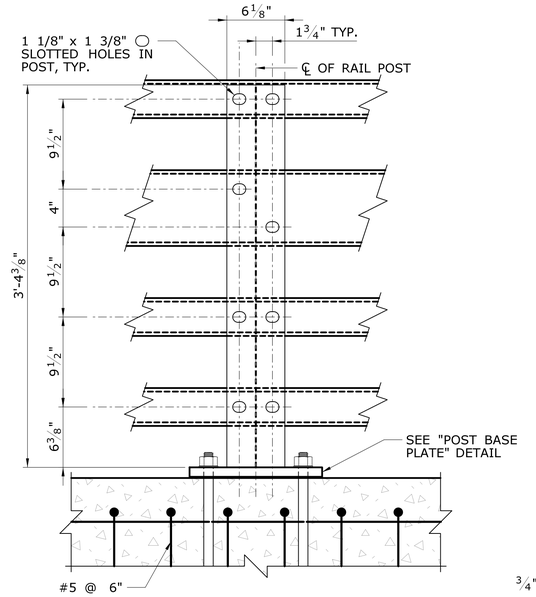

NOTE: NUTS AND BOLTS REMOVED FOR CLARITY

BACK ELEVATION VIEW

SCALE: 1 1/2" = 1'-0"

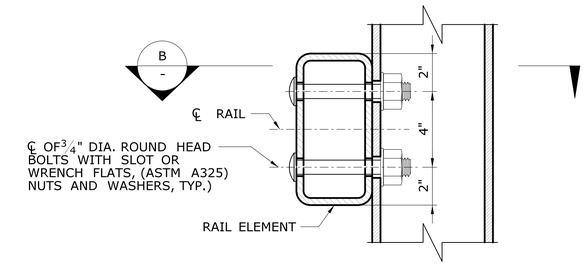

RAIL TO POST CONNECTION DETAIL

A
-

SCALE: 3" = 1'-0"

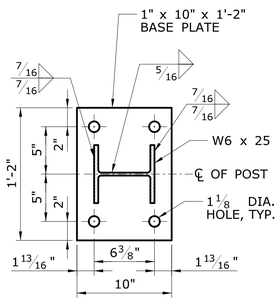

POST BASE PLATE

SCALE: 1 1/2" = 1'-0"

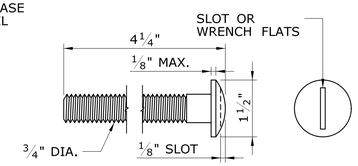

A325 ROUND HEAD BOLT

SCALE: 6" = 1'-0"

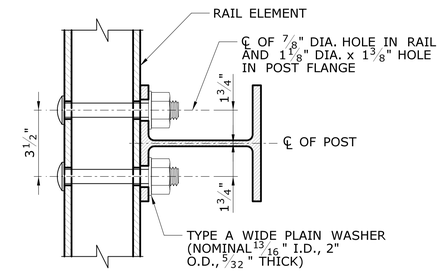

SECTION

B
-

SCALE: 3" = 1'-0"

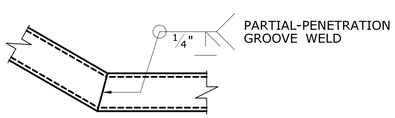

TYPICAL WELD CONNECTION AT END OF BRIDGE RAIL ELEMENTS

SCALE: 1 1/2" = 1'-0"

ANCHOR EMBEDMENT NOTES

1. ANCHOR BOLTS SHALL BE DRILLED AND GROUTED INTO THE CONCRETE WITH A CHEMICAL ANCHORING MATERIAL LISTED ON THE QUALIFIED PRODUCTS LIST.
2. DEPTH AND DIAMETER OF HOLE SHALL BE DETERMINED BY THE MANUFACTURER OF THE CHEMICAL ANCHORING MATERIAL TO DEVELOP THE FULL STRENGTH OF THE ANCHOR.

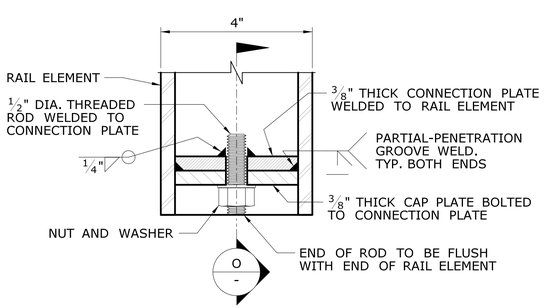

TYPICAL DETAIL - BRIDGE RAIL END

SCALE: 6" = 1'-0"

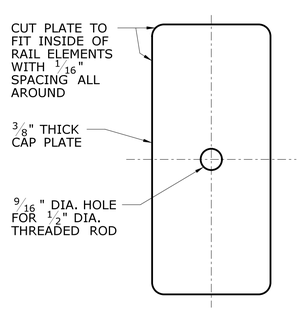

CAP PLATE

SCALE: 6" = 1'-0"

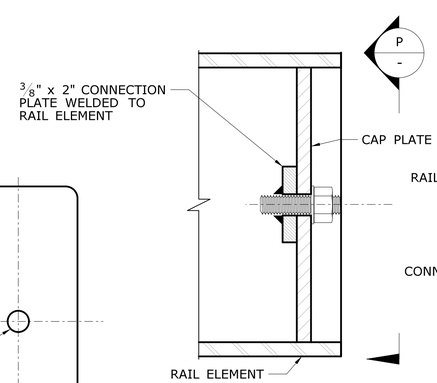

SECTION - RAIL END

O
-

SCALE: 6" = 1'-0"

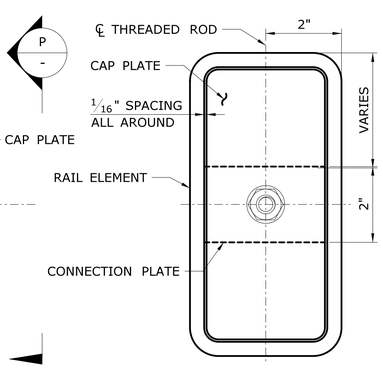

ELEVATION - RAIL END

P
-

SCALE: 6" = 1'-0"

RAIL NOTES

1. BRIDGE RAIL SHALL INCLUDE POSTS, BASE PLATES, ANCHOR RODS, PREFORMED PADS, RAIL ASSEMBLY BOLTS, NUTS, WASHERS, STUDS, STRUCTURAL TUBING, ALL APPURTENANCES AND GALVANIZING.
2. BRIDGE RAIL POSTS SHALL BE SET NORMAL (90 DEGREES) TO THE PROFILE GRADE, EXCEPT ON GRADES OVER 5% WHERE POSTS SHALL BE SET VERTICAL.
3. ENDS OF RAIL TUBE SECTION SHALL BE SAWED OR MILLED AND SHALL BE TRUE AND SMOOTH. ALL CUT, EDGES SHALL BE GROUND SMOOTH.
4. EACH PIECE OF RAIL TUBING SHALL BE ATTACHED TO A MINIMUM OF THREE POSTS.
5. BOLT HOLES SHALL BE DRILLED OR BUNCHED. FLAME CUTTING MAY BE USED TO FINISH SLOTTED HOLES, IF MECHANICALLY GUIDED.
6. MILL OR SHOP TRANSVERSE WELDS SHALL NOT BE PERMITTED ON ANY RAIL ELEMENT. RAIL ELEMENTS ON CURVES SHALL USE 3/8" WALL TUBES AND SHALL BE SHOP FORMED TO THE REQUIRED CURVATURE.
7. NO PUNCHING, DRILLING, CUTTING OR WELDING SHALL BE PERMITTED AFTER GALVANIZING. DAMAGED AREAS OF GALVANIZING SHALL BE THOROUGHLY CLEANED, PRETREATED, AND PAINTED WITH TWO COATS OF ORGANIC ZINC-RICH GALVANIZING REPAIR PAINT, HAVING MIN. 94% ZINC BY WEIGHT, TO A THICKNESS EQUAL TO THE ORIGINAL COATING ACCORDING TO THE STANDARD SPECIFICATIONS AND ASTM A780.
8. NUTS FOR 1" ANCHOR RODS SHALL BE TIGHTENED TO A SNUG FIT AND GIVE AN ADDITIONAL 1/8" TURN
9. THREADS FOR ANCHOR RODS MAY BE ROLLED OR CUT. IF CUT THREADS ARE USED, BOLT DIAMETER SHALL NOT BE LESS THAN NOMINAL DIAMETER. IF ROLLED THREADS ARE USED, ROD DIAMETER SHALL NOT BE LESS THAN ROOD DIAMETER OF THREADS.

MATERIAL NOTES

1. STRUCTURAL TUBING SHALL CONFORM TO THE REQUIREMENTS OF ASTM A500, GRADE B, STRUCTURAL STEEL TUBING. RAIL TUBING SHALL MEET THE LONGITUDINAL CHARPY V-NOTCH REQUIREMENTS OF 15 FT.LB. AT 0° F. FOR ASTM A500, GRADE B, THE TEST SAMPLES SHALL BE TAKEN AFTER FORMING THE TUBES.
2. RAIL POSTS AND BASE PLATES SHALL CONFORM TO THE REQUIREMENTS OF ASTM A572 GRADE 50.
3. RAIL BOLTS SHALL BE ASTM A325 OR A449. NUTS SHALL CONFORM TO ASTM A563 GRADE A OR BETTER. WASHERS SHALL BE HARDENED STEEL COMMERCIAL TYPE A PLAIN WIDE WASHERS AND SHALL MEET THE DIMENSIONAL REQUIREMENTS OF ANSI B18.22. ANCHOR RODS SHALL CONFORM TO ASTM A325 OR A449.
4. ALL STEEL COMPONENTS SHALL BE GALVANIZED AFTER FABRICATION IN CONFORMANCE TO AASHTO M323 (ASTM A153) AND AASHTO M111 (ASTM A123). THE GALVANIZING KETTLE SHALL HAVE 0.05 TO 0.09 PERCENT NICKEL. GALVANIZED SURFACES SHALL HAVE A UNIFORM APPEARANCE AND GALVANIZED MATERIAL SHALL BE PROPERLY STORED.
5. PREFORMED BEARING PADS (1/8" THICK) SHALL CONFORM TO AASHTO M251.
6. THIS BRIDGE RAIL SYSTEM WAS DEVELOPED FROM THE NEW HAMPSHIRE DOT'S T4 STEEL BRIDGE RAIL THAT WAS SUCCESSFULLY CRASH TESTED FOR AASHTO PL2 IN 1997 BY THE NEW ENGLAND TRANSPORTATION CONSORTIUM. THE ANCHORAGE IS MODIFIED TO ALLOW CHEMICAL ANCHORS.

REV.	DATE	REVISION DESCRIPTION	SHEET NO.

THE INFORMATION, INCLUDING ESTIMATED QUANTITIES OF WORK, SHOWN ON THESE SHEETS IS BASED ON LIMITED INVESTIGATIONS BY THE STATE AND IS IN NO WAY WARRANTED TO INDICATE THE CONDITIONS OF ACTUAL QUANTITIES OF WORK WHICH WILL BE REQUIRED.

Plotted Date: 8/9/2017

DESIGNER/DRAFTER: LWC
CHECKED BY: JRH
SCALE AS NOTED

STATE OF CONNECTICUT
DEPARTMENT OF TRANSPORTATION

Filename: ...\09 - Railing Details and Sectoins.dgn

SIGNATURE/BLOCK: OFFICE OF ENGINEERING
APPROVED BY:

PROJECT TITLE: RETAINING WALL FAILURE REMEDIATION ON ROUTE 12

TOWN: NORWICH

DRAWING TITLE: RAILING DETAILS AND SECTIONS

PROJECT NO. 103-269
DRAWING NO. S-09
SHEET NO. 04.09

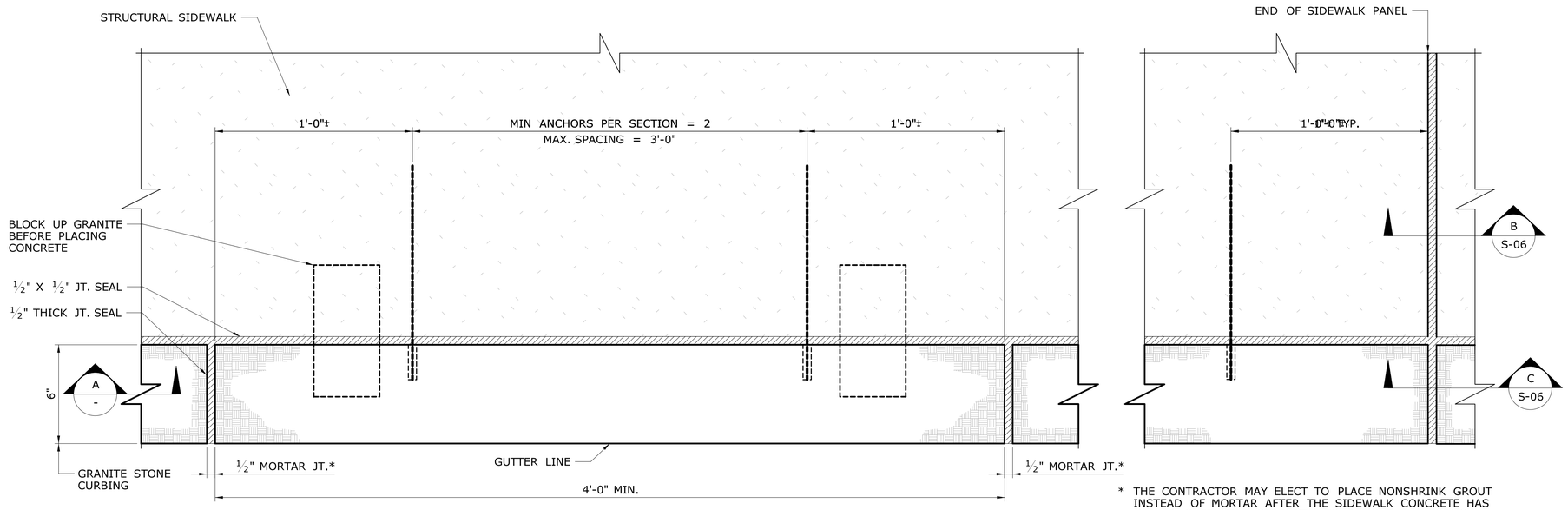

* THE CONTRACTOR MAY ELECT TO PLACE NONSHRINK GROUT INSTEAD OF MORTAR AFTER THE SIDEWALK CONCRETE HAS GAINED SUFFICIENT STRENGTH TO REMOVE THE FORMS. A ½" DEEP RECESS FOR SILICONE JOINT SEALANT MAY BE FORMED WITH CLOSED CELL BACKER ROD. AFTER THE GROUT HAS GAINED STRENGTH, THE BACKER ROD SHALL BE REMOVED AND SILICONE JOINT SEALANT APPLIED IN A WORKMAN LIKE MANNER IN ACCORDANCE WITH THE DETAILS SHOWN.

PLAN - GRANITE STONE CURBING

SCALE: 3" = 1'-0"

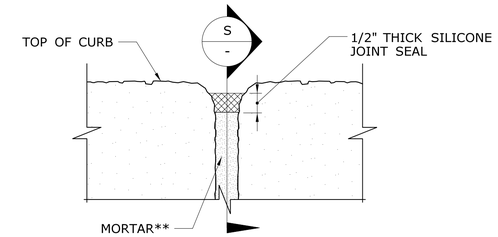

** MORTAR TO COMPLETELY FILL JOINT, EXCEPT LEAVE ROOM FOR ½" THICK SILICONE JOINT SEAL; SEE SECTION S BELOW.

SECTION - MORTAR JOINT IN GRANITE STONE CURBING

A / -

NOT TO SCALE

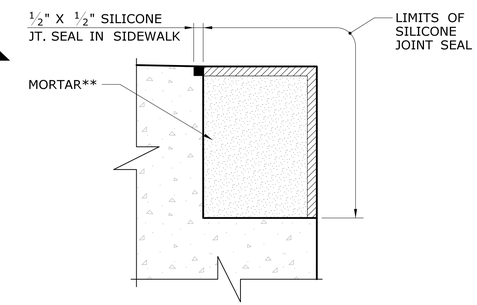

SECTION - MORTAR JOINT IN GRANITE STONE CURBING

S / -

SCALE: 3" = 1'-0"

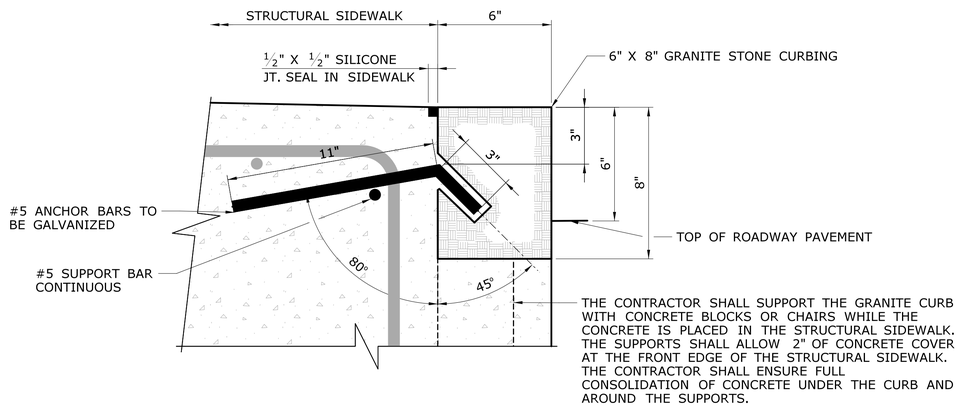

SECTION - TYPICAL GRANITE STONE CURBING

SCALE: 3" = 1'-0"

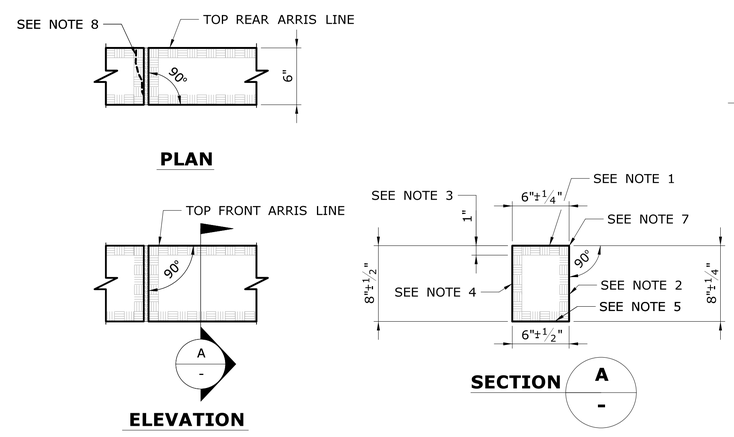

TOLERANCES - 6" GRANITE STONE CURBING FOR BRIDGES

SCALE: 1½" = 1'-0"

GRANITE STONE CURBING TOLERANCE NOTES

1. SAWED SURFACE APPROXIMATING A TRUE PLANE WITH NO PROJECTIONS OR DEPRESSIONS GREATER THAN ¼"
2. SMOOTH QUARRY SPLIT SURFACE, FREE OF DRILL HOLES WITH PROJECTIONS OR DEPRESSIONS NOT OVER ½"
3. NO PROJECTION OR DEPRESSION WITHIN THIS AREA GREATER THAN ¼"
4. SPLIT SURFACE SHALL BE FREE OF ANY PROJECTIONS OVER 1"
5. SAWED OR SPLIT SURFACE APPROXIMATING A TRUE PLANE TO THE SPECIFIED DIMENSIONS WITH PROJECTION NO GREATER THAN ¼"
6. SAWED SURFACE FREE OF ALL QUARRY SAWING AND CUTTING MARKS WITH ALLOWABLE DEPRESSIONS OR PROJECTIONS NOT OVER ¼"
7. THESE ARRIS LINES SHALL BE STRAIGHT AND TRUE WITHIN A ± TOLERANCE OF ¼"
8. ENDS OF STONES AT INTERMEDIATE JOINTS SHALL BE HELD FULL FOR 2" FROM ALL EXPOSED SURFACES WITH A PERMITTED VARIATION OF ¼". BEYOND THIS AREA THE JOINT MAY FALL AWAY A MAX. OF 3".

REV.	DATE	REVISION DESCRIPTION	SHEET NO.

THE INFORMATION, INCLUDING ESTIMATED QUANTITIES OF WORK, SHOWN ON THESE SHEETS IS BASED ON LIMITED INVESTIGATIONS BY THE STATE AND IS IN NO WAY WARRANTED TO INDICATE THE CONDITIONS OF ACTUAL QUANTITIES OF WORK WHICH WILL BE REQUIRED.

Plotted Date: 8/9/2017

DESIGNER/DRAFTER: LWC
CHECKED BY: JRH
SCALE AS NOTED

STATE OF CONNECTICUT
DEPARTMENT OF TRANSPORTATION

Filename: ...\10 - Granite Stone Curbing for Bridges.dgn

SIGNATURE/BLOCK:
OFFICE OF ENGINEERING
APPROVED BY:

PROJECT TITLE:
RETAINING WALL FAILURE REMEDIATION ON ROUTE 12

TOWN: NORWICH

DRAWING TITLE: GRANITE STONE CURBING FOR BRIDGES

PROJECT NO. 103-269
DRAWING NO. S-10
SHEET NO. 04.10