03-HIGHWAY
INDEX OF DRAWINGS

DRAWING NUMBER	DRAWING TITLE	DRAWING NUMBER	DRAWING TITLE
IND-01	INDEX OF DRAWINGS		
PLN-01	EXISTING CONDITIONS		
TYP-01	TYPICAL SECTIONS		
MDS-01 to MDS-12	MISCELLANEOUS DETAILS		
IGP-01	INTERSECTION GRADING PLAN		
HWY-01 TO HWY-02	ROADWAY PLAN		
DRN-01	DRAINAGE PLAN		
PRO-01 TO PRO-02	ROADWAY PROFILE		
XSC-01 TO XSC-09	ROADWAY CROSS SECTIONS		

DESIGNED BY:

BL Companies

BL COMPANIES, INC.
355 RESEARCH PARKWAY
MERIDEN, CT 06450

STATE OF CONNECTICUT MICHAEL G. FISHER No. 21170 LICENSED PROFESSIONAL ENGINEER

Digitally signed by Michael Fisher
Date: 2020.03.19 14:32:52-04'00'

REV.	DATE	REVISION DESCRIPTION	SHEET NO.
-	-	-	-
-	-	-	-
-	-	-	-
-	-	-	-
-	-	-	-
-	-	-	-

THE INFORMATION, INCLUDING ESTIMATED QUANTITIES OF WORK, SHOWN ON THESE SHEETS IS BASED ON LIMITED INVESTIGATIONS BY THE STATE AND IS IN NO WAY WARRANTED TO INDICATE THE CONDITIONS OF ACTUAL QUANTITIES OF WORK WHICH WILL BE REQUIRED.

Plotted Date: 3/19/2020

DESIGNER/DRAFTER: **JE**

CHECKED BY: **SB**

STATE OF CONNECTICUT
DEPARTMENT OF TRANSPORTATION

Filename: ...\HW_MSH_139-103_IND-01.dgn

SIGNATURE/ BLOCK:

BL Companies
BL COMPANIES, INC.
355 RESEARCH PARKWAY
MERIDEN, CT 06450

PROJECT TITLE:
RAILROAD-HIGHWAY GRADE CROSSING IMPROVEMENTS HARVEY LANE

TOWN: **SUFFIELD**

DRAWING TITLE: **INDEX OF HIGHWAY DRAWINGS**

PROJECT NO. **139-103**

DRAWING NO. **IND-01**

SHEET NO. **03.01**

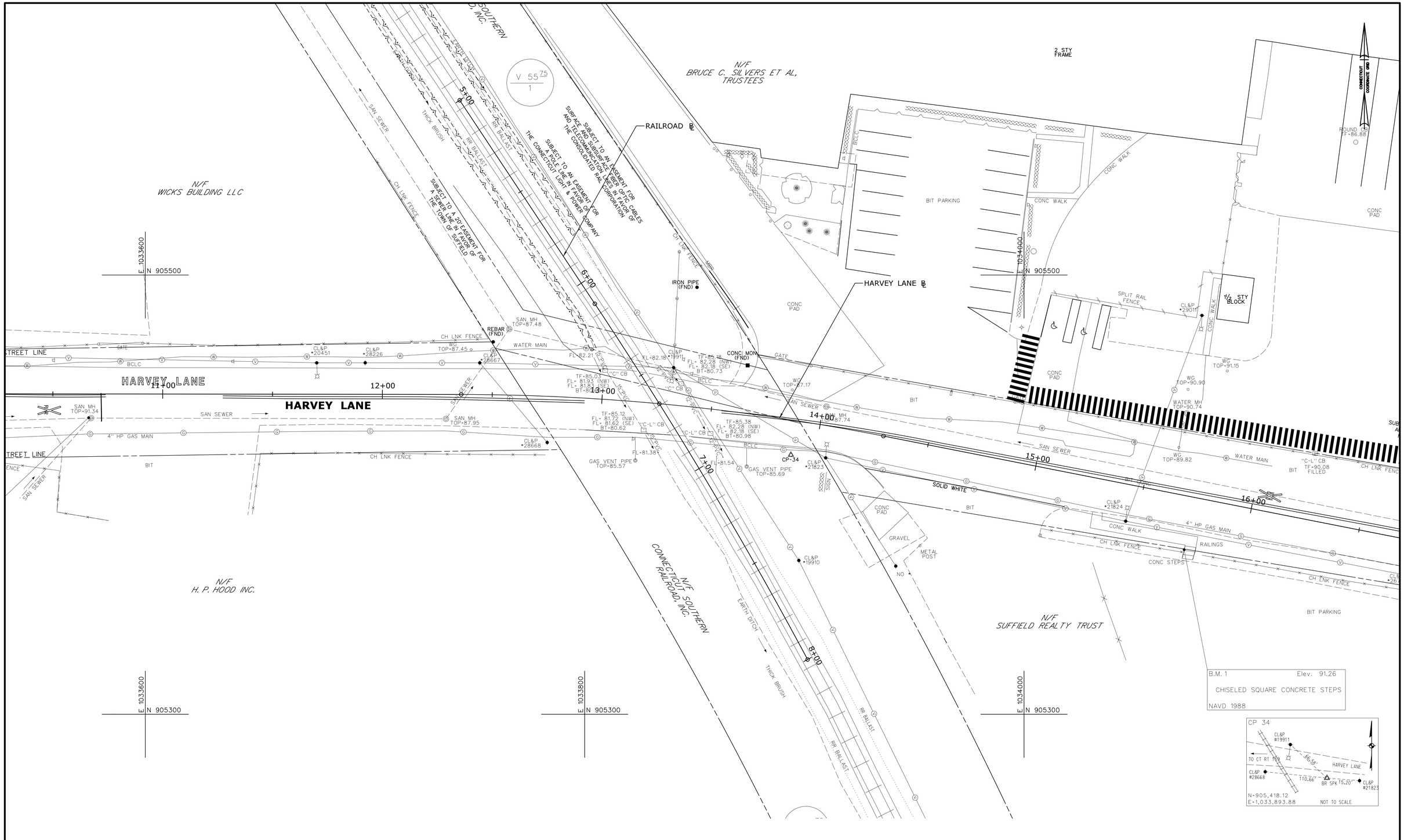

REV.	DATE	REVISION DESCRIPTION	SHEET NO.

THE INFORMATION, INCLUDING ESTIMATED QUANTITIES OF WORK, SHOWN ON THESE SHEETS IS BASED ON LIMITED INVESTIGATIONS BY THE STATE AND IS IN NO WAY WARRANTED TO INDICATE THE CONDITIONS OF ACTUAL QUANTITIES OF WORK WHICH WILL BE REQUIRED.

Plotted Date: 3/19/2020

DESIGNER/DRAFTER: **JE**

CHECKED BY: **SB**

SCALE IN FEET 0 20 40

SCALE 1"=20'

STATE OF CONNECTICUT
DEPARTMENT OF TRANSPORTATION

Filename: ...\HW_MSH_139-103_PLN-01.dgn

SIGNATURE/ BLOCK:

STATE OF CONNECTICUT
JOHN T. MORRIS
No. 24194
LICENSED PROFESSIONAL ENGINEER

BL Companies
BL COMPANIES, INC.
355 RESEARCH PARKWAY
MERIDEN, CT 06450

PROJECT TITLE:

RAILROAD-HIGHWAY GRADE CROSSING IMPROVEMENTS HARVEY LANE

TOWN: **SUFFIELD**

DRAWING TITLE: **EXISTING CONDITIONS**

PROJECT NO. **139-103**

DRAWING NO. **PLN-01**

SHEET NO. **03.02**

LEGEND FOR TYPICAL SECTIONS

- (A) POINT OF APPLIED GRADE
- (B) 4" HMA S0.5 TRAFFIC LEVEL 2 (PLACED IN TWO EQUAL LIFTS)
- (C) 3" HMA S1.0 TRAFFIC LEVEL 2
- (D) 12" PROCESSED AGGREGATE BASE
- (E) FORMATION OF SUBGRADE
- (F) BITUMINOUS CONCRETE LIP CURBING (B.C.L.C.)
- (G) 4" TOPSOIL AND TURF ESTABLISHMENT

NOTE:

1. "MATERIAL FOR TACK COAT" SHALL BE APPLIED PER SECTION 4.06 - BITUMINOUS CONCRETE OF THE SPECIAL PROVISIONS.

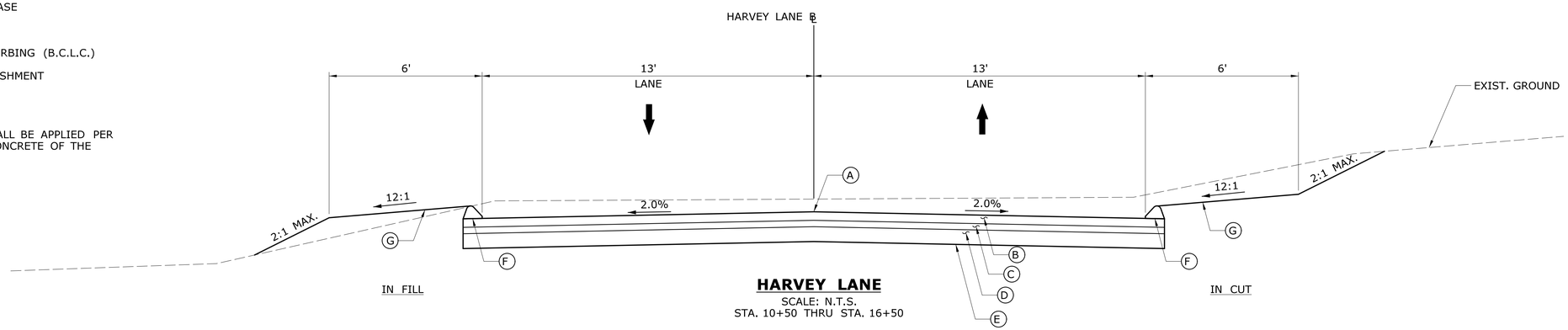

HARVEY LANE
SCALE: N.T.S.
STA. 10+50 THRU STA. 16+50

REV.	DATE	REVISION DESCRIPTION	SHEET NO.

THE INFORMATION, INCLUDING ESTIMATED QUANTITIES OF WORK, SHOWN ON THESE SHEETS IS BASED ON LIMITED INVESTIGATIONS BY THE STATE AND IS IN NO WAY WARRANTED TO INDICATE THE CONDITIONS OF ACTUAL QUANTITIES OF WORK WHICH WILL BE REQUIRED.

Plotted Date: 3/19/2020

DESIGNER/DRAFTER: JE
CHECKED BY: KR
SCALE AS NOTED

STATE OF CONNECTICUT
DEPARTMENT OF TRANSPORTATION

Filename: ...\HW_MSH_139-103_TYP_01.dgn

SIGNATURE/BLOCK:

BL Companies
BL COMPANIES, INC.
355 RESEARCH PARKWAY
MERIDEN, CT 06450

PROJECT TITLE:
RAILROAD-HIGHWAY GRADE CROSSING IMPROVEMENTS HARVEY LANE

TOWN: **SUFFIELD**

DRAWING TITLE: **TYPICAL SECTIONS**

PROJECT NO. **139-103**
DRAWING NO. **TYP-01**
SHEET NO. **03.03**

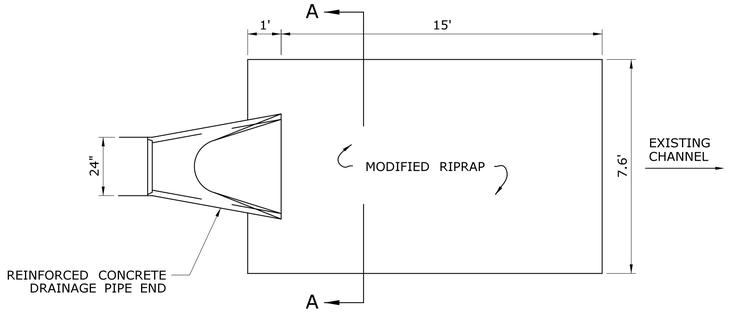

PLAN VIEW

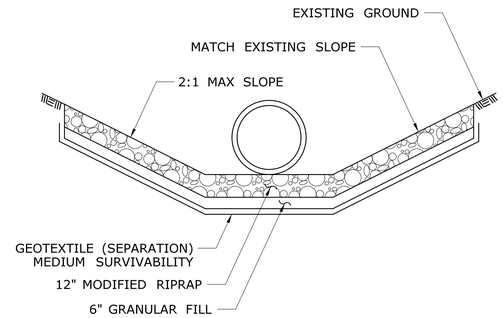

SECTION A-A

TYPE C RIPRAP APRON

SCALE: N.T.S.

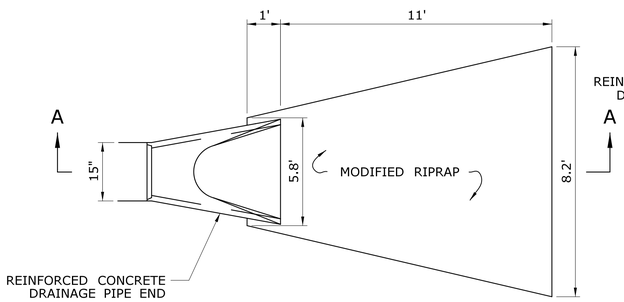

PLAN VIEW

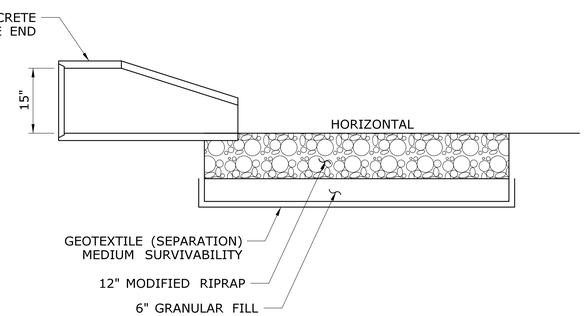

SECTION A-A

TYPE B RIPRAP APRON

SCALE: N.T.S.

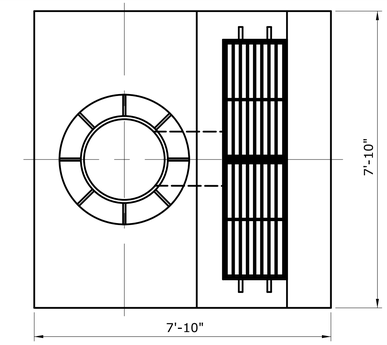

PLAN

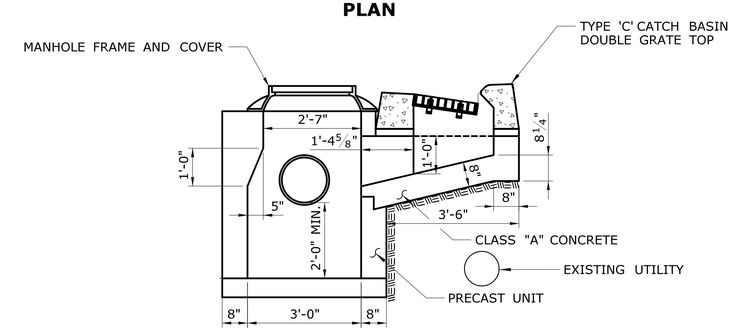

SPECIAL TYPE 'C' CATCH BASIN DOUBLE GRATE TYPE 2

SCALE: N.T.S.

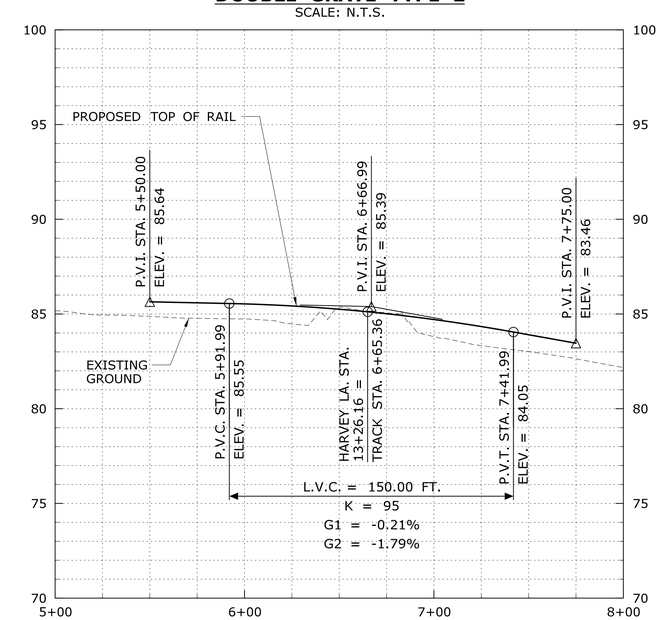

TOP OF RAIL PROFILE

SCALE: N.T.S.

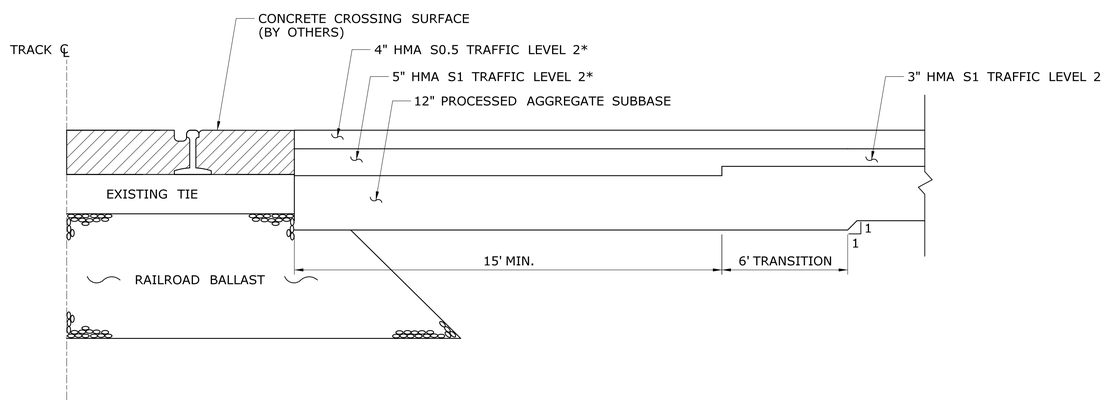

TYPICAL HALF SECTION THROUGH CONCRETE CROSSING SURFACE

SCALE: N.T.S.

* PLACED IN TWO EQUAL LIFTS

REV.	DATE	REVISION DESCRIPTION	SHEET NO.

THE INFORMATION, INCLUDING ESTIMATED QUANTITIES OF WORK, SHOWN ON THESE SHEETS IS BASED ON LIMITED INVESTIGATIONS BY THE STATE AND IS IN NO WAY WARRANTED TO INDICATE THE CONDITIONS OF ACTUAL QUANTITIES OF WORK WHICH WILL BE REQUIRED.

Plotted Date: 3/19/2020

DESIGNER/DRAFTER: JE

CHECKED BY: SB

SCALE AS NOTED

STATE OF CONNECTICUT
DEPARTMENT OF TRANSPORTATION

Filename: ..\HW_MSH_139-103_MDS_01.dgn

SIGNATURE/BLOCK:

BL Companies
BL COMPANIES, INC.
355 RESEARCH PARKWAY
MERIDEN, CT 06450

PROJECT TITLE:
RAILROAD-HIGHWAY GRADE CROSSING IMPROVEMENTS HARVEY LANE

TOWN: **SUFFIELD**

DRAWING TITLE: **MISCELLANEOUS DETAILS**

PROJECT NO. **139-103**

DRAWING NO. **MDS-01**

SHEET NO. **03.04**

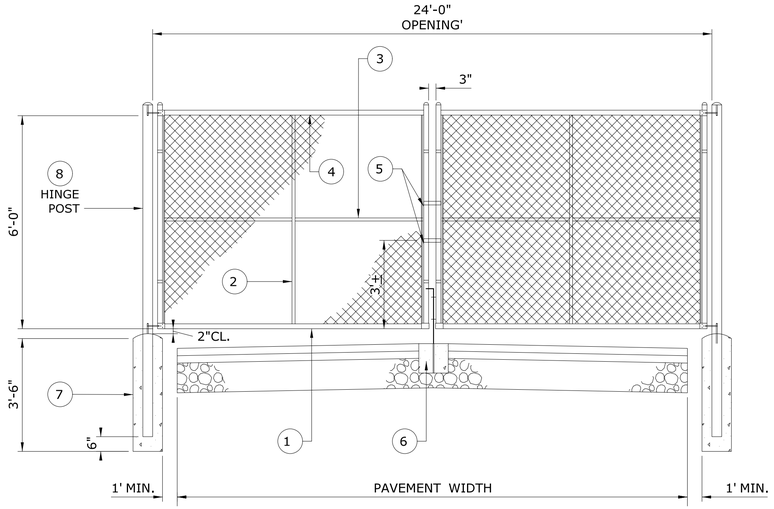

LEGEND

1. 2" SQUARE FRAME WELDED TO FORM FOUR SIDES OF LEAF
2. 1 1/4" SQUARE UPRIGHT BRACING WELDED TO FRAME
3. 1 1/4" SQUARE HORIZONTAL BRACING WELDED TO FRAME
4. TENSION BAR ATTACHED TO FRAME ON ALL FOUR SIDES WITH HOOK BOLTS
5. PADLOCK AND LATCH DEVICE
6. 12" DIA. x 12" DEEP CONC. COLLAR WITH STEEL PIPE FOR SET PIN. COLLAR AND PIPE SET FLUSH WITH PAVEMENT. PIPE TO DRAIN INTO GRAVEL BASE.
7. HINGE POST FOOTING SHALL BE 3000 PSI CONCRETE. DIAMETER SHALL BE 4 TIMES POST WIDTH (MIN.)
8. SEE GATE TABLE

GATE TABLE	
OPENING	**HINGE POST**
8'-0" - 12'-0"	2 1/2" SQUARE
14'-0" - 24'-0"	3" SQUARE
26'-0" - 36'-0"	6" SQUARE
38'-0" - 40'-0"	8" SQUARE

24' CHAIN LINK DOUBLE GATE 6' HIGH

SCALE: N.T.S.

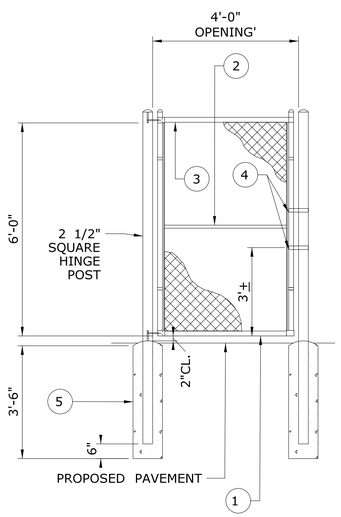

LEGEND

1. 2" SQUARE FRAME WELDED TO FORM FOUR SIDES OF LEAF
2. 1 1/4" SQUARE HORIZONTAL BRACING WELDED TO FRAME
3. TENSION BAR ATTACHED TO FRAME ON ALL FOUR SIDES WITH HOOK BOLTS
4. PADLOCK AND LATCH DEVICE
5. HINGE POST FOOTING SHALL BE 3000 PSI CONCRETE. DIAMETER SHALL BE 4 TIMES POST WIDTH (MIN.)

4' CHAIN LINK GATE 6' HIGH

SCALE: N.T.S.

REV.	DATE	REVISION DESCRIPTION	SHEET NO.

THE INFORMATION, INCLUDING ESTIMATED QUANTITIES OF WORK, SHOWN ON THESE SHEETS IS BASED ON LIMITED INVESTIGATIONS BY THE STATE AND IS IN NO WAY WARRANTED TO INDICATE THE CONDITIONS OF ACTUAL QUANTITIES OF WORK WHICH WILL BE REQUIRED.

Plotted Date: 3/19/2020

DESIGNER/DRAFTER: JE

CHECKED BY: SB

SCALE AS NOTED

STATE OF CONNECTICUT
DEPARTMENT OF TRANSPORTATION

Filename: ...\HW_MSH_139-103_MDS_02.dgn

SIGNATURE/ BLOCK:

BL Companies
BL COMPANIES, INC.
355 RESEARCH PARKWAY
MERIDEN, CT 06450

PROJECT TITLE:
RAILROAD-HIGHWAY GRADE CROSSING IMPROVEMENTS HARVEY LANE

TOWN: **SUFFIELD**

DRAWING TITLE: **MISCELLANEOUS DETAILS**

PROJECT NO. **139-103**

DRAWING NO. **MDS-02**

SHEET NO. **03.05**

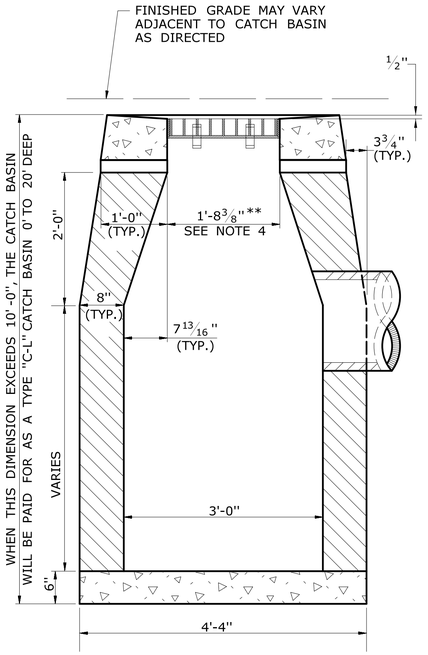

SECTION B

TYPE "C-L" CATCH BASIN

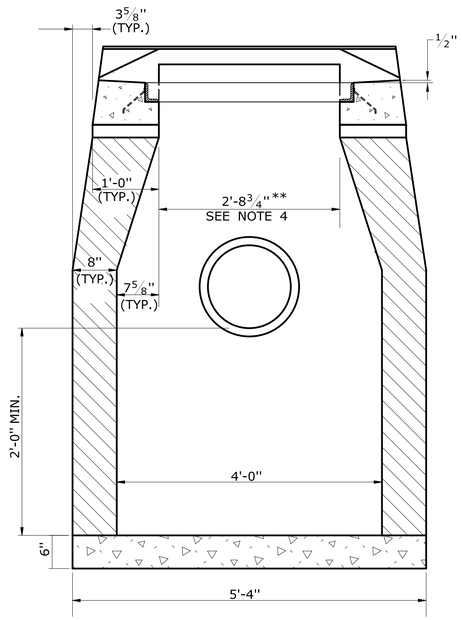

SECTION A

TYPE "C" & "C-L" CATCH BASIN (TYPE "C" TOP SHOWN)

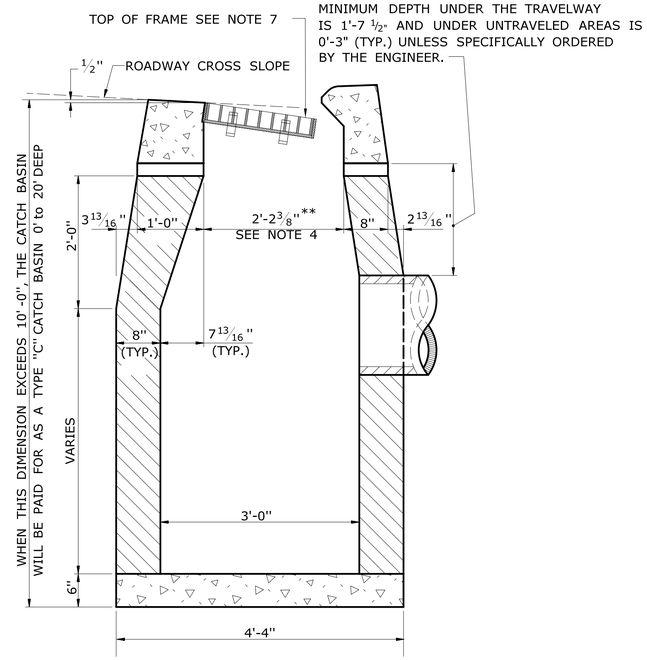

SECTION B

TYPE "C" CATCH BASIN

GENERAL NOTES:

1. FOR CATCH BASIN TOPS, SEE DRAWING NO. DGS-07.
2. ALL FACES OF STRUCTURES IN CONTACT WITH CONCRETE PAVEMENT SHALL BE COVERED WITH A LAYER OF TAR PAPER OR APPROVED EQUAL.
3. USE 6'-0" ON UPGRADE SIDE (SEE PLAN VIEW) OF CONTINUOUS GRADE AND 1'-0" ON DOWNGRADE SIDE OF CONTINUOUS GRADE OR AS DIRECTED BY THE ENGINEER.
4. IF MASONRY UNITS ARE REQUIRED, THE BASIN SHALL BE CONSTRUCTED IN CONFORMANCE WITH THE DIMENSIONS SHOWN. CORBELLING SHALL BE PERMITTED TO A MAXIMUM OF 3". NO PROJECTION SHALL EXTEND INSIDE THE LIMITS FOR THE CATCH BASIN OPENINGS SHOWN IN THE SECTION VIEWS **.
5. WALL THICKNESS OF ALL CATCH BASINS OVER 10' DEEP SHALL BE INCREASED TO 12" THICK. INSIDE DIMENSION SHALL REMAIN THE SAME. 12" THICKNESS SHALL START AFTER THE FIRST 10'.
6. SPACERS CAN BE EITHER CONCRETE MASONRY UNIT OR PRECAST WITH THE REQUIRED REINFORCING (RECOMMENDED BY THE MANUFACTURER) AS NEEDED TO PROVIDE THE PROPER GRADE SHOWN ON THE PLANS.
7. TOP OF FRAME ELEVATION SHALL BE MEASURED IN THE CENTER OF GRATE AT GUTTER LINE.

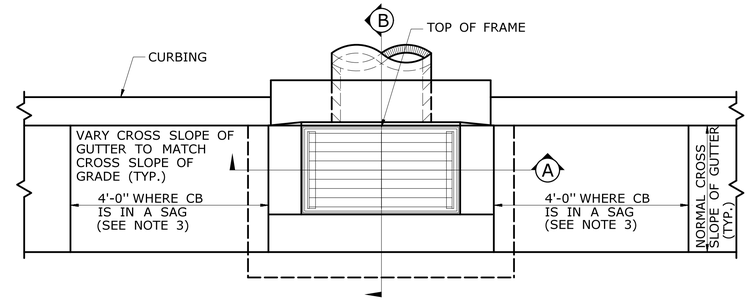

PLAN

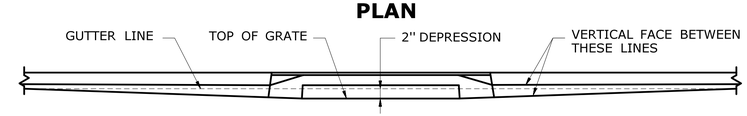

CATCH BASINS IN A LINE WITH 4" CONCRETE PARK CURBING OR 4" BITUMINOUS CONCRETE PARK CURBING

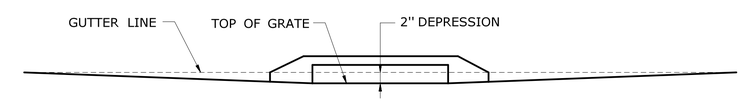

CATCH BASINS WHERE NO CURBING OF ANY TYPE EXISTS OR IS PROPOSED

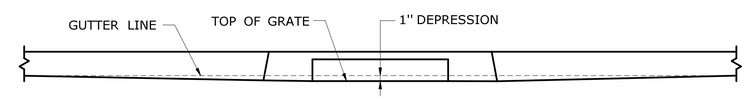

CATCH BASINS IN A LINE WITH 6" CONCRETE CURBING OR 6" STONE CURBING

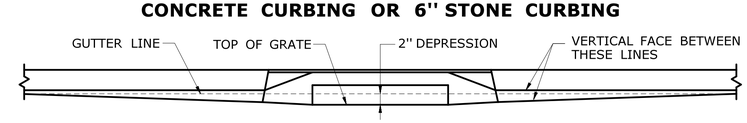

CATCH BASINS IN A LINE WITH 6" BITUMINOUS CONCRETE LIP CURBING (MACHINE FORMED)

DETAILS OF DEPRESSED GUTTER STRIP FOR TYPE "C" CATCH BASIN

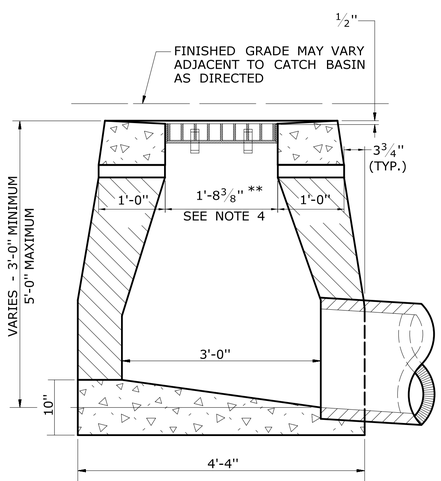

SECTION B

TYPE "C-L" DROP INLET

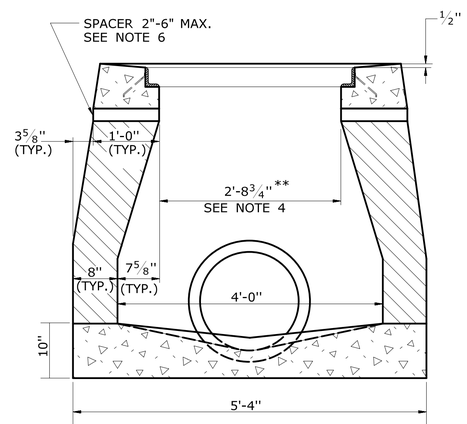

SECTION A

TYPE "C" & "C-L" DROP INLET (TYPE "C-L" TOP SHOWN)

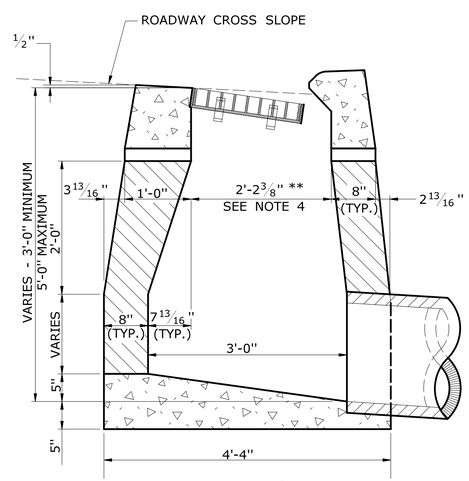

SECTION B

TYPE "C" DROP INLET

REV.	DATE	REVISION DESCRIPTION	SHEET NO.

THE INFORMATION, INCLUDING ESTIMATED QUANTITIES OF WORK, SHOWN ON THESE SHEETS IS BASED ON LIMITED INVESTIGATIONS BY THE STATE AND IS IN NO WAY WARRANTED TO INDICATE THE CONDITIONS OF ACTUAL QUANTITIES OF WORK WHICH WILL BE REQUIRED.

Plotted Date: 3/19/2020

DESIGNER/DRAFTER: CM

CHECKED BY: MF

STATE OF CONNECTICUT
DEPARTMENT OF TRANSPORTATION

Filename: ...\CTDOT_HIGHWAY_GD [6-11-19].dgn

SIGNATURE/BLOCK:

STATE OF CONNECTICUT LICENSED PROFESSIONAL ENGINEER

BL Companies
BL COMPANIES, INC.
355 RESEARCH PARKWAY
MERIDEN, CT 06450

PROJECT TITLE:
RAILROAD-HIGHWAY GRADE CROSSING IMPROVEMENTS HARVEY LANE

TOWN: **SUFFIELD**

DRAWING TITLE:
CATCH BASIN AND DROP INLET TYPES

PROJECT NO. **139-103**

DRAWING NO. **MDS-03**

SHEET NO. **03.06**

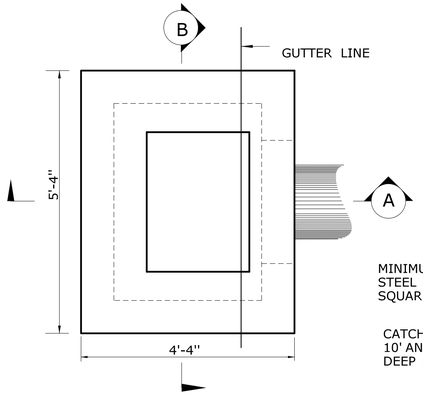

PLAN

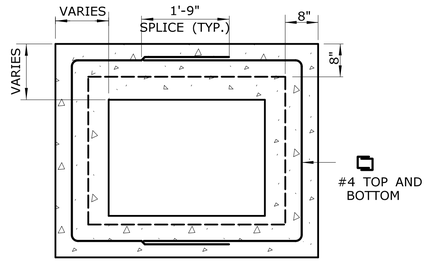

REDUCER SECTION (TYP.)

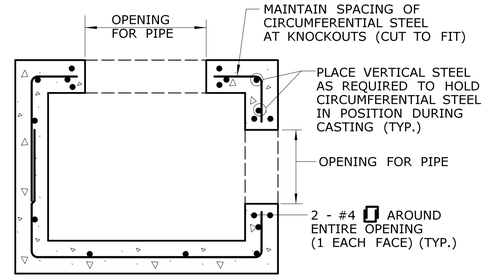

TYPICAL SECTION THROUGH RISER WITH OPENING

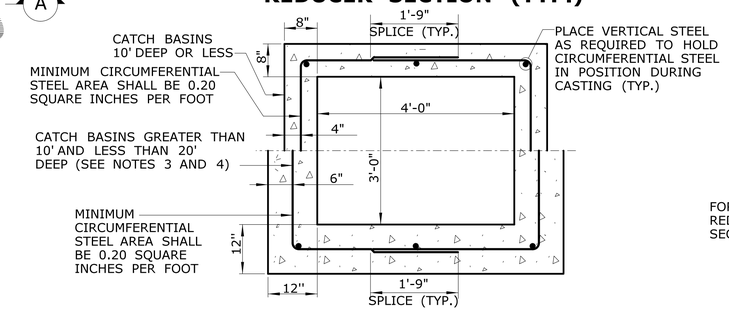

RISER SECTION (TYP.)

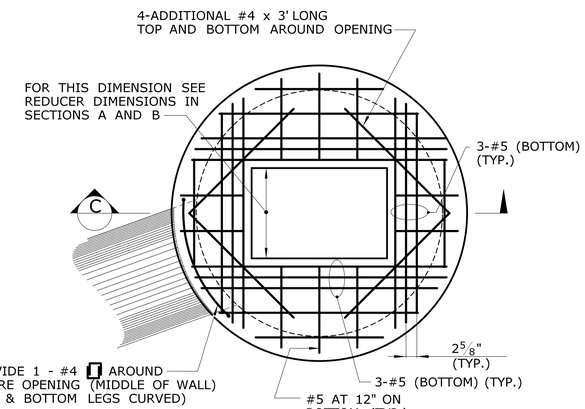

PLAN

(SEE NOTE 9)

GENERAL NOTES:

1. WELDED WIRE FABRIC WITH AN AREA EQUAL TO OR GREATER THAN THE REINFORCING SHOWN MAY BE SUBSTITUTED AS APPROVED BY THE ENGINEER.
2. ALL REINFORCEMENT SHALL HAVE A MINIMUM CLEAR COVER OF 2 INCHES, EXCEPT FOR BENEATH BOTTOM REINFORCEMENT IN TOP SLABS, WHERE THE MINIMUM MAY BE 1½ INCHES.
3. WALL THICKNESS OF ALL CATCH BASINS OVER 10 FEET DEEP SHALL BE INCREASED TO 12 INCHES. INSIDE DIMENSIONS SHALL REMAIN THE SAME. THE 12 INCH THICKNESS SHALL START AFTER THE FIRST 10 FEET.
4. BASES AND RISERS AT A DEPTH OF 20 FEET AND GREATER SHALL BE DESIGNED BY THE CONTRACTOR AND WORKING DRAWINGS SHALL BE SUBMITTED TO THE ENGINEER FOR REVIEW.
5. RISERS MAY BE PREFABRICATED WITH PIPE OPENINGS IN ALL FOUR WALLS. ADEQUATE REINFORCING AROUND PIPE OPENINGS SHALL BE PROVIDED. RISERS USED WHERE A PIPE OPENING IS TO REMAIN IN PLACE MUST BE FORMED UP WITH BRICK AS DIRECTED BY THE ENGINEER.
6. RISERS SHALL NEVER HAVE CORNER PIPE ENTRIES. ROUND STRUCTURES SHALL BE USED WHEN PIPES CANNOT ALIGN WITH A RECTANGULAR STRUCTURE KNOCKOUT.
7. SHRINKAGE AND TEMPERATURE REINFORCEMENT SHALL BE PROVIDED IN THE TOPS OF SLABS. THE TOTAL AREA OF REINFORCEMENT PROVIDED SHALL BE AT LEAST 0.125 SQUARE INCHES PER FOOT IN EACH DIRECTION. THE MAXIMUM SPACING OF THIS REINFORCEMENT SHALL NOT EXCEED 18 INCHES.
8. THE DETAILS SHOWN IN THE PLAN VIEW FOR PRECAST CONCRETE ROUND STRUCTURES SHALL ALSO BE USED FOR CONVERTING MANHOLES TO CATCH BASINS.
9. FOR CATCH BASIN TOPS, SEE DRAWING NO. DGS-07 FOR RECTANGULAR OPENING OR DRAWING NOS. DGS-10a,10b OR 10c FOR CIRCULAR OPENING.

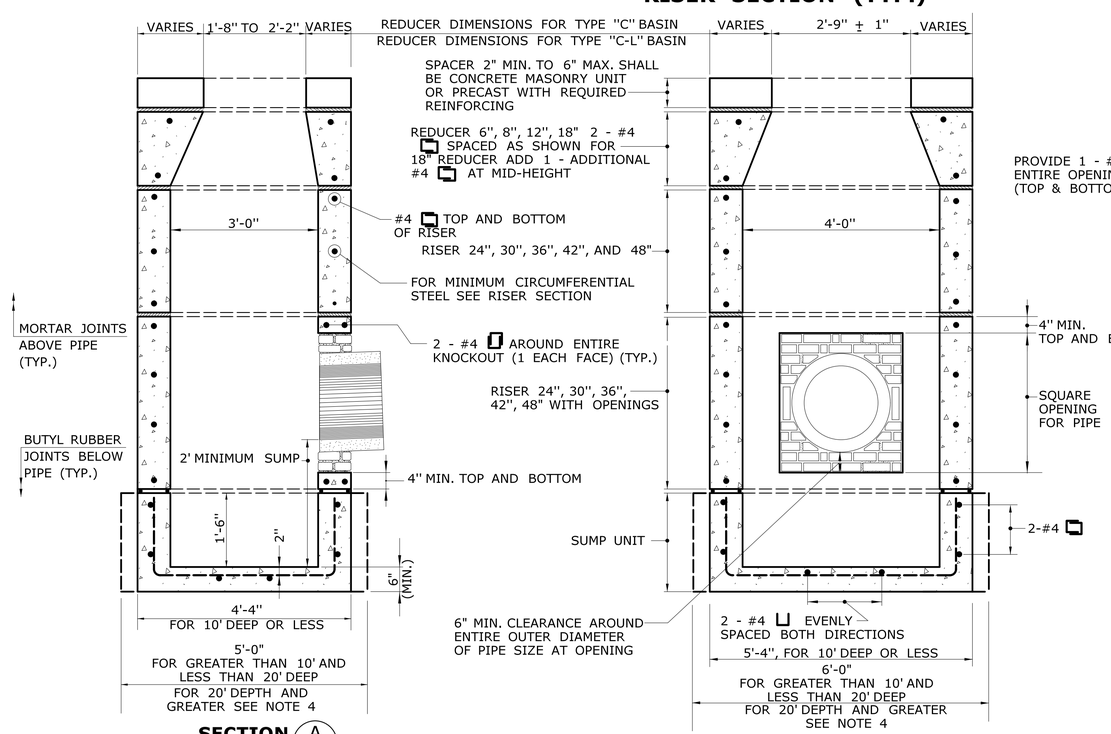

PRECAST CONCRETE TYPE "C" AND "C-L" CATCH BASIN

(UNDER 10' DEEP SHOWN)

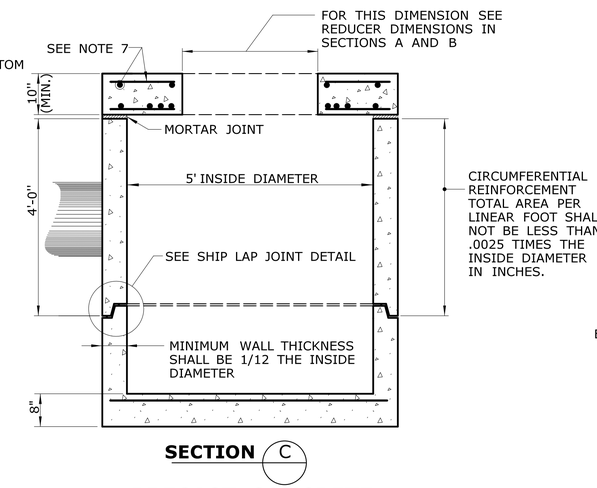

PRECAST CONCRETE TYPE "C" AND "C-L" ROUND STRUCTURE

(SEE NOTE 6)

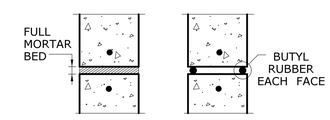

MORTAR JOINT DETAIL **BUTYL RUBBER JOINT DETAIL**

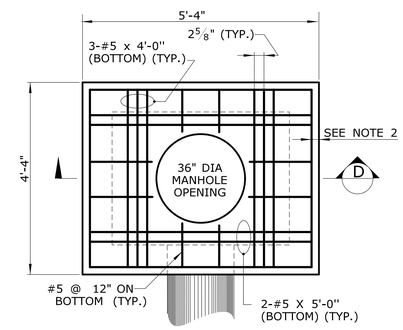

PLAN

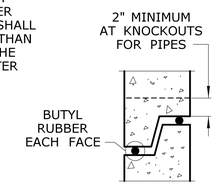

SHIP LAP JOINT DETAIL

(FOR USE WITH ROUND STRUCTURES ONLY)

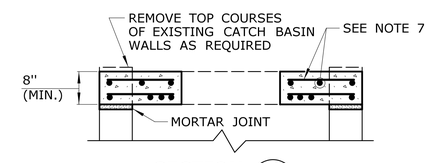

SECTION D

TOP SLAB TO CONVERT CATCH BASIN TO MANHOLE

REV.	DATE	REVISION DESCRIPTION	SHEET NO.
1.	5/19	REVISED MANHOLE DIA IN PLAN VIEW	

THE INFORMATION, INCLUDING ESTIMATED QUANTITIES OF WORK, SHOWN ON THESE SHEETS IS BASED ON LIMITED INVESTIGATIONS BY THE STATE AND IS IN NO WAY WARRANTED TO INDICATE THE CONDITIONS OF ACTUAL QUANTITIES OF WORK WHICH WILL BE REQUIRED.

Plotted Date: 3/19/2020

DESIGNER/DRAFTER: CM

CHECKED BY: MF

STATE OF CONNECTICUT
DEPARTMENT OF TRANSPORTATION

Filename: ...\CTDOT_HIGHWAY_GD [6-11-19].dgn

SIGNATURE/BLOCK:

STATE OF CONNECTICUT PROFESSIONAL ENGINEER

BL Companies
BL COMPANIES, INC.
355 RESEARCH PARKWAY
MERIDEN, CT 06450

PROJECT TITLE:
RAILROAD-HIGHWAY GRADE CROSSING IMPROVEMENTS HARVEY LANE

TOWN: **SUFFIELD**

DRAWING TITLE: **PRECAST CATCH BASIN & ROUND STRUCTURE**

PROJECT NO. **139-103**

DRAWING NO. **MDS-04**

SHEET NO. **03.07**

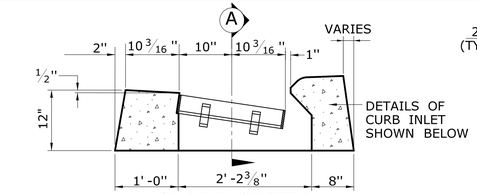

CROSS SECTION

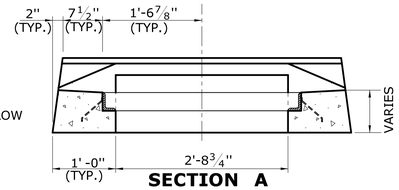

SECTION A

TYPE "C" CATCH BASIN TOP

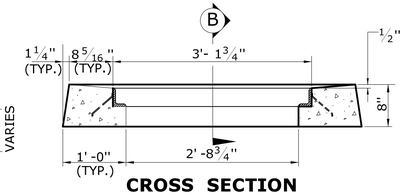

CROSS SECTION

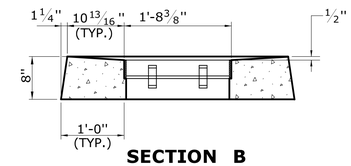

SECTION B

TYPE "C-L" CATCH BASIN TOP

GENERAL NOTES:

1. FOR DETAILS OF FRAMES AND GRATES, SEE DRAWING NO. DGS-08.
2. ALL BARS SHALL HAVE A MINIMUM 2" COVER.

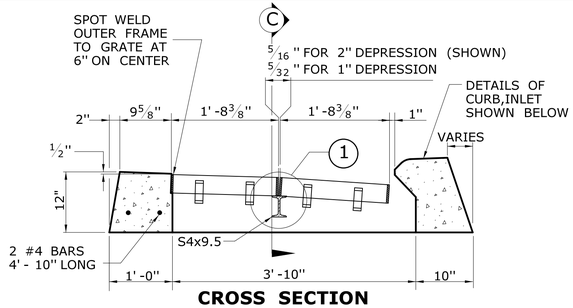

CROSS SECTION

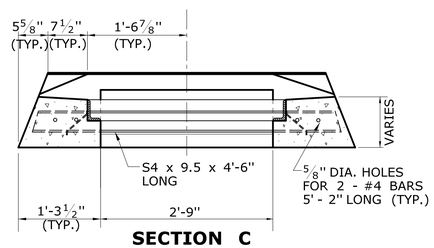

SECTION C

TYPE "C" CATCH BASIN DOUBLE GRATE - TYPE I TOP

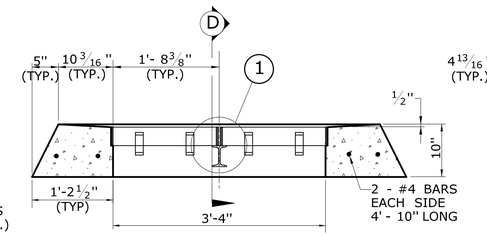

CROSS SECTION

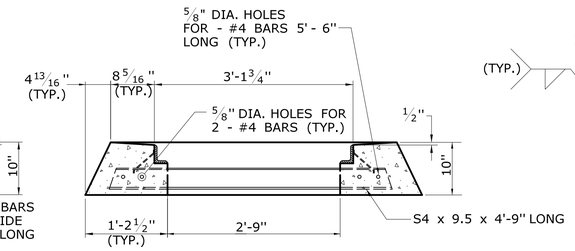

SECTION D

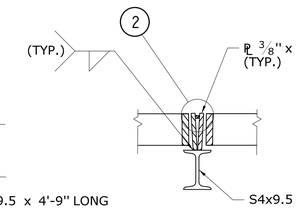

DETAIL "1"

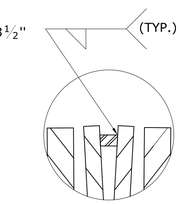

DETAIL "2"

TYPE "C-L" CATCH BASIN DOUBLE GRATE - TYPE I TOP

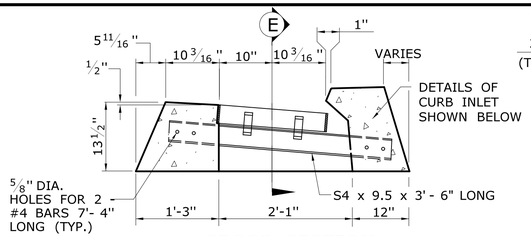

CROSS SECTION

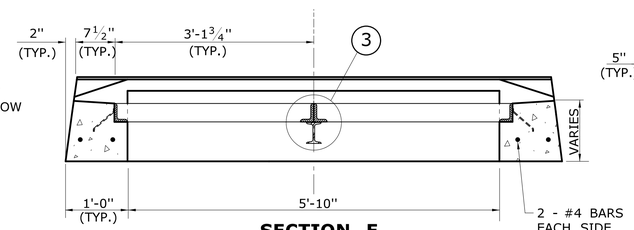

SECTION E

TYPE "C" CATCH BASIN DOUBLE GRATE - TYPE II TOP

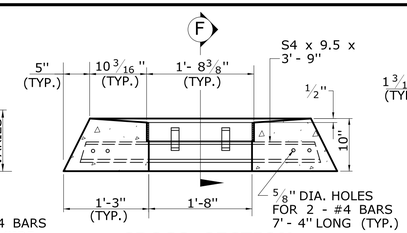

CROSS SECTION

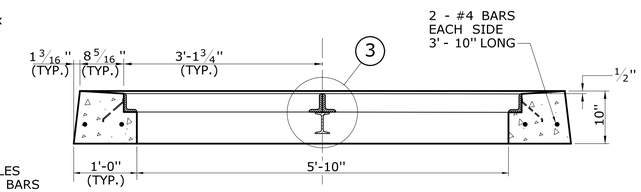

SECTION F

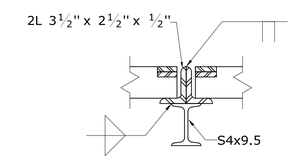

DETAIL "3"

TYPE "C-L" CATCH BASIN DOUBLE GRATE - TYPE II TOP

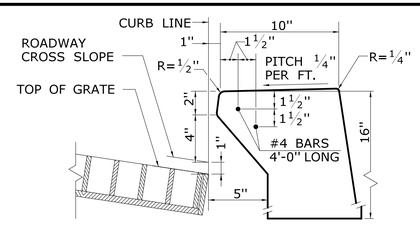

INLET WITH 6" CONCRETE OR STONE CURBING FOR TYPE "C" CB

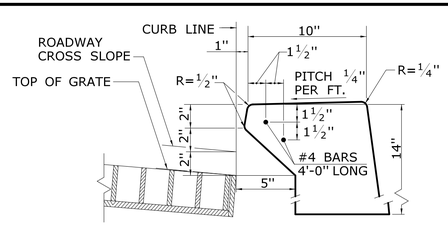

INLET WITH NO CURBING (PLAIN TYPE) FOR TYPE "C" CB

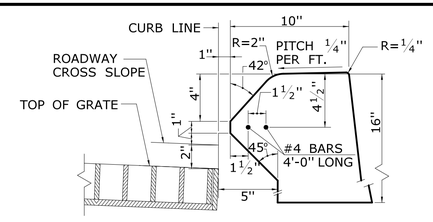

INLET WITH 6" BITUMINOUS CONCRETE LIP CURBING FOR TYPE "C" CB

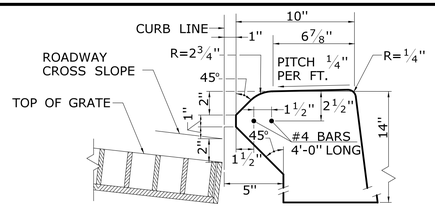

INLET WITH 4" CONCRETE PARK CURBING FOR TYPE "C" CB

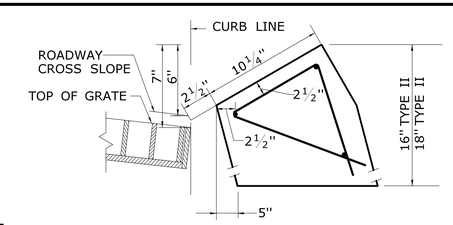

INLET WITH GRANITE SLOPE CURB FOR TYPE "C" CB

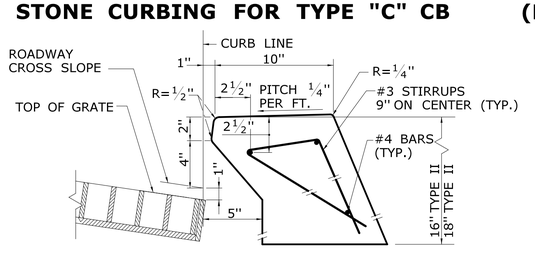

INLET WITH 6" CONCRETE OR STONE CURBING FOR TYPE "C" CB DOUBLE GRATE TYPE I & II

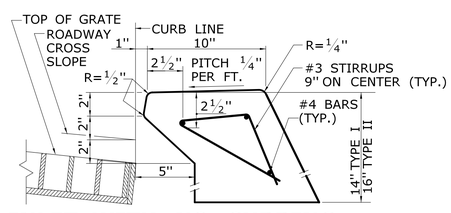

INLET WITH NO CURBING (PLAIN TYPE) FOR TYPE "C" CB DOUBLE GRATE TYPE I & II

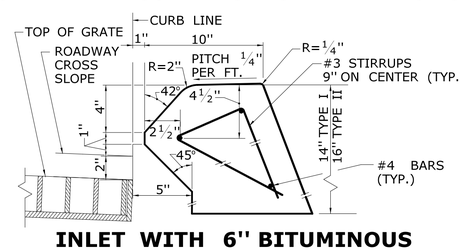

INLET WITH 6" BITUMINOUS CONCRETE LIP CURBING FOR TYPE "C" CB DOUBLE GRATE TYPE I & II

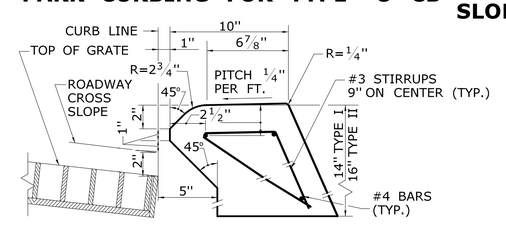

INLET WITH 4" CONCRETE PARK CURBING FOR TYPE "C" CB DOUBLE GRATE TYPE I & II

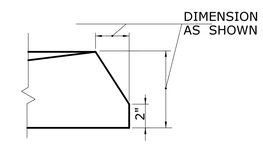

ALTERNATE CONSTRUCTION OF TYPE II TOP

REV.	DATE	REVISION DESCRIPTION	SHEET NO.

THE INFORMATION, INCLUDING ESTIMATED QUANTITIES OF WORK, SHOWN ON THESE SHEETS IS BASED ON LIMITED INVESTIGATIONS BY THE STATE AND IS IN NO WAY WARRANTED TO INDICATE THE CONDITIONS OF ACTUAL QUANTITIES OF WORK WHICH WILL BE REQUIRED.

Plotted Date: 3/19/2020

DESIGNER/DRAFTER: CM
CHECKED BY: MF

STATE OF CONNECTICUT
DEPARTMENT OF TRANSPORTATION

Filename: ...\CTDOT_HIGHWAY_GD [6-11-19].dgn

SIGNATURE/BLOCK:

STATE OF CONNECTICUT LICENSED PROFESSIONAL ENGINEER

BL Companies
BL COMPANIES, INC.
355 RESEARCH PARKWAY
MERIDEN, CT 06450

PROJECT TITLE:
RAILROAD-HIGHWAY GRADE CROSSING IMPROVEMENTS HARVEY LANE

TOWN: SUFFIELD

DRAWING TITLE:
CATCH BASIN TOPS TYPE "C" & "C-L"

PROJECT NO. 139-103
DRAWING NO. MDS-05
SHEET NO. 03.08

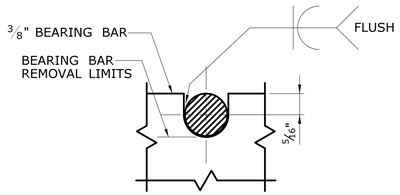

NOTE:
5/8" DIA. ROUND BAR SHALL CONTACT BEARING BAR AT BOTTOM AND BE FLUSH AT TOP.

ROUND BAR ATTACHMENT
CATCH BASIN GRATE TYPE A

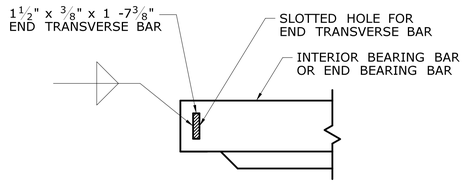

END TRANSVERSE BAR ATTACHMENT
CATCH BASIN GRATE TYPE A AND B

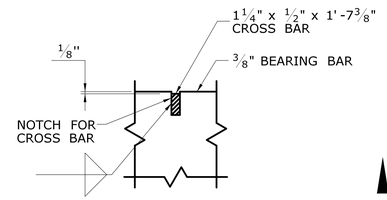

CROSS BAR ATTACHMENT
CATCH BASIN GRATE TYPE B

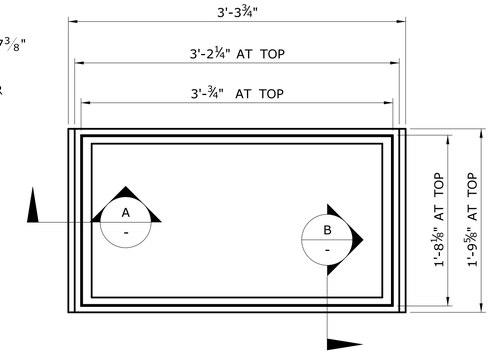

PLAN

GENERAL NOTES:

1. STEEL OR CAST IRON SHALL BE USED FOR FRAMES. STEEL SHALL BE USED FOR TYPE "A" AND "B" GRATES.
2. TYPE "A" GRATES SHALL BE USED ON ALL ROADWAYS WHERE BICYCLE TRAFFIC IS ALLOWED OR ON HEAVY DUTY LOCK DOWN TOPS AS DIRECTED BY THE ENGINEER.
3. TYPE "B" GRATES SHALL BE USED ON ALL LIMITED ACCESS HIGHWAYS, RAMPS AND WHERE BICYCLE TRAFFIC IS NOT ALLOWED OR AS DIRECTED BY THE ENGINEER.
4. DO NOT GALVANIZE CAST IRON FRAMES.
5. DIMENSIONAL TOLERANCES SHALL BE ± 1/16 INCH.
6. ALL STEEL BARS SHALL BE WELDED AT ALL INTERSECTIONS.

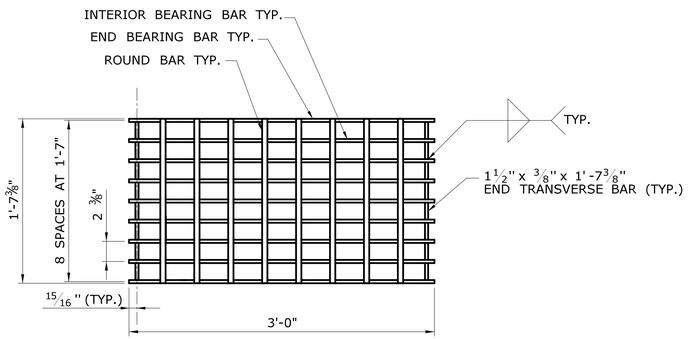

PLAN

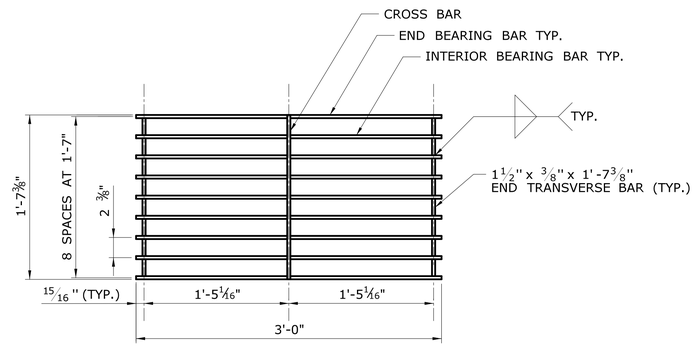

PLAN

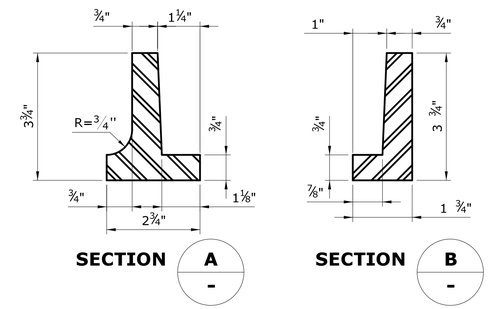

CAST IRON FRAME ALTERNATE

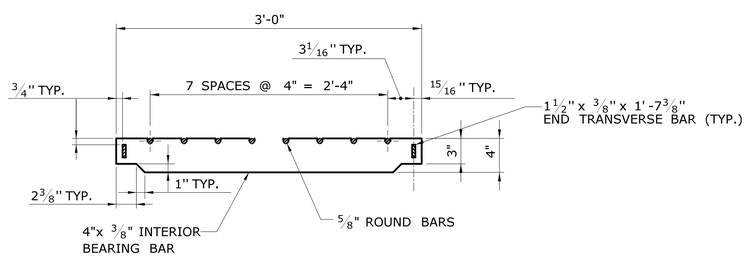

ELEVATION- INTERIOR BEARING BAR

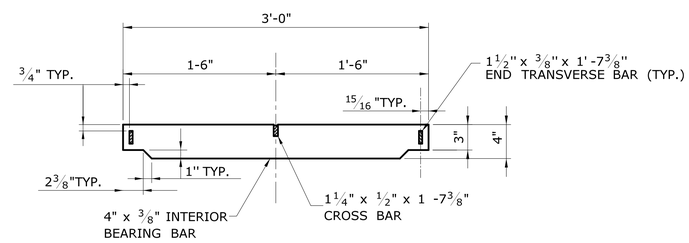

ELEVATION- INTERIOR BEARING BAR

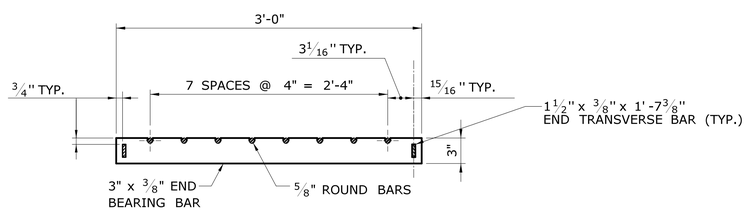

ELEVATION- END BEARING BAR
CATCH BASIN GRATE TYPE A

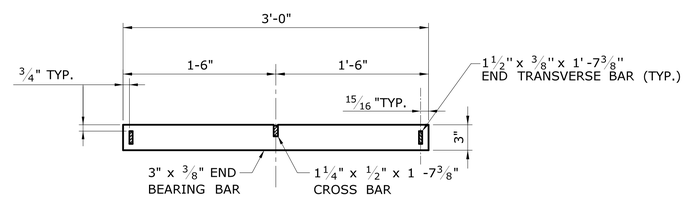

ELEVATION- END BEARING BAR
CATCH BASIN GRATE TYPE B

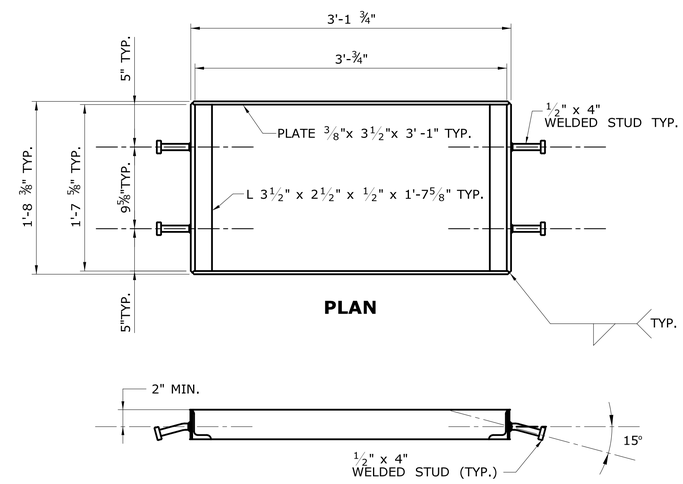

PLAN

WELDED STUD ANCHOR DETAILS
STEEL FRAME

REV.	DATE	REVISION DESCRIPTION	SHEET NO.

THE INFORMATION, INCLUDING ESTIMATED QUANTITIES OF WORK, SHOWN ON THESE SHEETS IS BASED ON LIMITED INVESTIGATIONS BY THE STATE AND IS IN NO WAY WARRANTED TO INDICATE THE CONDITIONS OF ACTUAL QUANTITIES OF WORK WHICH WILL BE REQUIRED.

Plotted Date: 3/19/2020

DESIGNER/DRAFTER: CM
CHECKED BY: MF

STATE OF CONNECTICUT
DEPARTMENT OF TRANSPORTATION

Filename: ...\CTDOT_HIGHWAY_GD [6-11-19].dgn

SIGNATURE/BLOCK:

BL Companies
BL COMPANIES, INC.
355 RESEARCH PARKWAY
MERIDEN, CT 06450

PROJECT TITLE:
RAILROAD-HIGHWAY GRADE CROSSING IMPROVEMENTS HARVEY LANE

TOWN: **SUFFIELD**

DRAWING TITLE: **CATCH BASIN FRAMES AND GRATES**

PROJECT NO. **139-103**
DRAWING NO. **MDS-06**
SHEET NO. **03.09**

GENERAL NOTES:

1. ALL DIMENSIONS ARE SUBJECT TO MANUFACTURING TOLERANCES.

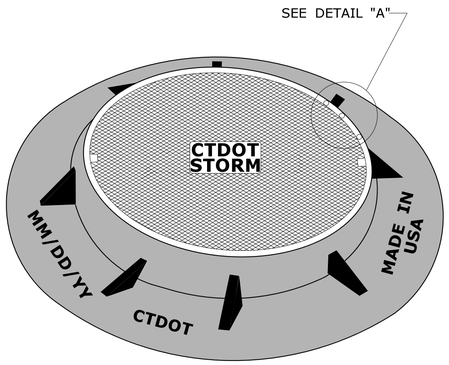

MANHOLE FRAME AND COVER

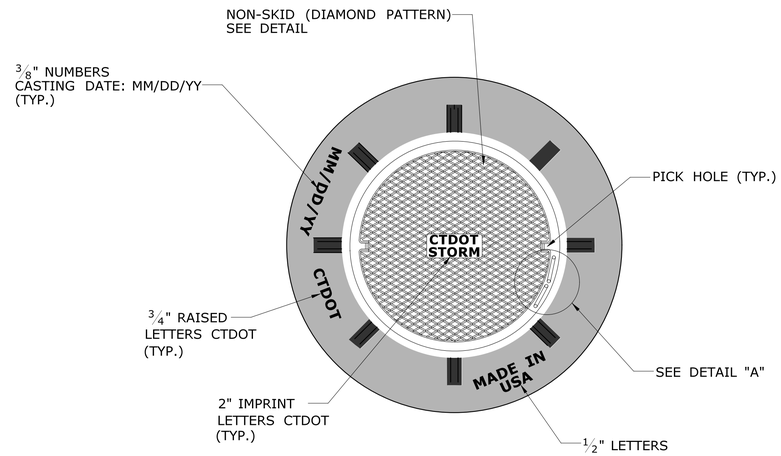

PLAN

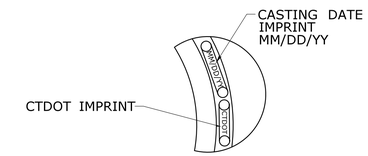

DETAIL "A"

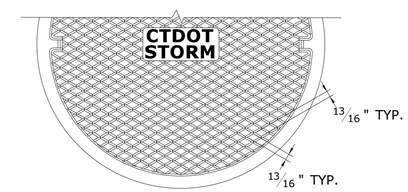

DIAMOND PATTERN PLAN

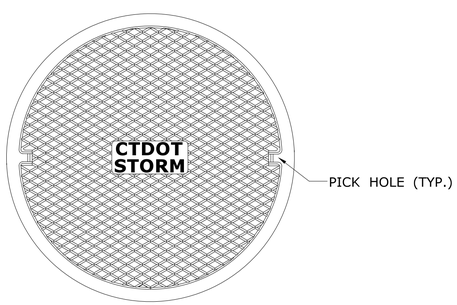

MANHOLE COVER PLAN

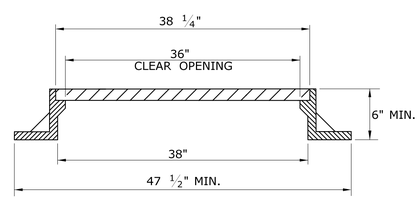

MANHOLE FRAME AND COVER

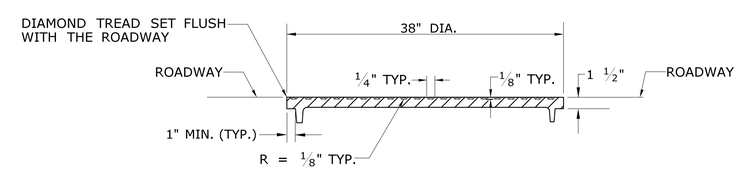

MANHOLE COVER WITH DIAMOND PATTERN

REV.	DATE	REVISION DESCRIPTION	SHEET NO.

THE INFORMATION, INCLUDING ESTIMATED QUANTITIES OF WORK, SHOWN ON THESE SHEETS IS BASED ON LIMITED INVESTIGATIONS BY THE STATE AND IS IN NO WAY WARRANTED TO INDICATE THE CONDITIONS OF ACTUAL QUANTITIES OF WORK WHICH WILL BE REQUIRED.

Plotted Date: 3/19/2020

DESIGNER/DRAFTER: CM

CHECKED BY: MF

STATE OF CONNECTICUT
DEPARTMENT OF TRANSPORTATION

Filename: ...\CTDOT_HIGHWAY.GD [6-11-19].dgn

SIGNATURE/ BLOCK:

BL Companies
BL COMPANIES, INC.
355 RESEARCH PARKWAY
MERIDEN, CT 06450

PROJECT TITLE:
RAILROAD-HIGHWAY GRADE CROSSING IMPROVEMENTS HARVEY LANE

TOWN: **SUFFIELD**

DRAWING TITLE: **MANHOLE FRAME AND COVER**

PROJECT NO. **139-103**

DRAWING NO. **MDS-07**

SHEET NO. **03.10**

GENERAL NOTES:

1. ALL DIMENSIONS ARE SUBJECT TO MANUFACTURERS TOLERANCE.
2. SEE GUIDE SHEET NO. DGS-10a, OR DGS-10b FOR MANHOLE FRAME, GRATE AND COVER DETAIL.

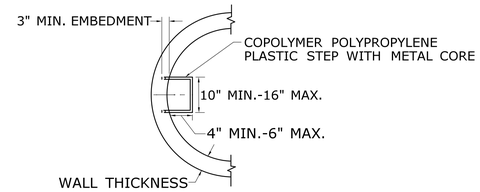

STEP DETAIL

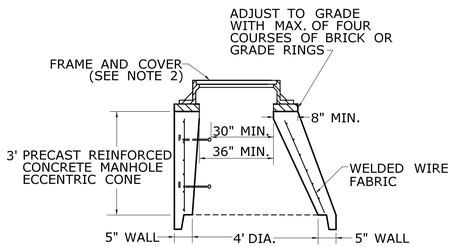

ECCENTRIC CONE SECTION

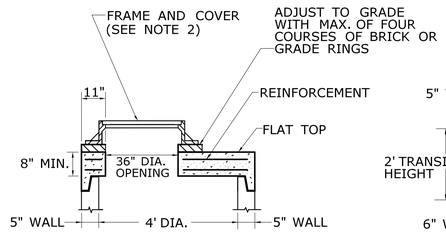

FLAT SLAB TOP FOR RISER SECTION

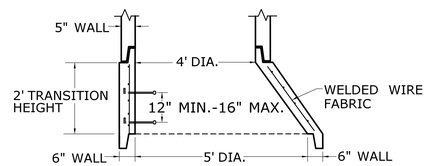

TRANSITION SECTION

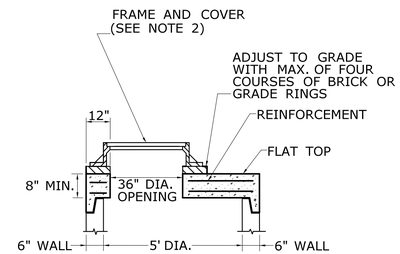

FLAT SLAB TOP FOR RISER SECTION

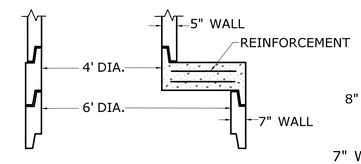

REDUCER SECTION

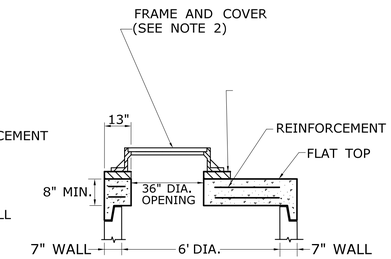

FLAT SLAB TOP FOR RISER SECTION

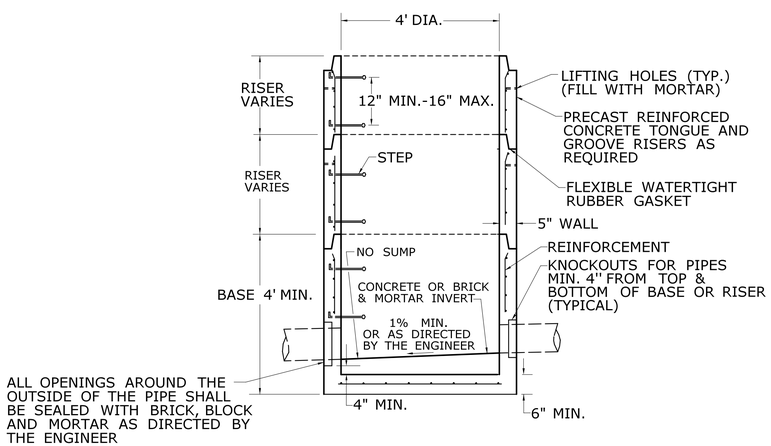

SECTION
4' DIAMETER REINFORCED PRECAST CONCRETE MANHOLE

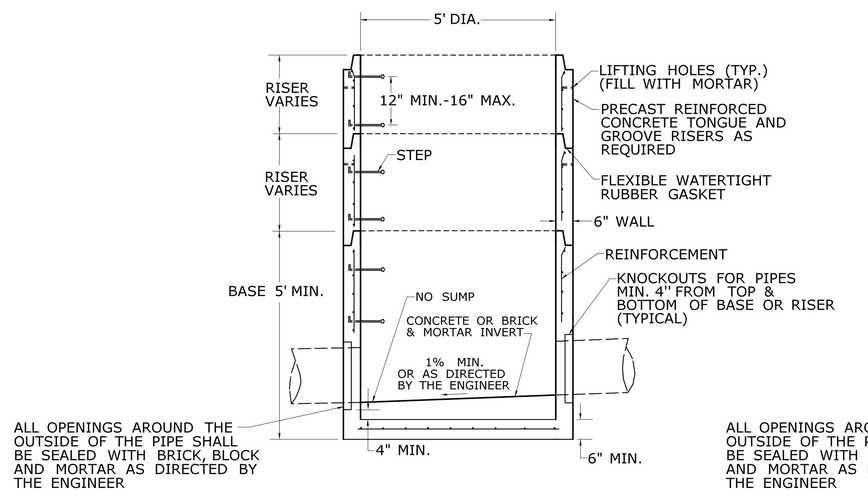

SECTION
5' DIAMETER REINFORCED PRECAST CONCRETE MANHOLE

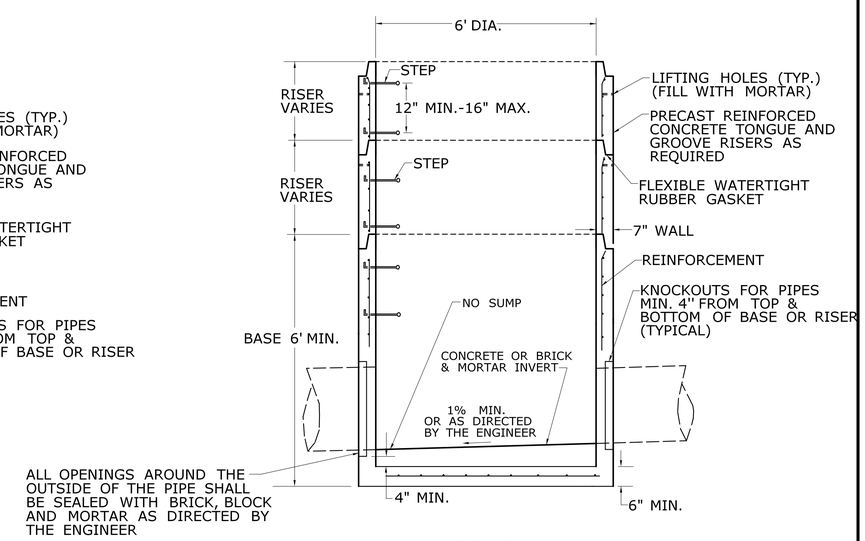

SECTION
6' DIAMETER REINFORCED PRECAST CONCRETE MANHOLE

REV.	DATE	REVISION DESCRIPTION	SHEET NO.

THE INFORMATION, INCLUDING ESTIMATED QUANTITIES OF WORK, SHOWN ON THESE SHEETS IS BASED ON LIMITED INVESTIGATIONS BY THE STATE AND IS IN NO WAY WARRANTED TO INDICATE THE CONDITIONS OF ACTUAL QUANTITIES OF WORK WHICH WILL BE REQUIRED.

Plotted Date: 3/19/2020

DESIGNER/DRAFTER: CM
CHECKED BY: MF

STATE OF CONNECTICUT
DEPARTMENT OF TRANSPORTATION

Filename: ...\CTDOT_HIGHWAY.GD [6-11-19].dgn

SIGNATURE/BLOCK:

BL Companies
BL COMPANIES, INC.
355 RESEARCH PARKWAY
MERIDEN, CT 06450

PROJECT TITLE:
RAILROAD-HIGHWAY GRADE CROSSING IMPROVEMENTS HARVEY LANE

TOWN: **SUFFIELD**

DRAWING TITLE:
REINFORCED PRECAST CONCRETE MANHOLE

PROJECT NO. **139-103**
DRAWING NO. **MDS-08**
SHEET NO. **03.11**

GENERAL NOTES:

1. SEE GUIDE SHEET NO. DGS-10a OR DGS-10b FOR MANHOLE FRAME, GRATE AND COVER DETAIL.

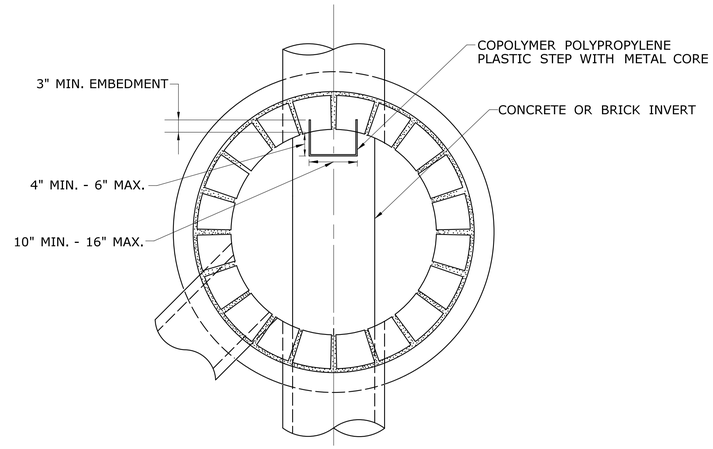

PLAN

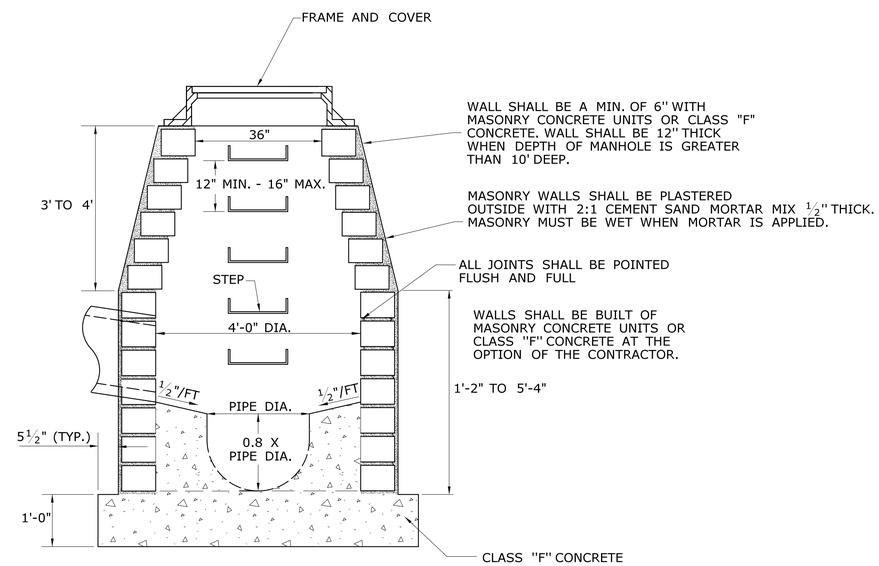

MANHOLE SECTION

REV.	DATE	REVISION DESCRIPTION	SHEET NO.

THE INFORMATION, INCLUDING ESTIMATED QUANTITIES OF WORK, SHOWN ON THESE SHEETS IS BASED ON LIMITED INVESTIGATIONS BY THE STATE AND IS IN NO WAY WARRANTED TO INDICATE THE CONDITIONS OF ACTUAL QUANTITIES OF WORK WHICH WILL BE REQUIRED.

Plotted Date: 3/19/2020

DESIGNER/DRAFTER: CM

CHECKED BY: MF

STATE OF CONNECTICUT
DEPARTMENT OF TRANSPORTATION

Filename: ...\CTDOT_HIGHWAY_GD [6-11-19].dgn

SIGNATURE/ BLOCK:

BL Companies
BL COMPANIES, INC.
355 RESEARCH PARKWAY
MERIDEN, CT 06450

PROJECT TITLE:
RAILROAD-HIGHWAY GRADE CROSSING IMPROVEMENTS HARVEY LANE

TOWN: **SUFFIELD**

DRAWING TITLE: **MANHOLE NON-PRECAST CONCRETE UNIT**

PROJECT NO. **139-103**

DRAWING NO. **MDS-09**

SHEET NO. **03.12**

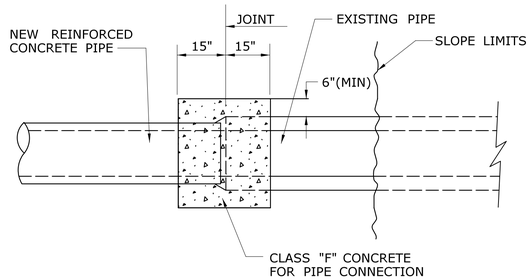

PLAN

NOTES:

1. "CONCRETE PIPE CONNECTION" IS INTENDED FOR USE WHERE A REINFORCED CONCRETE PIPE REPAIR OR MODIFICATION IS NEEDED SOMEWHERE WITHIN A PIPE RUN WHERE A BELL/SPIGOT JOINT CANNOT BE ACHIEVED.
2. MAINTAIN INTERIOR ALIGNMENT OF PIPE AT JOINTS UNTIL CONCRETE IS PROPERLY CURED.
3. BACKFILL OF PIPE REPAIR WITH SUITABLE MATERIAL MAY NOT TAKE PLACE UNTIL CONCRETE IS PROPERLY CURED.
4. CONTRACTOR SHALL MAINTAIN LINE AND GRADE OF PIPE REPAIR OR MODIFICATION BY METHODS APPROVED BY THE ENGINEER.
5. HOLES OR GAPS AT JOINT LARGER THAN 3/8" SHALL BE FILLED OR WRAPPED TO PREVENT CONCRETE FROM ENTERING PIPE.

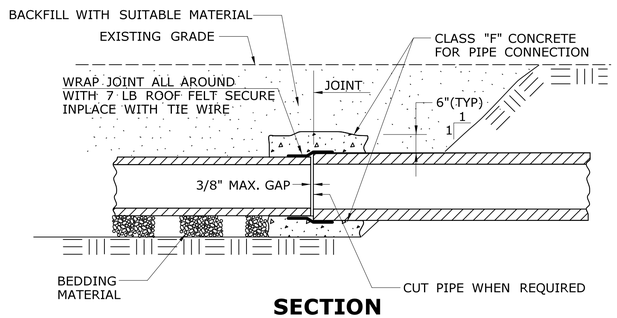

SECTION
CONCRETE PIPE CONNECTION

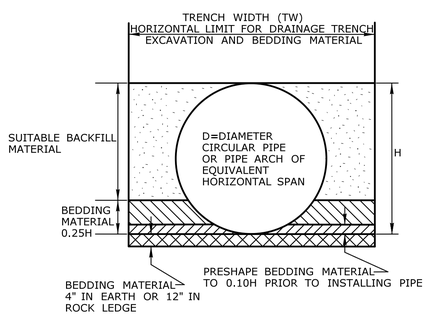

PIPE TRENCH
FOR PIPES LESS THAN 48"

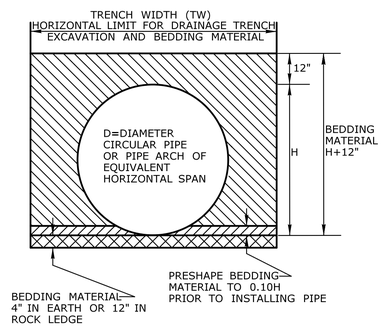

PIPE TRENCH
FOR PIPES GREATER THAN OR EQUAL TO 48"

TRENCH WIDTH (TW) CHART

PIPE, PIPE-ARCH, OR DRAINAGE STRUCTURE	TRENCH WIDTH
PIPE OR PIPE-ARCH WITH NOMINAL INSIDE HORIZONTAL SPAN LESS THAN 30"	2' GREATER THAN NOMINAL INSIDE HORIZONTAL SPAN
PIPE OR PIPE-ARCH WITH NOMINAL INSIDE HORIZONTAL SPAN GREATER THAN OR EQUAL TO 30"	3' GREATER THAN NOMINAL INSIDE HORIZONTAL SPAN
PIPE OR PIPE-ARCH FABRICATED FROM STRUCTURAL PLATES	4' GREATER THAN NOMINAL INSIDE HORIZONTAL SPAN
DRAINAGE STRUCTURES	2' BEYOND ALL EXTERIOR OR FOUNDATION WALLS

GENERAL NOTES:

1. ROCK REMOVED BEYOND THE MAXIMUM LIMIT SHOWN SHALL BE REPLACED WITH CEMENT RUBBLE MASONRY AND GRANULAR FILL.
2. FILL, AS REQUIRED TO CLOSE THE OPENING AS SHOWN ON THE PLANS, WILL BE AT THE CONTRACTORS EXPENSE. HOWEVER, THE PAY LIMIT LINES MAY BE MODIFIED TO COINCIDE WITH NATURAL FAULTS OR FISSURES OF ROCK AS THE ENGINEER MAY DETERMINE.
3. COATED CORRUGATED METAL PPE (C.C.M.P.).
4. D = PIPE DIAMETER.

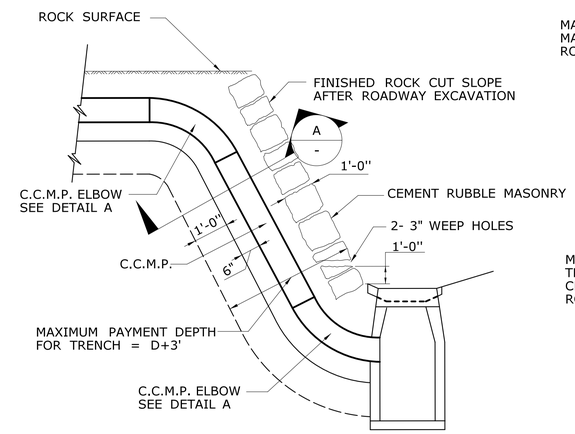

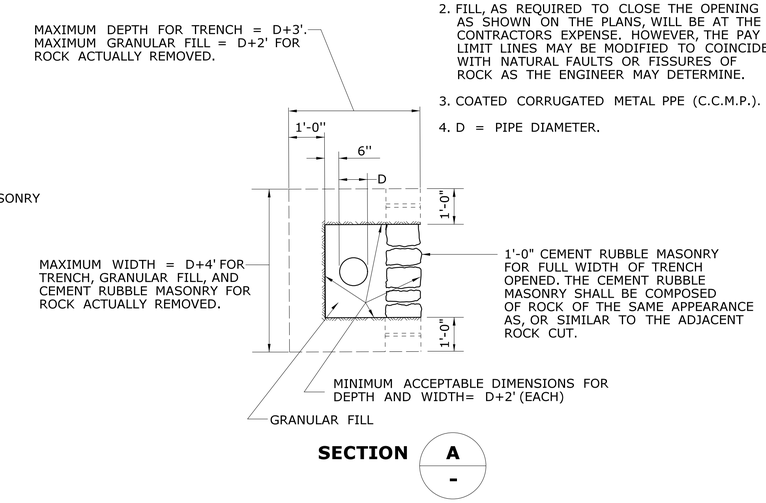

SECTION A / -

TYPICAL INSTALLATION OF C.C.M.P. IN ROCK SLOPE

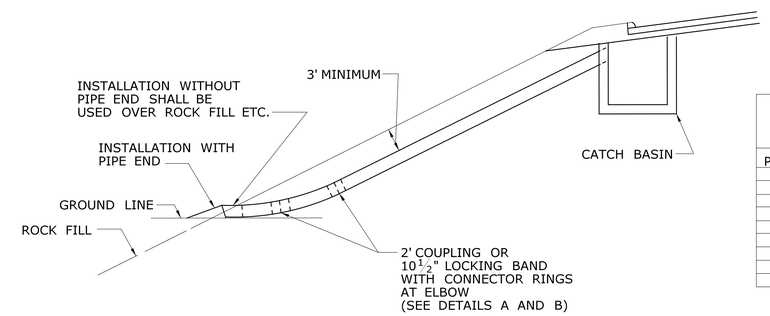

TYPICAL INSTALLATION OF C.C.M.P ELBOW IN FILL SLOPE

TABLE C
CONNECTOR RINGS

PIPE DIAMETER	LENGTH OF RING
12"	52"
15"	61"
18"	71"
21"	80"
24"	90"
30"	108"
36"	128"
42"	147"
48"	166"

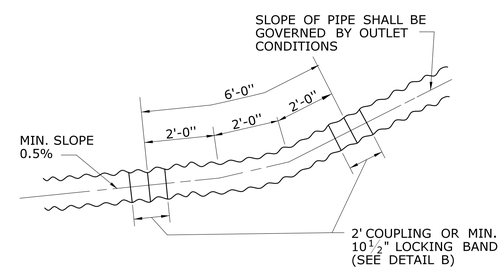

DETAIL A
C.C.M.P. ELBOW AND COUPLING

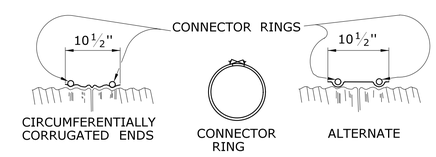

RODS: $\frac{7}{16}$" DIAMETER ELECTRO-GALVANIZED WITH 6" LENGTH OF ½" ROLLED THREADS EACH END, FURNISHED CURVED, TO FIT PIPE. SEE TABLE C

LUGS: DOUBLE TAKE UP, CAST IRON, ELECTRO-GALVANIZED.

NOTE: THE COUPLER FASTENING DEVICE SHALL NOT INTERFERE WITH INSTALLATION OF CONNECTOR RINGS.

DETAIL B
ELBOW DIMENSIONS

REV.	DATE	REVISION DESCRIPTION	SHEET NO.

THE INFORMATION, INCLUDING ESTIMATED QUANTITIES OF WORK, SHOWN ON THESE SHEETS IS BASED ON LIMITED INVESTIGATIONS BY THE STATE AND IS IN NO WAY WARRANTED TO INDICATE THE CONDITIONS OF ACTUAL QUANTITIES OF WORK WHICH WILL BE REQUIRED.

Plotted Date: 3/19/2020

DESIGNER/DRAFTER: -

CHECKED BY: -

STATE OF CONNECTICUT
DEPARTMENT OF TRANSPORTATION

Filename: ...\CTDOT_HIGHWAY_GD [6-11-19].dgn

SIGNATURE/BLOCK:

STATE OF CONNECTICUT LICENSED PROFESSIONAL ENGINEER

BL Companies
BL COMPANIES, INC.
355 RESEARCH PARKWAY
MERIDEN, CT 06450

PROJECT TITLE:
RAILROAD-HIGHWAY GRADE CROSSING IMPROVEMENTS HARVEY LANE

TOWN: SUFFIELD

DRAWING TITLE: C.C.M. PIPE INSTALLATION & PIPE TRENCH DETAIL

PROJECT NO. 139-103

DRAWING NO. MDS-10

SHEET NO. 03.13

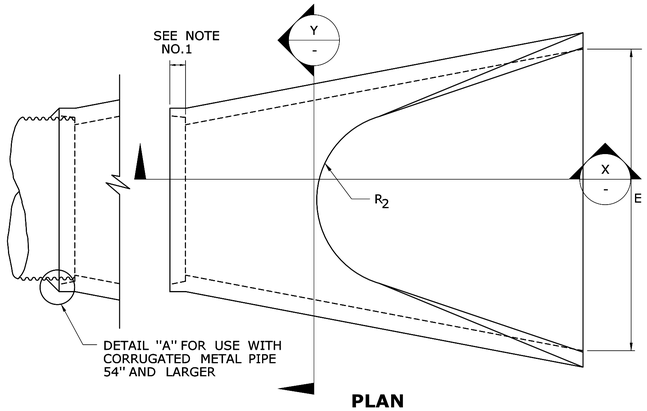

PLAN

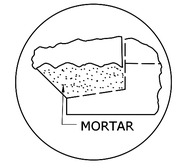

DETAIL "A"

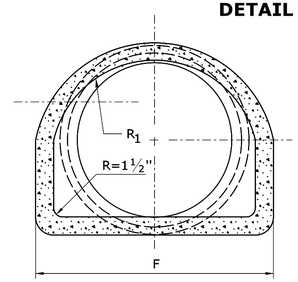

SECTION Y / -

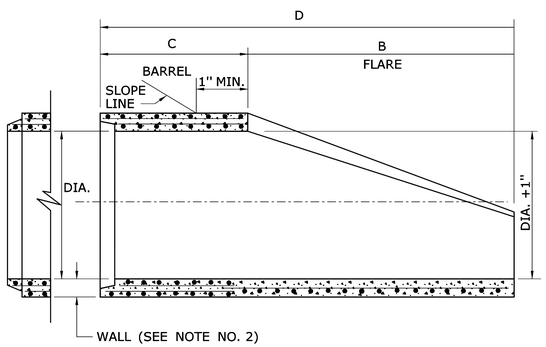

SECTION X / -

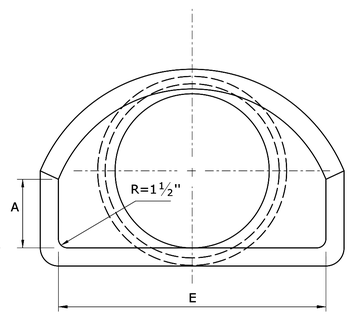

END VIEW

REINFORCED CONCRETE PIPE END

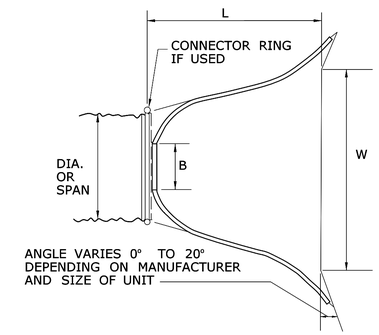

PLAN

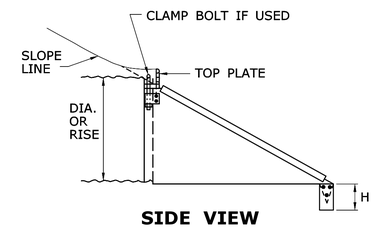

SIDE VIEW

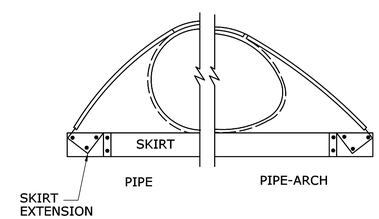

END VIEW

METAL PIPE END

GENERAL NOTES:

1. JOINTS SHALL BE TONGUE AND GROOVE OR BELL AND SPIGOT AS REQUIRED TO CONFORM TO PIPE INSTALLED.
2. WALL THICKNESS SHALL CONFORM TO PIPE THICKNESS.

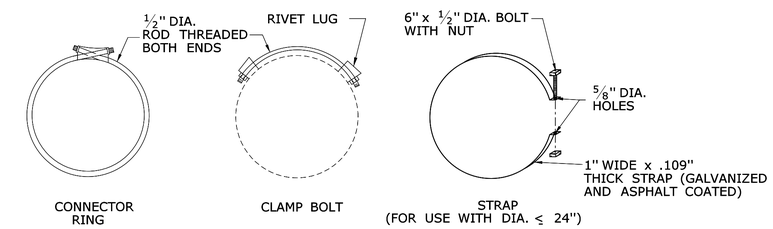

ATTACHMENT SYSTEMS

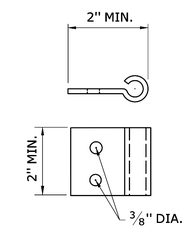

RIVET LUG

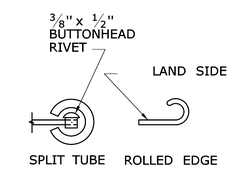

EDGE REINFORCEMENT

DIMENSIONS FOR REINFORCED CONCRETE PIPE END									FLARE REINFORCEMENT ONE LAYER ONLY IN CENTER OF WALL	
DIA.	A	B	C	D	E	F	R_1	R_2	MIN. AREA OF LONGITUDINAL STEEL SQ. IN. PER FT.	MIN. AREA OF TRANSVERSE STEEL SQ. IN. PER FT.
12"	4"	2'-0"	4'-0⅜"	6'-0⅜"	2'-0"	1'-7 15/16"	10¼"	9"	0.048	0.048
15"	6"	2'-3"	3'-10"	6'-1"	2'-6"	2'-0 5/16"	1'-0½"	11"	0.054	0.054
18"	9"	2'-3"	3'-10"	6'-1"	3'-0"	2'-5"	1'-3½"	1'-0"	0.060	0.060
21"	9"	2'-11"	3'-2"	6'-1"	3'-6"	2'-7½"	1'-4"	1'-1"	0.066	0.066
24"	9½"	3'-7½"	2'-6"	6'-1½"	4'-0"	2'-9 3/16"	1'-4 13/16"	1'-2"	0.072	0.072
30"	1'-0"	4'-6"	1'-7¾"	6'-1¾"	5'-0"	3'-1"	1'-6½"	1'-3"	0.084	0.084
36"	1'-3"	5'-3"	2'-10¾"	8'-1¾"	6'-0"	3'-11 13/16"	2'-0 5/16"	1'-8"	0.096	0.096
42"	1'-9"	5'-3"	2'-11"	8'-2"	6'-6"	4'-5⅞"	2'-3½"	1'-10"	0.108	0.108
48"	2'-0"	6'-0"	2'-2"	8'-2"	7'-0"	4'-8½"	2'-4½"	1'-10"	0.120	0.120
54"	2'-3"	5'-5"	2'-11"	8'-4"	7'-6"	5'-5½"	2'-9⅛"	2'-0"	0.132	0.132
60"	2'-9"	5'-0"	3'-3"	8'-3"	8'-0"	6'-0½"	3'-0 11/16"	2'-0"	0.144	0.144

PIPE DIA.	DIMENSIONS FOR METAL PIPE END				THICKNESS INS.
	B (MAX.)	H±1"	L±1½"	W±2"	
12"	6"	6"	21"	24"	.064
15"	8"	6"	26"	30"	.064
18"	10"	6"	31"	36"	.064
21"	12"	6"	36"	42"	.064
24"	13"	6"	41"	48"	.064
30"	16"	8"	51"	60"	.079
36"	19"	9"	60"	72"	.079
42"	22"	11"	69"	84"	.109
48"	27"	12"	78"	90"	.109
54"	30"	12"	84"	102"	.109
60"	33"	12"	87"	114"	.109
66"	36"	12"	87"	120"	.109
72"	39"	12"	87"	126"	.109
78"	42"	12"	87"	132"	.109
84"	45"	12"	87"	138"	.109

PIPE ARCH SIZE		DIMENSIONS FOR METAL PIPE END				
SPAN	RISE	B (MAX.)	H±1"	L±1½"	W±2"	THICKNESS INS.
17"	13"	9"	6"	19"	30"	.064
21"	15"	10"	6"	23"	36"	.064
24"	18"	12"	6"	28"	42"	.064
28"	20"	14"	6"	32"	48"	.064
35"	24"	16"	6"	39"	60"	.079
42"	29"	18"	8"	46"	75"	.079
49"	33"	21"	9"	53"	85"	.109
57"	38"	26"	12"	63"	90"	.109
64"	43"	30"	12"	70"	102"	.109
71"	47"	33"	12"	77"	114"	.109

REV.	DATE	REVISION DESCRIPTION	SHEET NO.

THE INFORMATION, INCLUDING ESTIMATED QUANTITIES OF WORK, SHOWN ON THESE SHEETS IS BASED ON LIMITED INVESTIGATIONS BY THE STATE AND IS IN NO WAY WARRANTED TO INDICATE THE CONDITIONS OF ACTUAL QUANTITIES OF WORK WHICH WILL BE REQUIRED.

Plotted Date: 3/19/2020

DESIGNER/DRAFTER: CM
CHECKED BY: MF

STATE OF CONNECTICUT
DEPARTMENT OF TRANSPORTATION

Filename: ...\CTDOT_HIGHWAY_GD [6-11-19].dgn

SIGNATURE/BLOCK:

STATE OF CONNECTICUT PROFESSIONAL ENGINEER

BL Companies
BL COMPANIES, INC.
355 RESEARCH PARKWAY
MERIDEN, CT 06450

PROJECT TITLE:
RAILROAD-HIGHWAY GRADE CROSSING IMPROVEMENTS HARVEY LANE

TOWN: **SUFFIELD**

DRAWING TITLE: **PIPE ENDS**

PROJECT NO. **139-103**
DRAWING NO. **MDS-11**
SHEET NO. **03.14**

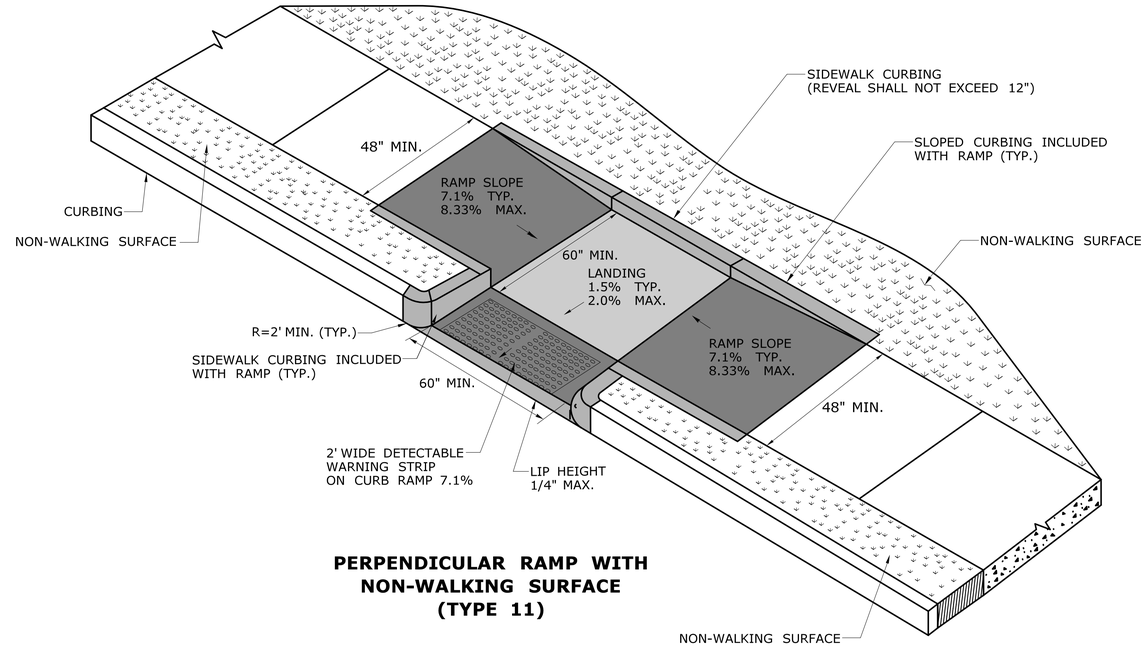

PERPENDICULAR RAMP WITH NON-WALKING SURFACE (TYPE 11)

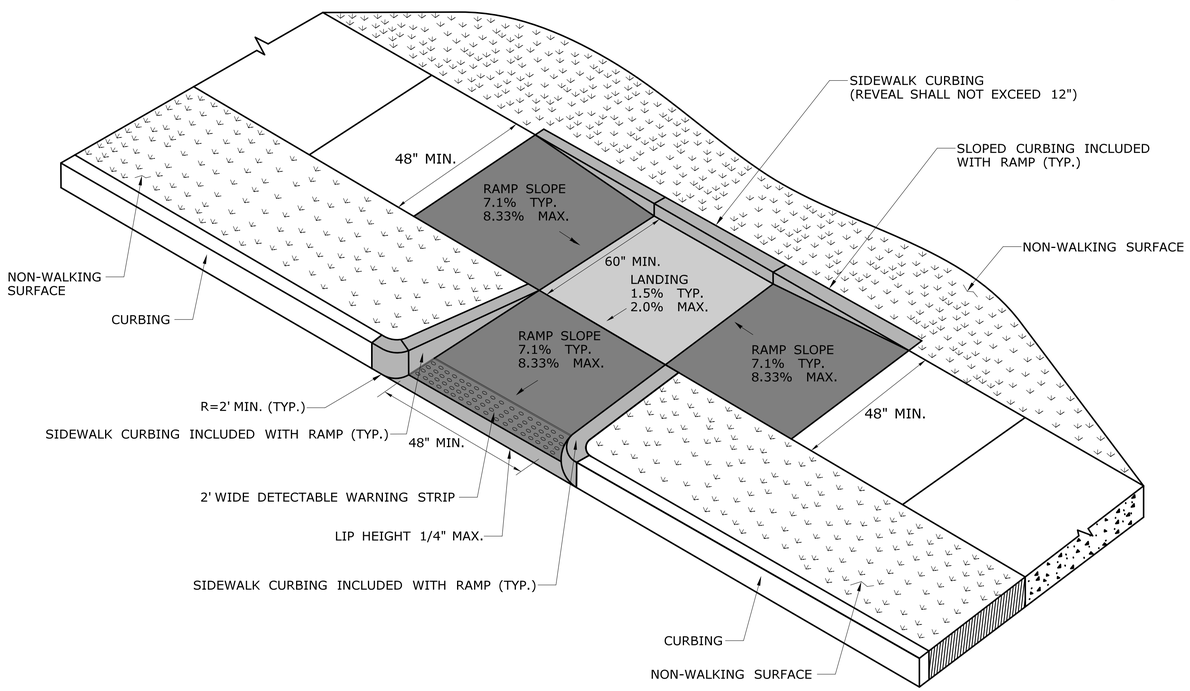

PERPENDICULAR RAMP WITH SIDEWALK CURB AND NON-WALKING SURFACE (TYPE 12)

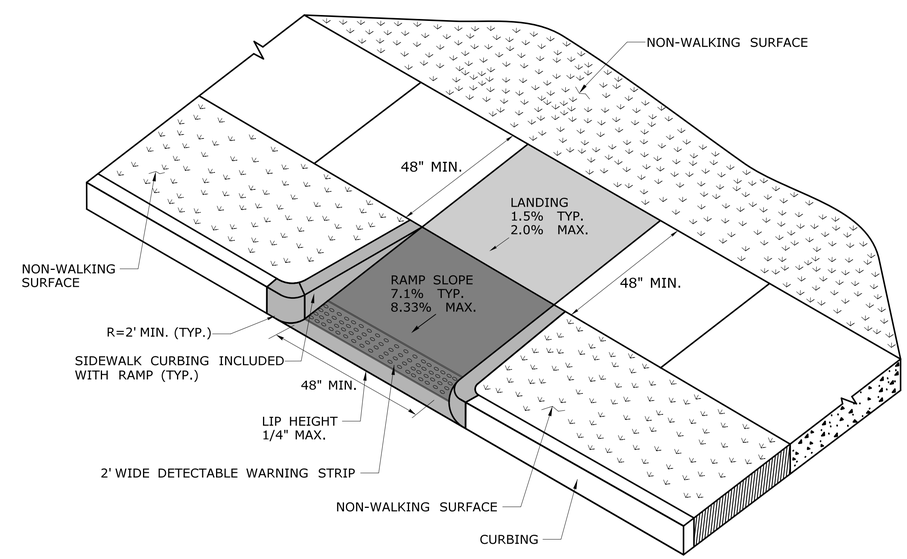

PERPENDICULAR RAMP WITH NON-WALKING SURFACE (TYPE 13)

REV.	DATE	REVISION DESCRIPTION	SHEET NO.

THE INFORMATION, INCLUDING ESTIMATED QUANTITIES OF WORK, SHOWN ON THESE SHEETS IS BASED ON LIMITED INVESTIGATIONS BY THE STATE AND IS IN NO WAY WARRANTED TO INDICATE THE CONDITIONS OF ACTUAL QUANTITIES OF WORK WHICH WILL BE REQUIRED.

Plotted Date: 3/19/2020

DESIGNER/DRAFTER: CM

CHECKED BY: MF

STATE OF CONNECTICUT
DEPARTMENT OF TRANSPORTATION

Filename: ...\CTDOT_HIGHWAY_GD [6-11-19].dgn

SIGNATURE/ BLOCK:

BL Companies
BL COMPANIES, INC.
355 RESEARCH PARKWAY
MERIDEN, CT 06450

PROJECT TITLE:
RAILROAD-HIGHWAY GRADE CROSSING IMPROVEMENTS HARVEY LANE

TOWN: **SUFFIELD**

DRAWING TITLE: **CONCRETE SIDEWALK RAMPS**

PROJECT NO. **139-103**

DRAWING NO. **MDS-12**

SHEET NO. **03.15**

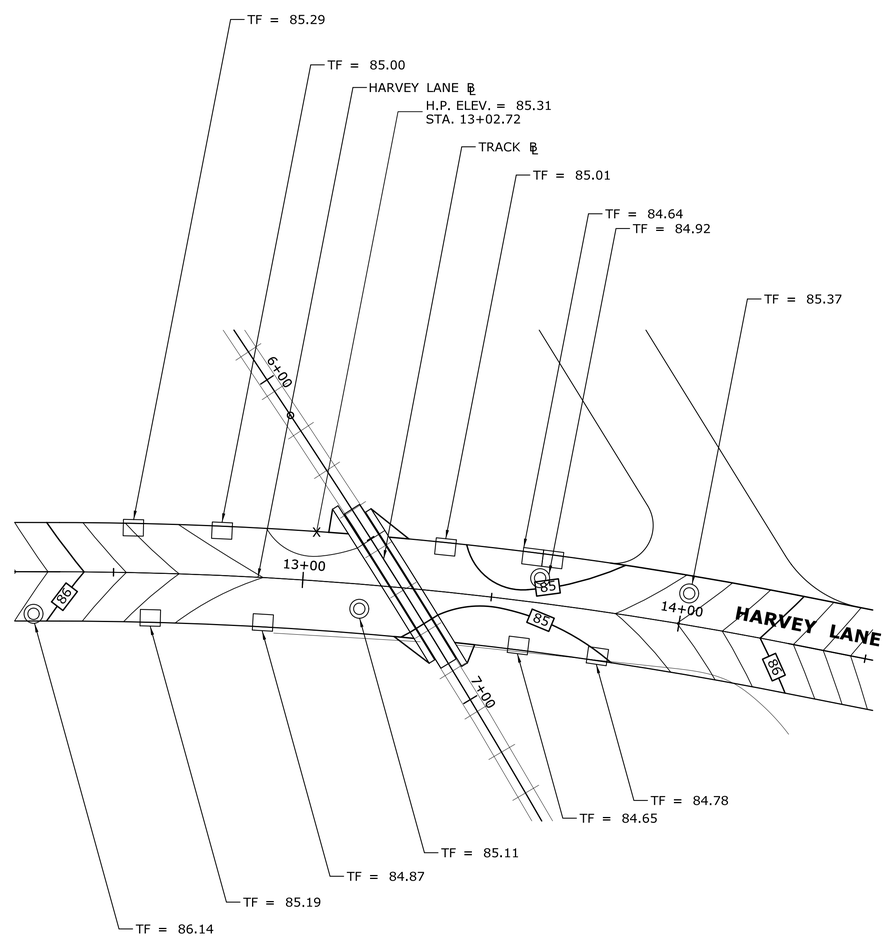

LEGEND

86 — PROPOSED MAJOR CONTOUR

PROPOSED MINOR CONTOUR

NOTES

1. CONTOUR INTERVAL = 0.25'

REV.	DATE	REVISION DESCRIPTION	SHEET NO.

THE INFORMATION, INCLUDING ESTIMATED QUANTITIES OF WORK, SHOWN ON THESE SHEETS IS BASED ON LIMITED INVESTIGATIONS BY THE STATE AND IS IN NO WAY WARRANTED TO INDICATE THE CONDITIONS OF ACTUAL QUANTITIES OF WORK WHICH WILL BE REQUIRED.

Plotted Date: 3/19/2020

DESIGNER/DRAFTER: **JE**

CHECKED BY: **SB**

SCALE IN FEET 0 20 40

SCALE 1"=20'

STATE OF CONNECTICUT
DEPARTMENT OF TRANSPORTATION

Filename: ...\HW_MSH_139-103_IGP-01.dgn

SIGNATURE/ BLOCK:

STATE OF CONNECTICUT PROFESSIONAL ENGINEER

BL Companies
BL COMPANIES, INC.
355 RESEARCH PARKWAY
MERIDEN, CT 06450

PROJECT TITLE:

RAILROAD-HIGHWAY GRADE CROSSING IMPROVEMENTS HARVEY LANE

TOWN: **SUFFIELD**

DRAWING TITLE: **INTERSECTION GRADING PLAN**

PROJECT NO. **139-103**

DRAWING NO. **IGP-01**

SHEET NO. **03.16**

SCHEDULE OF RIGHTS & EASEMENTS

- (A) TEMPORARY CONSTRUCTION EASEMENT REQUIRED
- (B) RIGHT TO CONSTRUCT DRIVEWAY REQUIRED
- (C) RIGHT TO GRADE REQUIRED
- (D) DEFINED EASEMENT FOR HIGHWAY PURPOSES REQUIRED

NOTES:

1. SEE DRAWING NO. DRN-01 FOR PROPOSED DRAINAGE.
2. SEE DRAWING NO. SPM-01 FOR RAILROAD DEVICES.
3. THE CONTRACTOR SHALL COORDINATE WITH THE UTILITY POLE OWNER AT LEAST TWO WEEKS IN ADVANCE OF THE WORK THAT REQUIRES TEMPORARY SUPPORT.
4. THE EXACT LOCATION TO TIE INTO THE EXISTING CHAIN LINK FENCE SHALL BE DIRECTED BY THE ENGINEER.

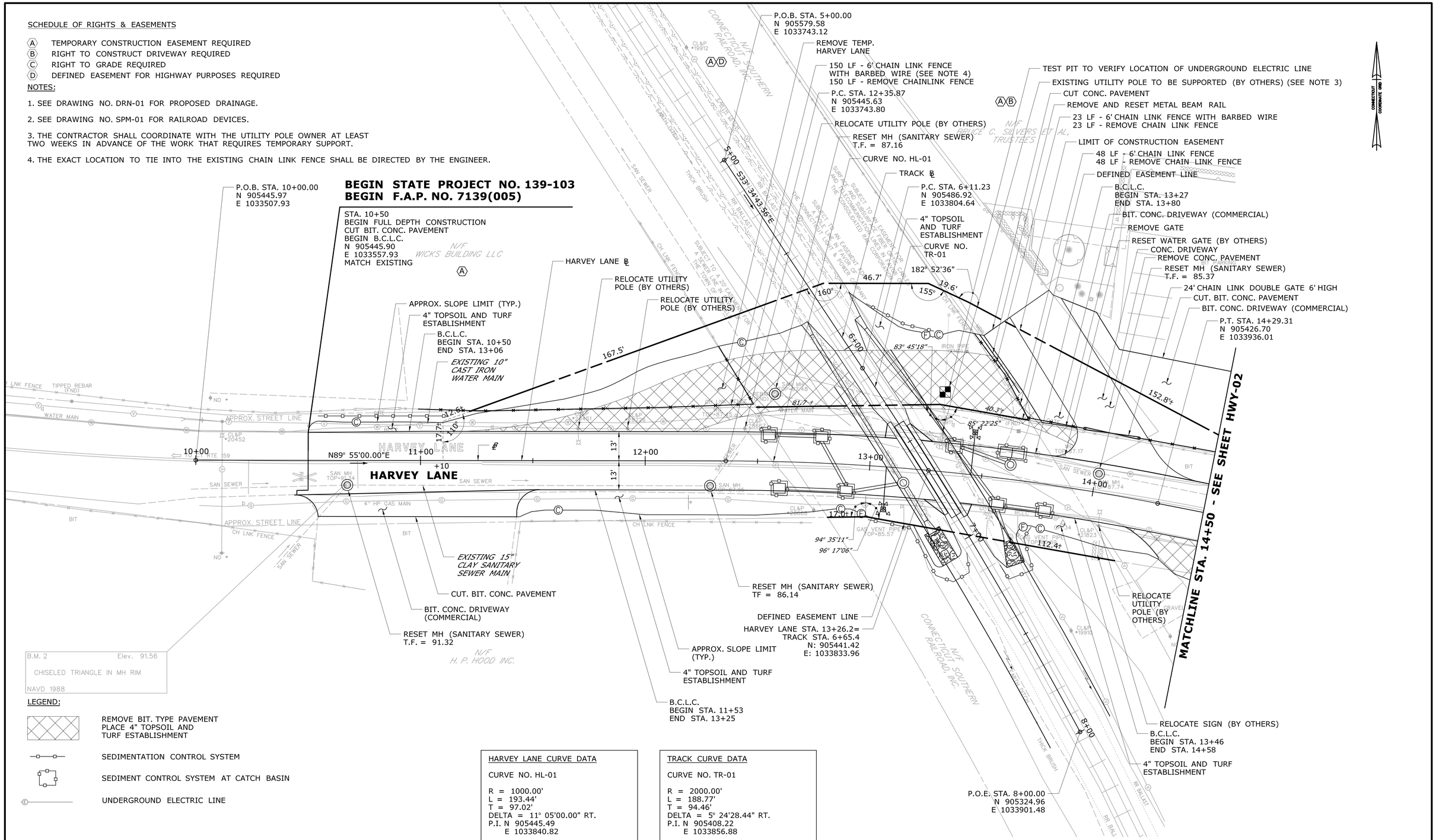

LEGEND:

- REMOVE BIT. TYPE PAVEMENT PLACE 4" TOPSOIL AND TURF ESTABLISHMENT
- SEDIMENTATION CONTROL SYSTEM
- SEDIMENT CONTROL SYSTEM AT CATCH BASIN
- UNDERGROUND ELECTRIC LINE

HARVEY LANE CURVE DATA
CURVE NO. HL-01
R = 1000.00'
L = 193.44'
T = 97.02'
DELTA = 11° 05'00.00" RT.
P.I. N 905445.49
E 1033840.82

TRACK CURVE DATA
CURVE NO. TR-01
R = 2000.00'
L = 188.77'
T = 94.46'
DELTA = 5° 24'28.44" RT.
P.I. N 905408.22
E 1033856.88

REV.	DATE	REVISION DESCRIPTION	SHEET NO.

THE INFORMATION, INCLUDING ESTIMATED QUANTITIES OF WORK, SHOWN ON THESE SHEETS IS BASED ON LIMITED INVESTIGATIONS BY THE STATE AND IS IN NO WAY WARRANTED TO INDICATE THE CONDITIONS OF ACTUAL QUANTITIES OF WORK WHICH WILL BE REQUIRED.

Plotted Date: 3/19/2020

DESIGNER/DRAFTER: JE
CHECKED BY: SB
SCALE IN FEET 0 20 40
SCALE 1"=20'

STATE OF CONNECTICUT
DEPARTMENT OF TRANSPORTATION

Filename: ...\HW_MSH_139-103_HWY_01.dgn

SIGNATURE/BLOCK:
BL Companies
BL COMPANIES, INC.
355 RESEARCH PARKWAY
MERIDEN, CT 06450

PROJECT TITLE:
RAILROAD-HIGHWAY GRADE CROSSING IMPROVEMENTS
HARVEY LANE

TOWN: SUFFIELD

DRAWING TITLE: ROADWAY PLAN

PROJECT NO. 139-103
DRAWING NO. HWY-01
SHEET NO. 03.17

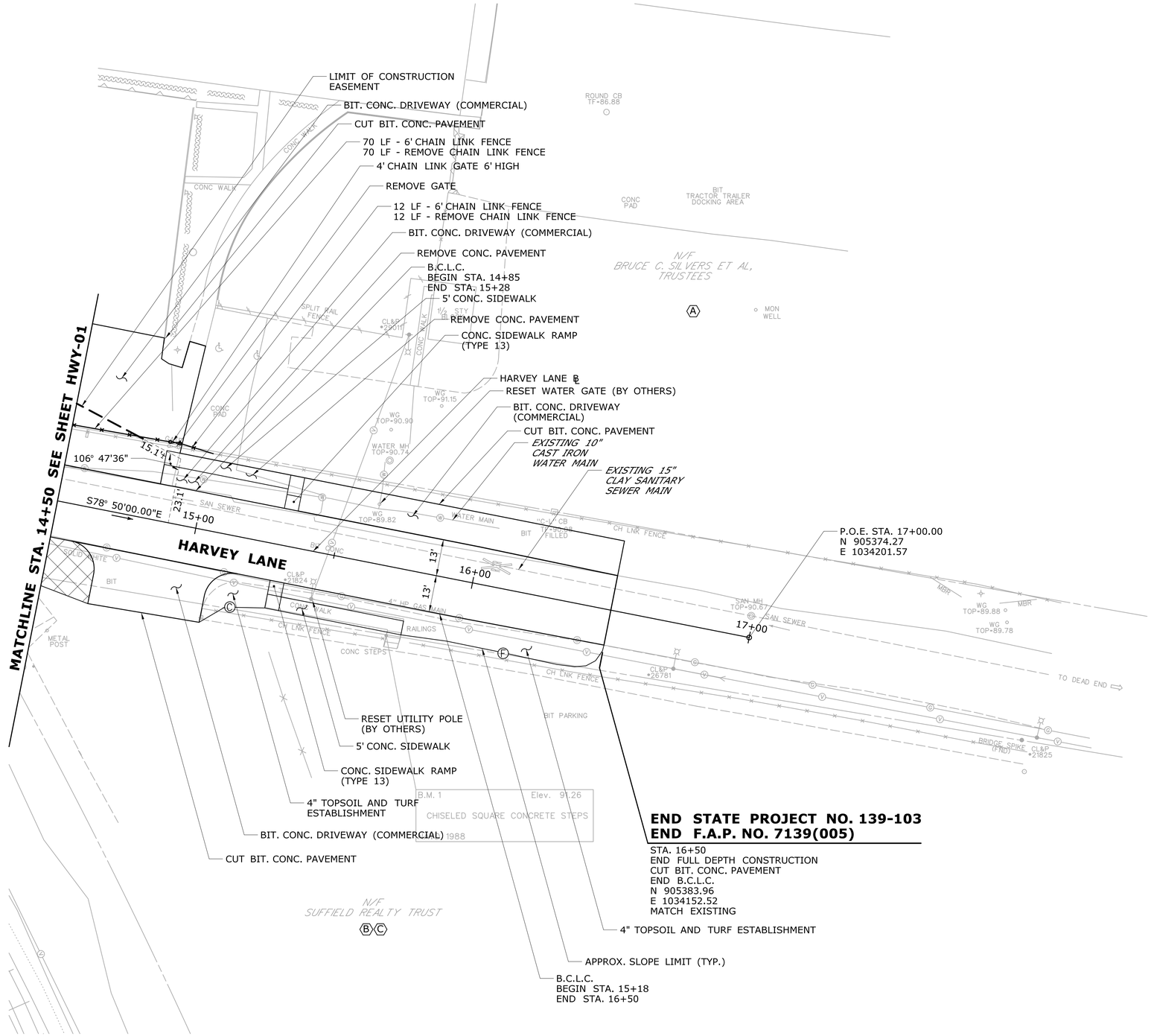

SCHEDULE OF RIGHTS & EASEMENTS

- (A) TEMPORARY CONSTRUCTION EASEMENT REQUIRED
- (B) RIGHT TO CONSTRUCT DRIVEWAY REQUIRED
- (C) RIGHT TO GRADE REQUIRED
- (D) DEFINED EASEMENT FOR HIGHWAY PURPOSES REQUIRED

LEGEND:

REMOVE BIT. TYPE PAVEMENT
PLACE 4" TOPSOIL AND
TURF ESTABLISHMENT

REV.	DATE	REVISION DESCRIPTION	SHEET NO.

THE INFORMATION, INCLUDING ESTIMATED QUANTITIES OF WORK, SHOWN ON THESE SHEETS IS BASED ON LIMITED INVESTIGATIONS BY THE STATE AND IS IN NO WAY WARRANTED TO INDICATE THE CONDITIONS OF ACTUAL QUANTITIES OF WORK WHICH WILL BE REQUIRED.

Plotted Date: 3/19/2020

DESIGNER/DRAFTER: JE
CHECKED BY: SB
SCALE IN FEET 0 20 40
SCALE 1"=20'

STATE OF CONNECTICUT
DEPARTMENT OF TRANSPORTATION

Filename: ...\HW_MSH_139-103_HWY_02.dgn

SIGNATURE/BLOCK:

STATE OF CONNECTICUT LICENSED PROFESSIONAL ENGINEER

BL Companies
BL COMPANIES, INC.
355 RESEARCH PARKWAY
MERIDEN, CT 06450

PROJECT TITLE:
RAILROAD-HIGHWAY GRADE CROSSING IMPROVEMENTS
HARVEY LANE

TOWN: SUFFIELD

DRAWING TITLE: ROADWAY PLAN

PROJECT NO. 139-103
DRAWING NO. HWY-02
SHEET NO. 03.18

UTILITY TEST PIT DATA							
WATER (CONNECTICUT WATER)							
TEST PIT #	STATION	OFFSET	NORTHING	EASTING	DEPTH TO UTILITY (FT)	UTILITY DESCRIPTION	RELOCATION ANTICIPATED
W-1	12+25	18.6 LT	905429.02	1033735.04	5.5	10" CAST IRON	NO
W-2	14+25	10.9 LT	905437.71	1033936.20	5.3	10" CAST IRON	NO
GAS (EVERSOURCE)							
TEST PIT #	STATION	OFFSET	NORTHING	EASTING	DEPTH TO UTILITY (FT)	UTILITY DESCRIPTION	RELOCATION ANTICIPATED
G-1	12+21	16.6 RT	905429.02	1033729.08	3.2	4" STEEL	NO
G-2	13+22	16.2 RT	905425.53	1033828.74	8.0 MIN.	4" STEEL	NO
G-3	13+60	15.8 RT	905422.09	1033865.59	8.0 MIN.	4" STEEL	NO
G-4	14+61	12.7 RT	905408.09	1033964.60	3.0	4" STEEL	YES

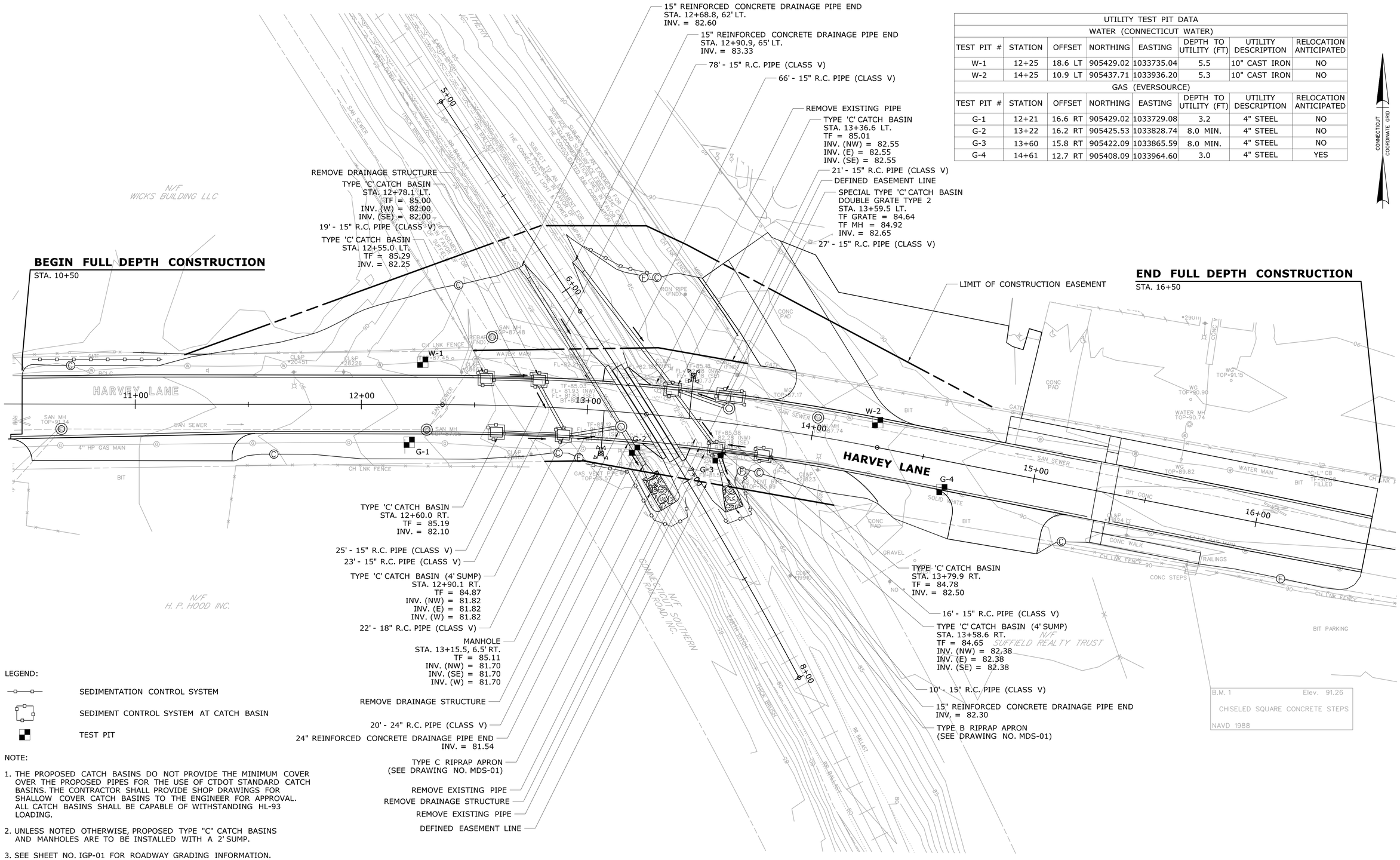

LEGEND:

- SEDIMENTATION CONTROL SYSTEM
- SEDIMENT CONTROL SYSTEM AT CATCH BASIN
- TEST PIT

NOTE:

1. THE PROPOSED CATCH BASINS DO NOT PROVIDE THE MINIMUM COVER OVER THE PROPOSED PIPES FOR THE USE OF CTDOT STANDARD CATCH BASINS. THE CONTRACTOR SHALL PROVIDE SHOP DRAWINGS FOR SHALLOW COVER CATCH BASINS TO THE ENGINEER FOR APPROVAL. ALL CATCH BASINS SHALL BE CAPABLE OF WITHSTANDING HL-93 LOADING.
2. UNLESS NOTED OTHERWISE, PROPOSED TYPE "C" CATCH BASINS AND MANHOLES ARE TO BE INSTALLED WITH A 2' SUMP.
3. SEE SHEET NO. IGP-01 FOR ROADWAY GRADING INFORMATION.

REV.	DATE	REVISION DESCRIPTION	SHEET NO.

THE INFORMATION, INCLUDING ESTIMATED QUANTITIES OF WORK, SHOWN ON THESE SHEETS IS BASED ON LIMITED INVESTIGATIONS BY THE STATE AND IS IN NO WAY WARRANTED TO INDICATE THE CONDITIONS OF ACTUAL QUANTITIES OF WORK WHICH WILL BE REQUIRED.

Plotted Date: 3/19/2020

DESIGNER/DRAFTER: JE
CHECKED BY: SB
SCALE IN FEET 0 20 40
SCALE 1"=20'

STATE OF CONNECTICUT
DEPARTMENT OF TRANSPORTATION

Filename: ...\HW_MSH_139-103_DRN_01.dgn

SIGNATURE/BLOCK:
BL Companies
ARCHITECTURE
ENGINEERING
ENVIRONMENTAL
LAND SURVEYING

PROJECT TITLE:
RAILROAD-HIGHWAY GRADE CROSSING IMPROVEMENTS HARVEY LANE

TOWN: **SUFFIELD**

DRAWING TITLE: **DRAINAGE PLAN**

PROJECT NO. **139-103**
DRAWING NO. **DRN-01**
SHEET NO. **03.19**

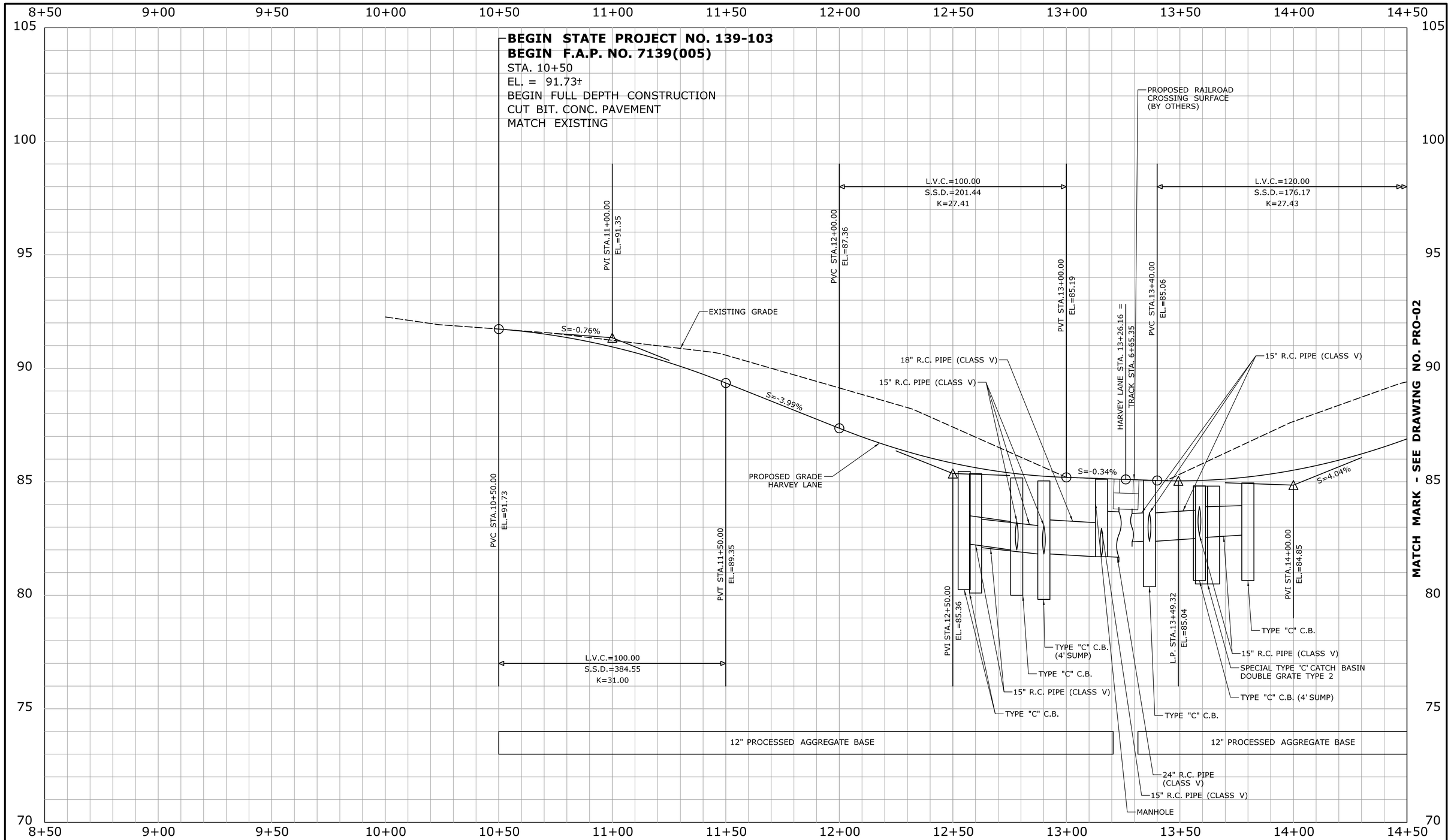

REV.	DATE	REVISION DESCRIPTION	SHEET NO.

THE INFORMATION, INCLUDING ESTIMATED QUANTITIES OF WORK, SHOWN ON THESE SHEETS IS BASED ON LIMITED INVESTIGATIONS BY THE STATE AND IS IN NO WAY WARRANTED TO INDICATE THE CONDITIONS OF ACTUAL QUANTITIES OF WORK WHICH WILL BE REQUIRED.

Plotted Date: 3/19/2020

DESIGNER/DRAFTER: **JE**

CHECKED BY: **SB**

HORIZ. SCALE IN FEET 0 20 40

VERT. SCALE IN FEET 0 2 4

STATE OF CONNECTICUT
DEPARTMENT OF TRANSPORTATION

Filename: ...\HW_MSH_139-103_PRO-01.dgn

SIGNATURE/ BLOCK:

STATE OF CONNECTICUT PROFESSIONAL ENGINEER

BL Companies
BL COMPANIES, INC.
355 RESEARCH PARKWAY
MERIDEN, CT 06450

PROJECT TITLE:
RAILROAD-HIGHWAY GRADE CROSSING IMPROVEMENTS HARVEY LANE

TOWN: **SUFFIELD**

DRAWING TITLE: **ROADWAY PROFILE**

PROJECT NO. **139-103**

DRAWING NO. **PRO-01**

SHEET NO. **03.20**

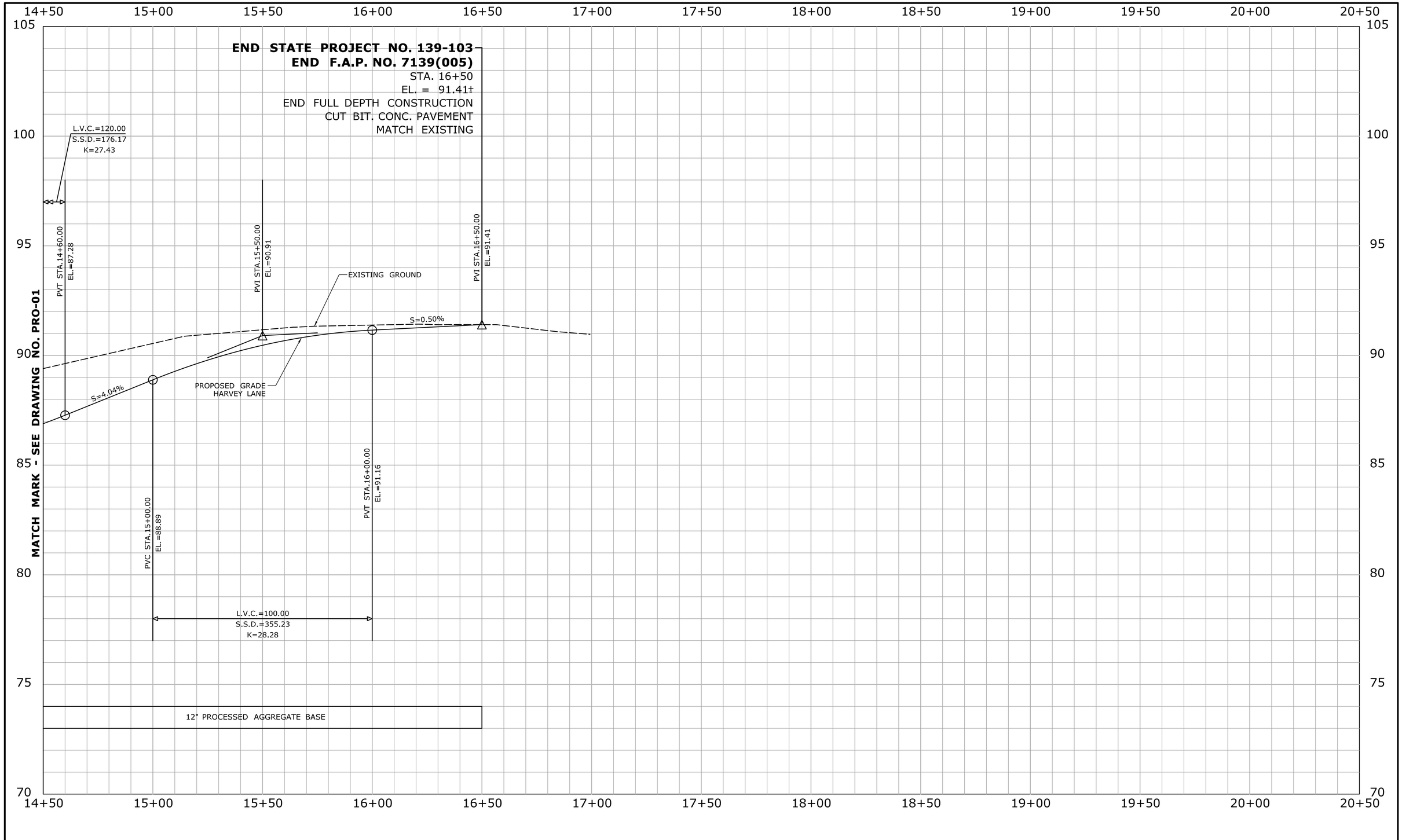

REV.	DATE	REVISION DESCRIPTION	SHEET NO.

THE INFORMATION, INCLUDING ESTIMATED QUANTITIES OF WORK, SHOWN ON THESE SHEETS IS BASED ON LIMITED INVESTIGATIONS BY THE STATE AND IS IN NO WAY WARRANTED TO INDICATE THE CONDITIONS OF ACTUAL QUANTITIES OF WORK WHICH WILL BE REQUIRED.

Plotted Date: 3/19/2020

DESIGNER/DRAFTER: **JE**

CHECKED BY: **SB**

HORIZ. SCALE IN FEET 0 20 40

VERT. SCALE IN FEET 0 2 4

STATE OF CONNECTICUT
DEPARTMENT OF TRANSPORTATION

Filename: ...\HW_MSH_139-103_PRO-02.dgn

SIGNATURE/ BLOCK:

STATE OF CONNECTICUT PROFESSIONAL ENGINEER

BL Companies
BL COMPANIES, INC.
355 RESEARCH PARKWAY
MERIDEN, CT 06450

PROJECT TITLE:
RAILROAD-HIGHWAY GRADE CROSSING IMPROVEMENTS HARVEY LANE

TOWN: **SUFFIELD**

DRAWING TITLE: **ROADWAY PROFILE**

PROJECT NO. **139-103**

DRAWING NO. **PRO-02**

SHEET NO. **03.21**

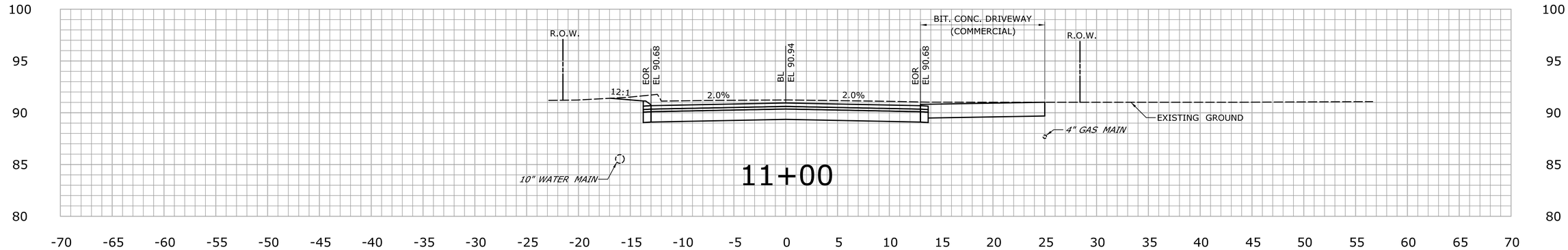

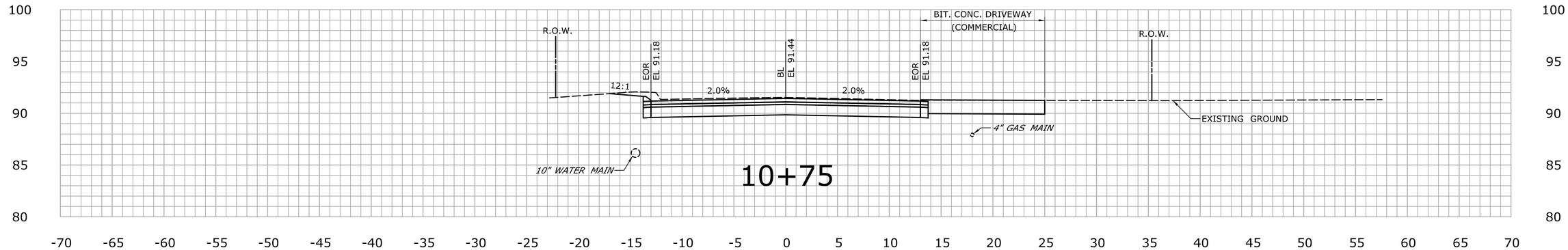

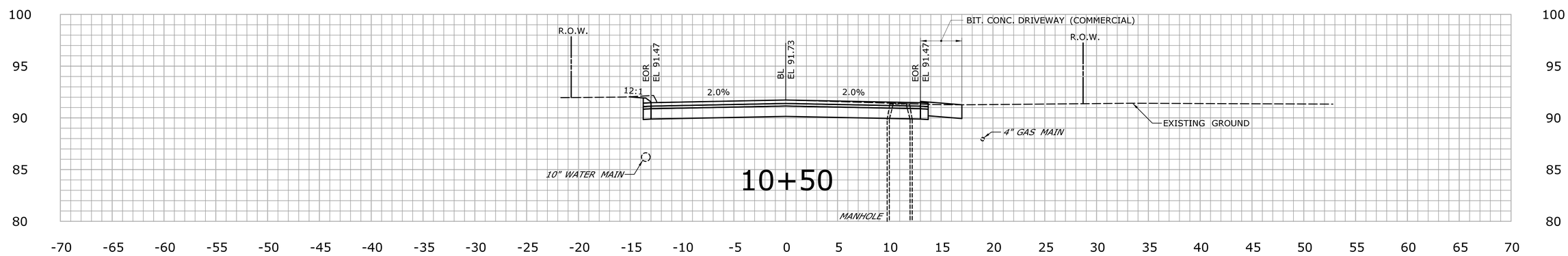

NOTE:

1) ALL ELEVATIONS GIVEN AT THE FACE OF CURBING APPLY TO PROPOSED GUTTER ELEVATION.

2) ALL UNDERGROUND UTILITIES AND INVERT ELEVATIONS ARE APPROXIMATE AND SHOULD BE VERIFIED BY THE CONTRACTOR BEFORE COMMENCING CONSTRUCTION.

3) REFER TO TYPICAL SECTIONS FOR A LEGEND OF MATERIALS AND THICKNESSES.

4) ELEVATION OF EXISTING SANITARY PIPE IS APPROXIMATELY 79.70'

5) SEE DRN-1 FOR PROPOSED DRAINAGE TOP OF FRAME AND INVERT ELEVATIONS.

REV.	DATE	REVISION DESCRIPTION	SHEET NO.

THE INFORMATION, INCLUDING ESTIMATED QUANTITIES OF WORK, SHOWN ON THESE SHEETS IS BASED ON LIMITED INVESTIGATIONS BY THE STATE AND IS IN NO WAY WARRANTED TO INDICATE THE CONDITIONS OF ACTUAL QUANTITIES OF WORK WHICH WILL BE REQUIRED.

Plotted Date: 3/19/2020

DESIGNER/DRAFTER: **JE**

CHECKED BY: **SB**

SCALE IN FEET 0 5 10

SCALE 1"=5'

STATE OF CONNECTICUT
DEPARTMENT OF TRANSPORTATION

Filename: ...\HW_MSH_139-103_XSC-01.dgn

SIGNATURE/ BLOCK:

STATE OF CONNECTICUT LICENSED PROFESSIONAL ENGINEER

BL Companies
BL COMPANIES, INC.
355 RESEARCH PARKWAY
MERIDEN, CT 06450

PROJECT TITLE:

RAILROAD-HIGHWAY GRADE CROSSING IMPROVEMENTS HARVEY LANE

TOWN: **SUFFIELD**

DRAWING TITLE: **ROADWAY CROSS SECTIONS**

PROJECT NO. **139-103**

DRAWING NO. **XSC-01**

SHEET NO. **03.22**

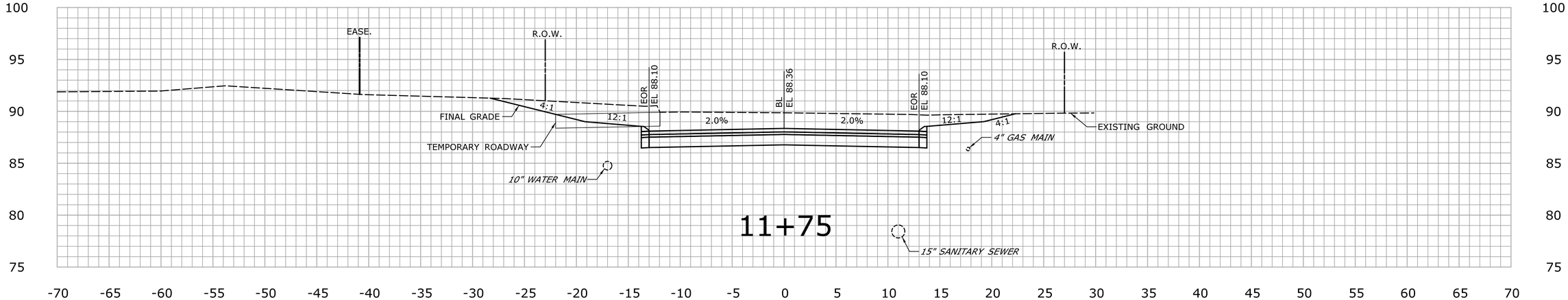

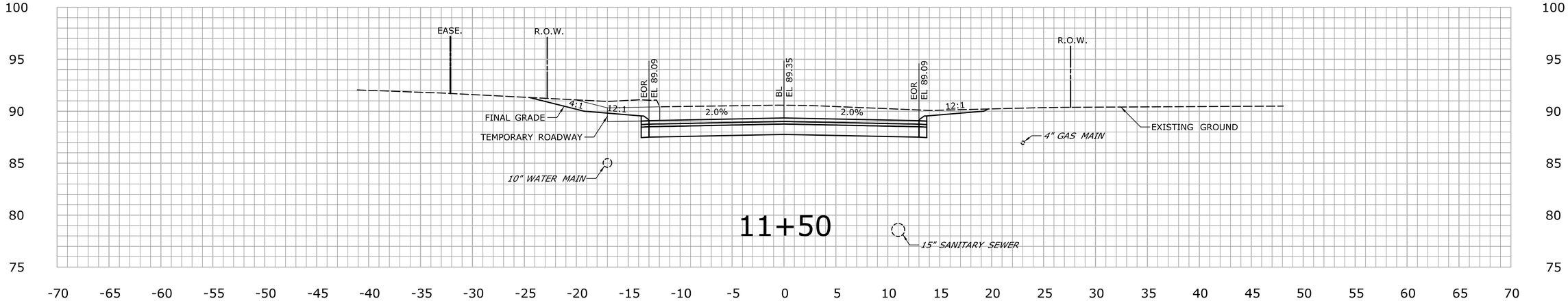

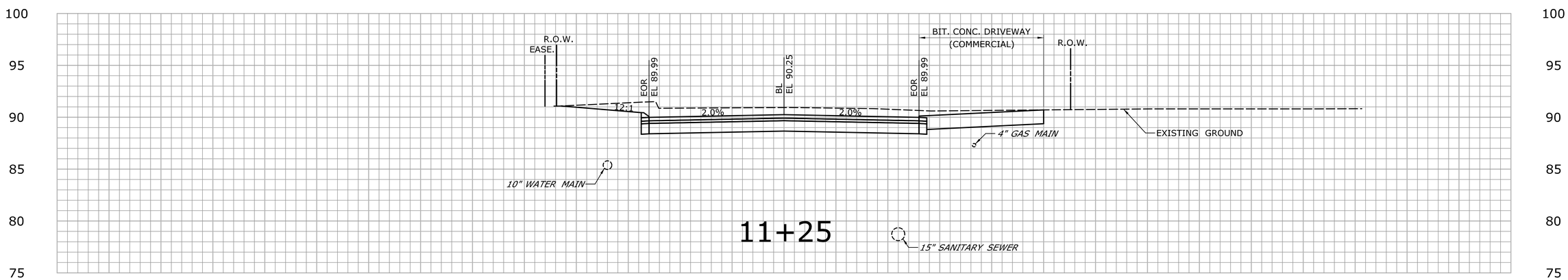

NOTE:

1) ALL ELEVATIONS GIVEN AT THE FACE OF CURBING APPLY TO PROPOSED GUTTER ELEVATION.

2) ALL UNDERGROUND UTILITIES AND INVERT ELEVATIONS ARE APPROXIMATE AND SHOULD BE VERIFIED BY THE CONTRACTOR BEFORE COMMENCING CONSTRUCTION.

3) REFER TO TYPICAL SECTIONS FOR A LEGEND OF MATERIALS AND THICKNESSES.

4) SEE DRN-1 FOR PROPOSED DRAINAGE TOP OF FRAME AND INVERT ELEVATIONS.

REV.	DATE	REVISION DESCRIPTION	SHEET NO.

THE INFORMATION, INCLUDING ESTIMATED QUANTITIES OF WORK, SHOWN ON THESE SHEETS IS BASED ON LIMITED INVESTIGATIONS BY THE STATE AND IS IN NO WAY WARRANTED TO INDICATE THE CONDITIONS OF ACTUAL QUANTITIES OF WORK WHICH WILL BE REQUIRED.

Plotted Date: 3/19/2020

DESIGNER/DRAFTER: **JE**

CHECKED BY: **SB**

SCALE IN FEET 0 5 10

SCALE 1"=5'

STATE OF CONNECTICUT
DEPARTMENT OF TRANSPORTATION

Filename: ...\HW_MSH_139-103_XSC-02.dgn

SIGNATURE/ BLOCK:

BL Companies
BL COMPANIES, INC.
355 RESEARCH PARKWAY
MERIDEN, CT 06450

PROJECT TITLE:

RAILROAD-HIGHWAY GRADE CROSSING IMPROVEMENTS HARVEY LANE

TOWN: **SUFFIELD**

DRAWING TITLE: **ROADWAY CROSS SECTIONS**

PROJECT NO. **139-103**

DRAWING NO. **XSC-02**

SHEET NO. **03.23**

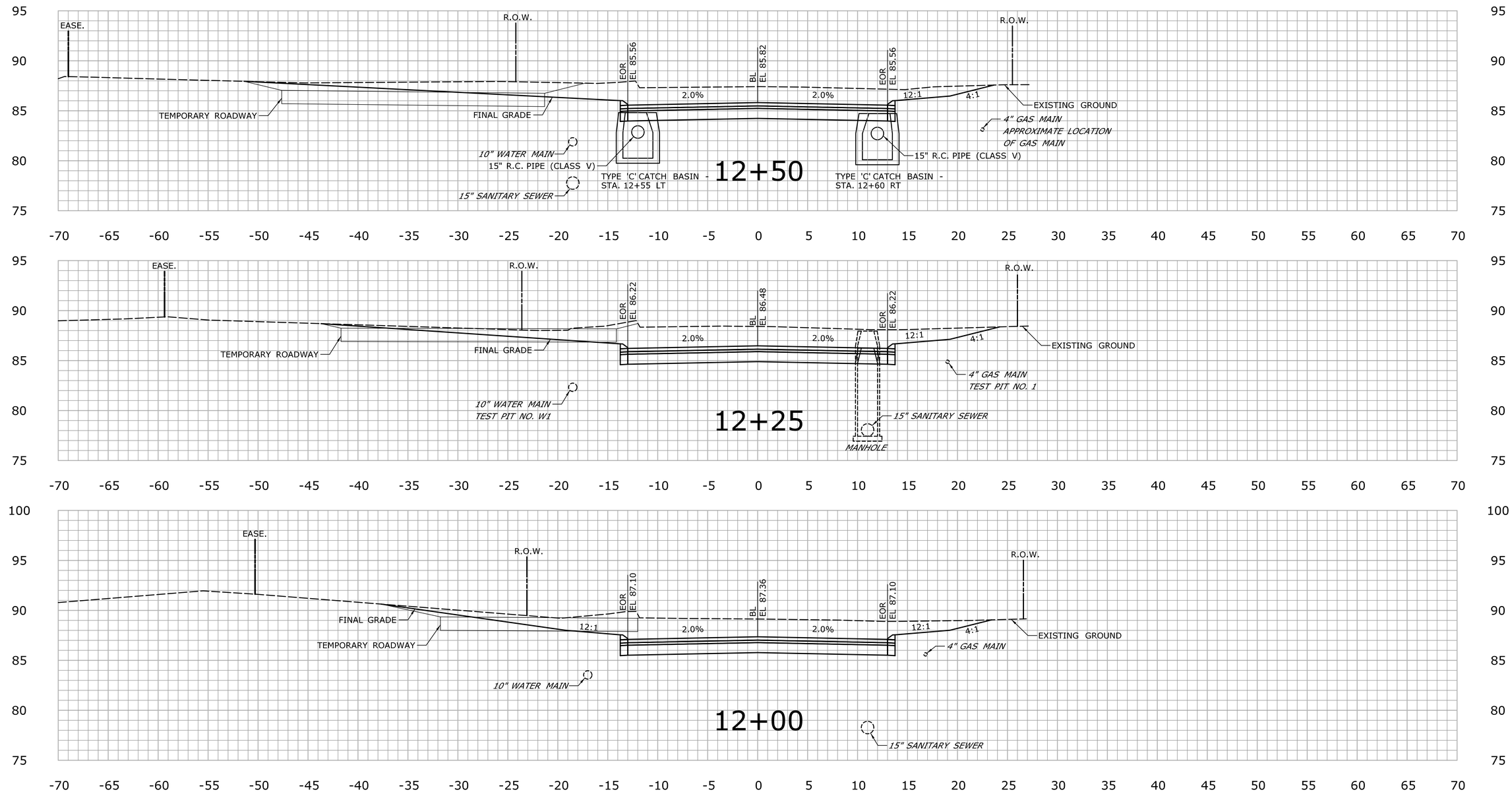

NOTE:

1) ALL ELEVATIONS GIVEN AT THE FACE OF CURBING APPLY TO PROPOSED GUTTER ELEVATION.

2) ALL UNDERGROUND UTILITIES AND INVERT ELEVATIONS ARE APPROXIMATE AND SHOULD BE VERIFIED BY THE CONTRACTOR BEFORE COMMENCING CONSTRUCTION.

3) REFER TO TYPICAL SECTIONS FOR A LEGEND OF MATERIALS AND THICKNESSES.

4) SEE DRN-1 FOR PROPOSED DRAINAGE TOP OF FRAME AND INVERT ELEVATIONS.

REV.	DATE	REVISION DESCRIPTION	SHEET NO.

THE INFORMATION, INCLUDING ESTIMATED QUANTITIES OF WORK, SHOWN ON THESE SHEETS IS BASED ON LIMITED INVESTIGATIONS BY THE STATE AND IS IN NO WAY WARRANTED TO INDICATE THE CONDITIONS OF ACTUAL QUANTITIES OF WORK WHICH WILL BE REQUIRED.

Plotted Date: 3/19/2020

DESIGNER/DRAFTER: **JE**

CHECKED BY: **SB**

SCALE IN FEET 0 5 10

SCALE 1"=5'

STATE OF CONNECTICUT
DEPARTMENT OF TRANSPORTATION

Filename: ...\HW_MSH_139-103_XSC-03.dgn

SIGNATURE/ BLOCK:

BL COMPANIES, INC.
355 RESEARCH PARKWAY
MERIDEN, CT 06450

PROJECT TITLE:

RAILROAD-HIGHWAY GRADE CROSSING IMPROVEMENTS HARVEY LANE

TOWN: **SUFFIELD**

DRAWING TITLE: **ROADWAY CROSS SECTIONS**

PROJECT NO. **139-103**

DRAWING NO. **XSC-03**

SHEET NO. **03.24**

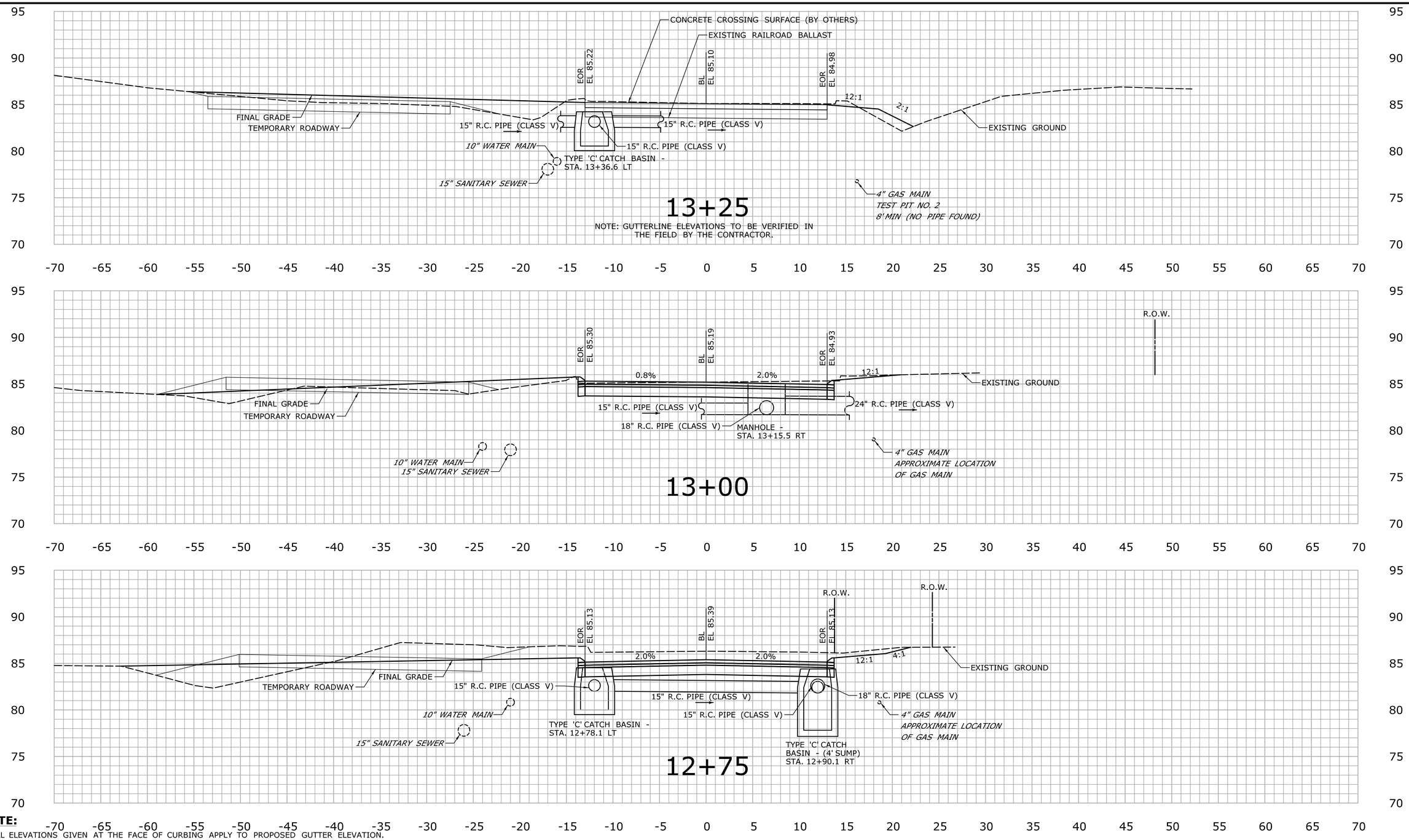

NOTE:

1) ALL ELEVATIONS GIVEN AT THE FACE OF CURBING APPLY TO PROPOSED GUTTER ELEVATION.

2) ALL UNDERGROUND UTILITIES AND INVERT ELEVATIONS ARE APPROXIMATE AND SHOULD BE VERIFIED BY THE CONTRACTOR BEFORE COMMENCING CONSTRUCTION.

3) REFER TO TYPICAL SECTIONS FOR A LEGEND OF MATERIALS AND THICKNESSES.

4) SEE DRN-1 FOR PROPOSED DRAINAGE TOP OF FRAME AND INVERT ELEVATIONS.

REV.	DATE	REVISION DESCRIPTION	SHEET NO.

THE INFORMATION, INCLUDING ESTIMATED QUANTITIES OF WORK, SHOWN ON THESE SHEETS IS BASED ON LIMITED INVESTIGATIONS BY THE STATE AND IS IN NO WAY WARRANTED TO INDICATE THE CONDITIONS OF ACTUAL QUANTITIES OF WORK WHICH WILL BE REQUIRED.

Plotted Date: 3/19/2020

DESIGNER/DRAFTER: **JE**

CHECKED BY: **SB**

SCALE IN FEET 0 5 10

SCALE 1"=5'

STATE OF CONNECTICUT
DEPARTMENT OF TRANSPORTATION

Filename: ...\HW_MSH_139-103_XSC-04.dgn

SIGNATURE/ BLOCK:

STATE OF CONNECTICUT PROFESSIONAL ENGINEER

BL Companies
BL COMPANIES, INC.
355 RESEARCH PARKWAY
MERIDEN, CT 06450

PROJECT TITLE:

RAILROAD-HIGHWAY GRADE CROSSING IMPROVEMENTS HARVEY LANE

TOWN: **SUFFIELD**

DRAWING TITLE: **ROADWAY CROSS SECTIONS**

PROJECT NO. **139-103**

DRAWING NO. **XSC-04**

SHEET NO. **03.25**

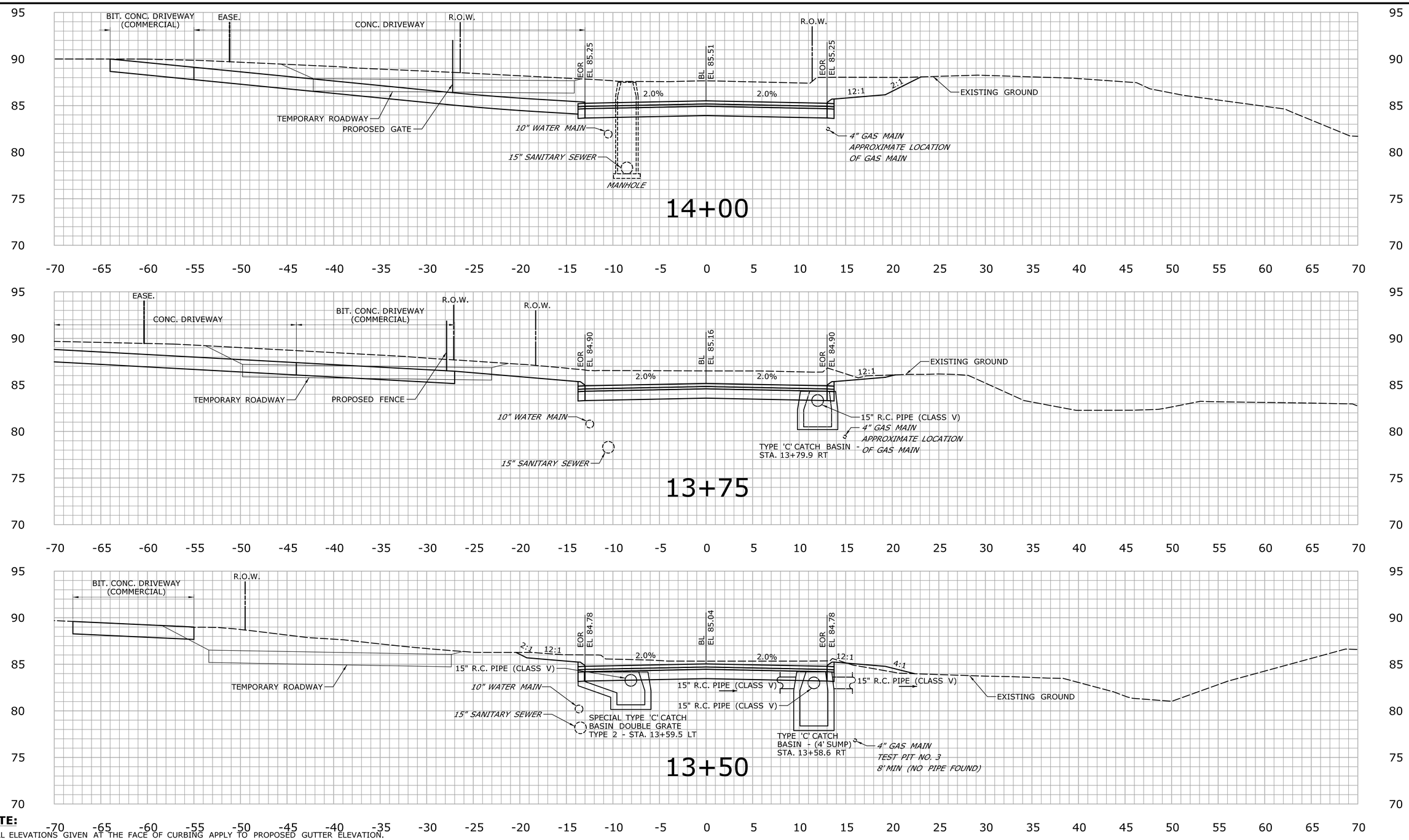

NOTE:

1) ALL ELEVATIONS GIVEN AT THE FACE OF CURBING APPLY TO PROPOSED GUTTER ELEVATION.

2) ALL UNDERGROUND UTILITIES AND INVERT ELEVATIONS ARE APPROXIMATE AND SHOULD BE VERIFIED BY THE CONTRACTOR BEFORE COMMENCING CONSTRUCTION.

3) REFER TO TYPICAL SECTIONS FOR A LEGEND OF MATERIALS AND THICKNESSES.

4) SEE DRN-1 FOR PROPOSED DRAINAGE TOP OF FRAME AND INVERT ELEVATIONS.

REV.	DATE	REVISION DESCRIPTION	SHEET NO.

THE INFORMATION, INCLUDING ESTIMATED QUANTITIES OF WORK, SHOWN ON THESE SHEETS IS BASED ON LIMITED INVESTIGATIONS BY THE STATE AND IS IN NO WAY WARRANTED TO INDICATE THE CONDITIONS OF ACTUAL QUANTITIES OF WORK WHICH WILL BE REQUIRED.

Plotted Date: 3/19/2020

DESIGNER/DRAFTER: **JE**

CHECKED BY: **SB**

SCALE IN FEET 0 5 10

SCALE 1"=5'

STATE OF CONNECTICUT
DEPARTMENT OF TRANSPORTATION

Filename: ...\HW_MSH_139-103_XSC-05.dgn

SIGNATURE/ BLOCK:

STATE OF CONNECTICUT PROFESSIONAL ENGINEER

BL Companies

BL COMPANIES, INC.
355 RESEARCH PARKWAY
MERIDEN, CT 06450

PROJECT TITLE:

RAILROAD-HIGHWAY GRADE CROSSING IMPROVEMENTS HARVEY LANE

TOWN: **SUFFIELD**

DRAWING TITLE: **ROADWAY CROSS SECTIONS**

PROJECT NO. **139-103**

DRAWING NO. **XSC-05**

SHEET NO. **03.26**

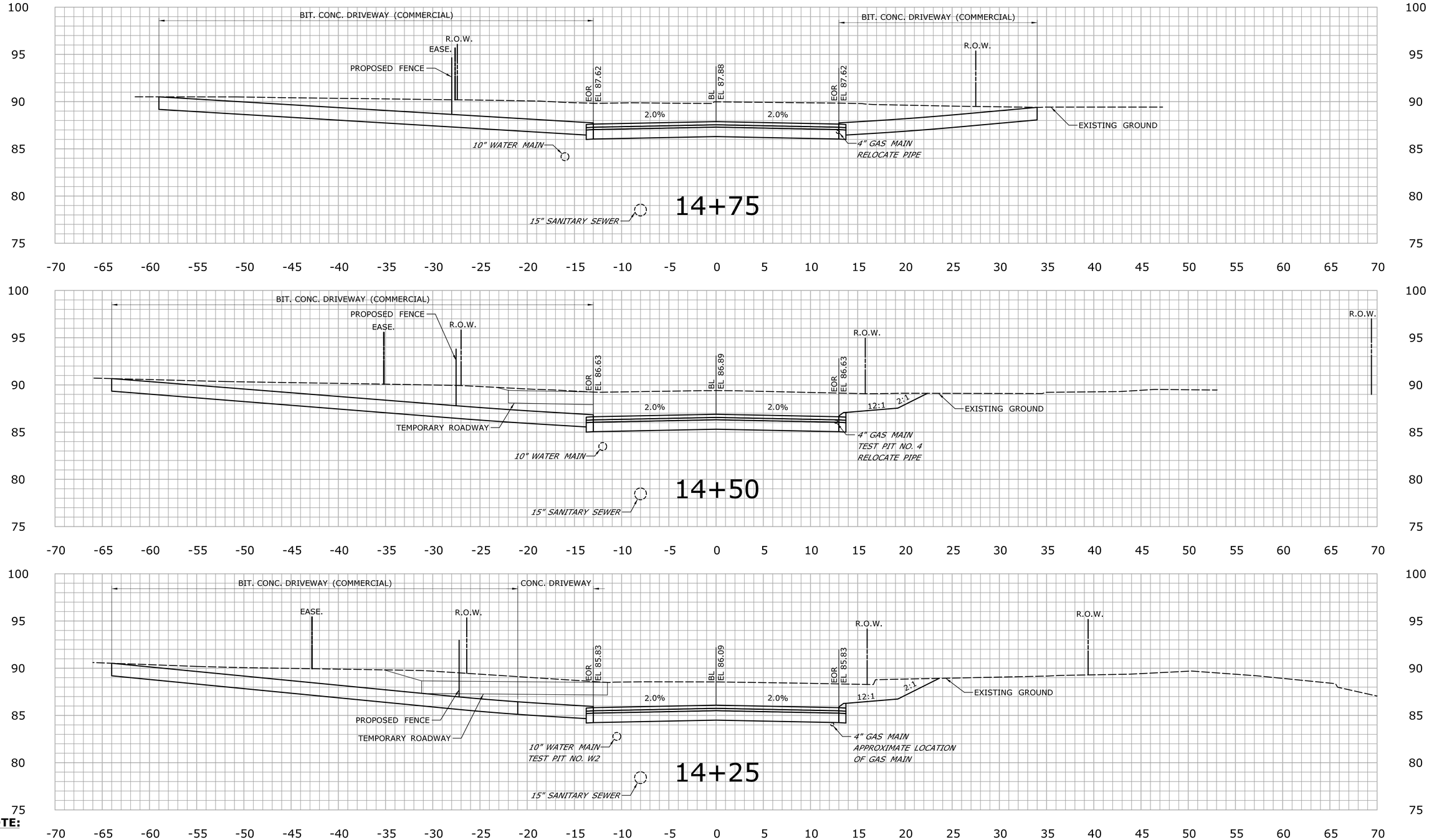

NOTE:

1) ALL ELEVATIONS GIVEN AT THE FACE OF CURBING APPLY TO PROPOSED GUTTER ELEVATION.

2) ALL UNDERGROUND UTILITIES AND INVERT ELEVATIONS ARE APPROXIMATE AND SHOULD BE VERIFIED BY THE CONTRACTOR BEFORE COMMENCING CONSTRUCTION.

3) REFER TO TYPICAL SECTIONS FOR A LEGEND OF MATERIALS AND THICKNESSES.

4) SEE DRN-1 FOR PROPOSED DRAINAGE TOP OF FRAME AND INVERT ELEVATIONS.

REV.	DATE	REVISION DESCRIPTION	SHEET NO.

THE INFORMATION, INCLUDING ESTIMATED QUANTITIES OF WORK, SHOWN ON THESE SHEETS IS BASED ON LIMITED INVESTIGATIONS BY THE STATE AND IS IN NO WAY WARRANTED TO INDICATE THE CONDITIONS OF ACTUAL QUANTITIES OF WORK WHICH WILL BE REQUIRED.

Plotted Date: 3/19/2020

DESIGNER/DRAFTER: **JE**

CHECKED BY: **SB**

SCALE IN FEET 0 5 10

SCALE 1"=5'

STATE OF CONNECTICUT
DEPARTMENT OF TRANSPORTATION

Filename: ...\HW_MSH_139-103_XSC-06.dgn

SIGNATURE/ BLOCK:

STATE OF CONNECTICUT LICENSED PROFESSIONAL ENGINEER No. 31194

BL Companies
BL COMPANIES, INC.
355 RESEARCH PARKWAY
MERIDEN, CT 06450

PROJECT TITLE:
RAILROAD-HIGHWAY GRADE CROSSING IMPROVEMENTS HARVEY LANE

TOWN: **SUFFIELD**

DRAWING TITLE: **ROADWAY CROSS SECTIONS**

PROJECT NO. **139-103**

DRAWING NO. **XSC-06**

SHEET NO. **03.27**

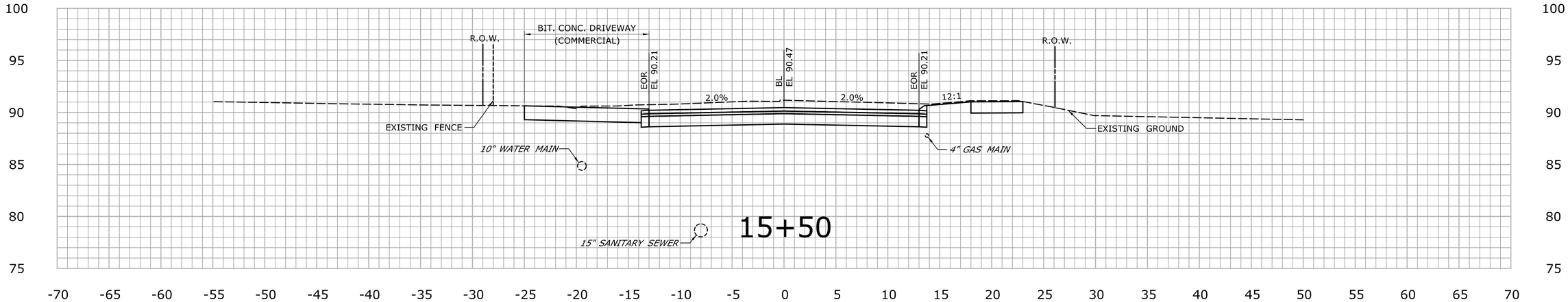

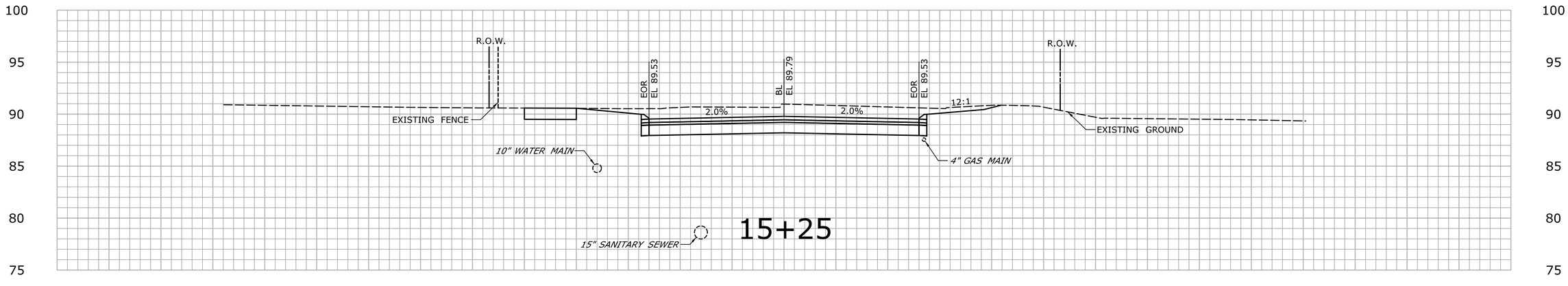

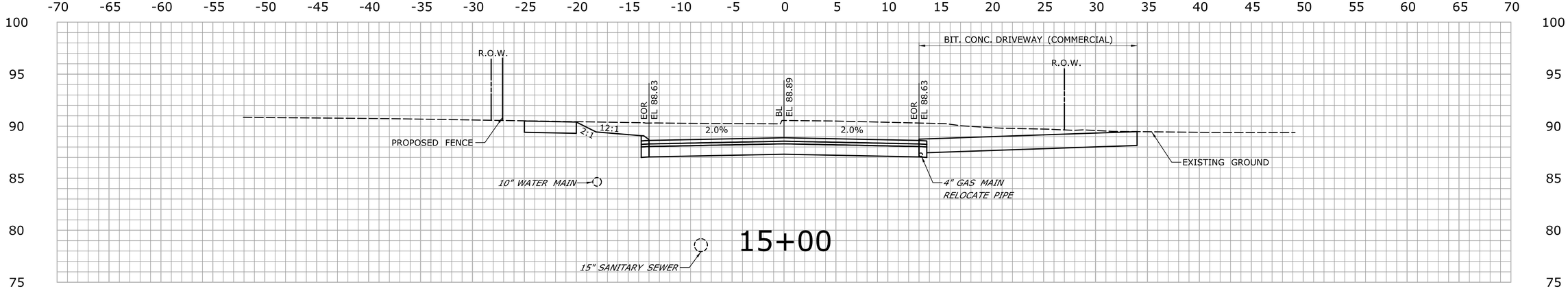

NOTE:

1) ALL ELEVATIONS GIVEN AT THE FACE OF CURBING APPLY TO PROPOSED GUTTER ELEVATION.

2) ALL UNDERGROUND UTILITIES AND INVERT ELEVATIONS ARE APPROXIMATE AND SHOULD BE VERIFIED BY THE CONTRACTOR BEFORE COMMENCING CONSTRUCTION.

3) REFER TO TYPICAL SECTIONS FOR A LEGEND OF MATERIALS AND THICKNESSES.

4) SEE DRN-1 FOR PROPOSED DRAINAGE TOP OF FRAME AND INVERT ELEVATIONS.

REV.	DATE	REVISION DESCRIPTION	SHEET NO.

THE INFORMATION, INCLUDING ESTIMATED QUANTITIES OF WORK, SHOWN ON THESE SHEETS IS BASED ON LIMITED INVESTIGATIONS BY THE STATE AND IS IN NO WAY WARRANTED TO INDICATE THE CONDITIONS OF ACTUAL QUANTITIES OF WORK WHICH WILL BE REQUIRED.

Plotted Date: 3/19/2020

DESIGNER/DRAFTER: **JE**

CHECKED BY: **SB**

SCALE IN FEET 0 5 10

SCALE 1"=5'

STATE OF CONNECTICUT
DEPARTMENT OF TRANSPORTATION

Filename: ...\HW_MSH_139-103_XSC-07.dgn

SIGNATURE/ BLOCK:

STATE OF CONNECTICUT LICENSED PROFESSIONAL ENGINEER

BL Companies
BL COMPANIES, INC.
355 RESEARCH PARKWAY
MERIDEN, CT 06450

PROJECT TITLE:
RAILROAD-HIGHWAY GRADE CROSSING IMPROVEMENTS HARVEY LANE

TOWN: **SUFFIELD**

DRAWING TITLE: **ROADWAY CROSS SECTIONS**

PROJECT NO. **139-103**

DRAWING NO. **XSC-07**

SHEET NO. **03.28**

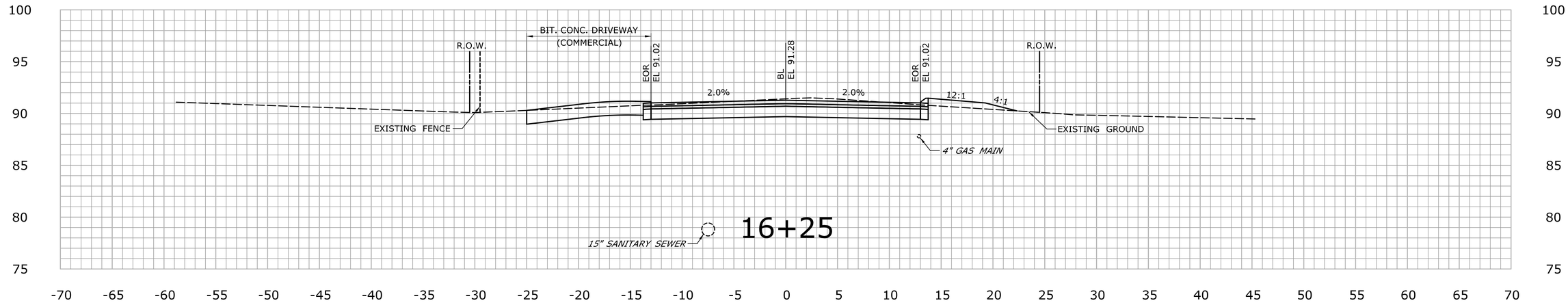

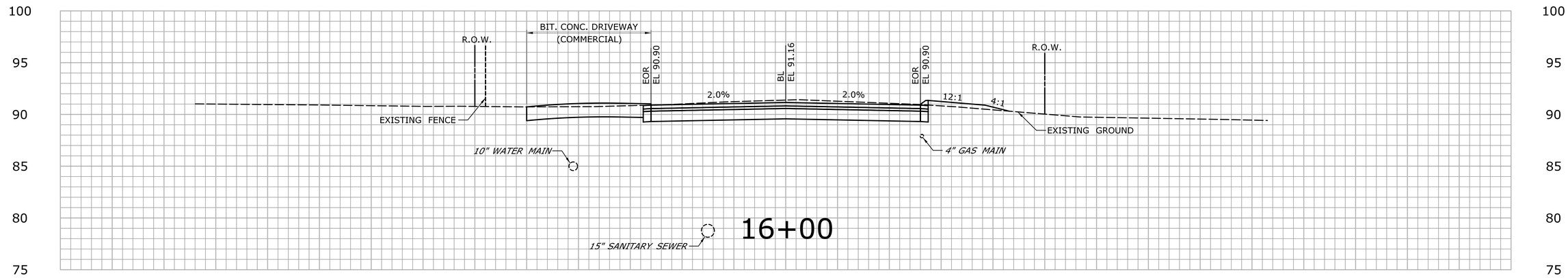

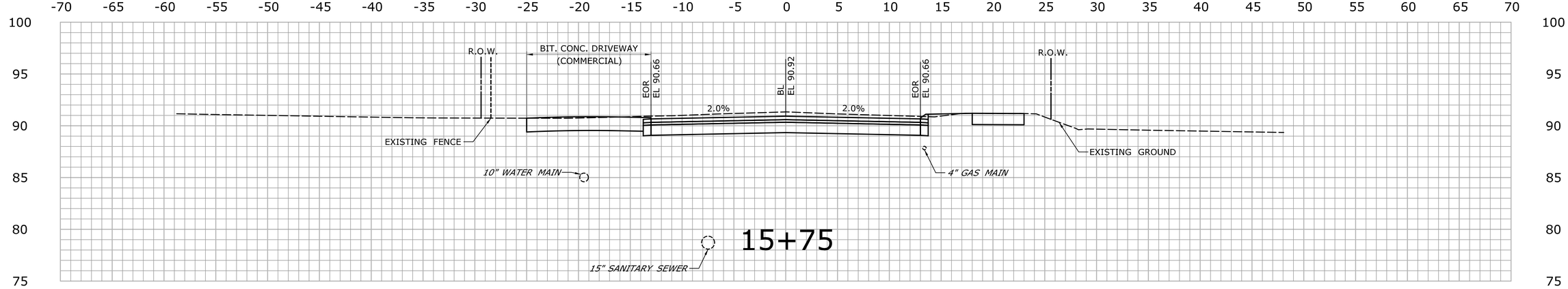

NOTE:

1) ALL ELEVATIONS GIVEN AT THE FACE OF CURBING APPLY TO PROPOSED GUTTER ELEVATION.

2) ALL UNDERGROUND UTILITIES AND INVERT ELEVATIONS ARE APPROXIMATE AND SHOULD BE VERIFIED BY THE CONTRACTOR BEFORE COMMENCING CONSTRUCTION.

3) REFER TO TYPICAL SECTIONS FOR A LEGEND OF MATERIALS AND THICKNESSES.

4) SEE DRN-1 FOR PROPOSED DRAINAGE TOP OF FRAME AND INVERT ELEVATIONS.

REV.	DATE	REVISION DESCRIPTION	SHEET NO.

THE INFORMATION, INCLUDING ESTIMATED QUANTITIES OF WORK, SHOWN ON THESE SHEETS IS BASED ON LIMITED INVESTIGATIONS BY THE STATE AND IS IN NO WAY WARRANTED TO INDICATE THE CONDITIONS OF ACTUAL QUANTITIES OF WORK WHICH WILL BE REQUIRED.

Plotted Date: 3/19/2020

DESIGNER/DRAFTER: **JE**

CHECKED BY: **SB**

SCALE IN FEET 0 5 10

SCALE 1"=5'

STATE OF CONNECTICUT
DEPARTMENT OF TRANSPORTATION

Filename: ..\HW_MSH_139-103_XSC-08.dgn

SIGNATURE/ BLOCK:

STATE OF CONNECTICUT LICENSED PROFESSIONAL ENGINEER

BL Companies
BL COMPANIES, INC.
355 RESEARCH PARKWAY
MERIDEN, CT 06450

PROJECT TITLE:
RAILROAD-HIGHWAY GRADE CROSSING IMPROVEMENTS HARVEY LANE

TOWN: **SUFFIELD**

DRAWING TITLE: **ROADWAY CROSS SECTIONS**

PROJECT NO. **139-103**

DRAWING NO. **XSC-08**

SHEET NO. **03.29**

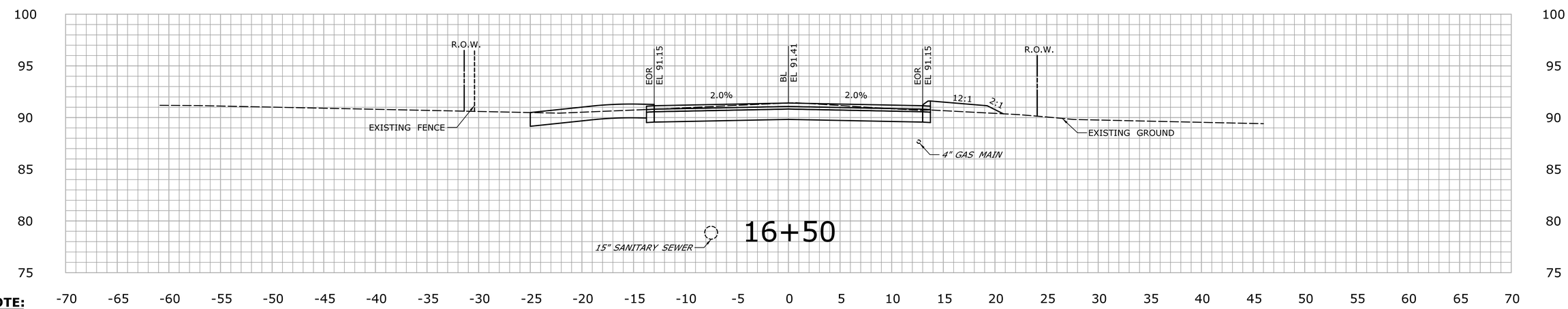

NOTE:

1) ALL ELEVATIONS GIVEN AT THE FACE OF CURBING APPLY TO PROPOSED GUTTER ELEVATION.

2) ALL UNDERGROUND UTILITIES AND INVERT ELEVATIONS ARE APPROXIMATE AND SHOULD BE VERIFIED BY THE CONTRACTOR BEFORE COMMENCING CONSTRUCTION.

3) REFER TO TYPICAL SECTIONS FOR A LEGEND OF MATERIALS AND THICKNESSES.

4) SEE DRN-1 FOR PROPOSED DRAINAGE TOP OF FRAME AND INVERT ELEVATIONS.

REV.	DATE	REVISION DESCRIPTION	SHEET NO.

THE INFORMATION, INCLUDING ESTIMATED QUANTITIES OF WORK, SHOWN ON THESE SHEETS IS BASED ON LIMITED INVESTIGATIONS BY THE STATE AND IS IN NO WAY WARRANTED TO INDICATE THE CONDITIONS OF ACTUAL QUANTITIES OF WORK WHICH WILL BE REQUIRED.

Plotted Date: 3/19/2020

DESIGNER/DRAFTER: **JE**

CHECKED BY: **SB**

SCALE IN FEET 0 5 10

SCALE 1"=5'

STATE OF CONNECTICUT
DEPARTMENT OF TRANSPORTATION

Filename: ...\HW_MSH_139-103_XSC-09.dgn

SIGNATURE/ BLOCK:

BL Companies
BL COMPANIES, INC.
355 RESEARCH PARKWAY
MERIDEN, CT 06450

PROJECT TITLE:

RAILROAD-HIGHWAY GRADE CROSSING IMPROVEMENTS HARVEY LANE

TOWN: **SUFFIELD**

DRAWING TITLE: **ROADWAY CROSS SECTIONS**

PROJECT NO. **139-103**

DRAWING NO. **XSC-09**

SHEET NO. **03.30**