*ONLY STANDARD SHEETS MARKED WITH AN "✓" ARE IN THIS PROJECT #

**REVISED OR ADDED

✓*	SHEET NO.	TITLE	APPROVAL DATE**
	HW-506_01	ENDWALLS, SLOPE PAVED INLETS AND OUTLETS	1-26-12
	HW-506_02	TYPE "D-G" & "L" ENDWALLS	7-13-12
	HW-506_03	ENDWALLS FOR PIPE ARCH	9-18-09
✓	HW-507_01	TYPE "C", "C-L" & DROP INLET CATCH BASIN	7-24-13
	HW-507_02	TYPE "C", "C-L" & DOUBLE GRATE TYPE - I	7-24-13
	HW-507_03	TYPE "C", "C-L" & DOUBLE GRATE TYPE - II	7-24-13
	HW-507_04	TYPE "C", "C-L" & ROUND PRECAST CONCRETE CB	11-10-11
	HW-507_05	TYPE "C" & "C-L" PRECAST CONCRETE CB DOUBLE GRATE TYPE - I	11-10-11
	HW-507_06	TYPE "C" & "C-L" PRECAST CONCRETE CB DOUBLE GRATE TYPE - II	11-10-11
✓	HW-507_07	TYPE "C" & "C-L" CATCH BASIN TOPS AND CURBS	11-10-11
✓	HW-507_08	CATCH BASIN FRAMES AND GRATES	9-18-09
	HW-507_09	HEAVY DUTY LOCK DOWN TOPS	7-12-12
✓	HW-507_10	MANHOLE - FRAME & COVER	7-24-13
✓	HW-651_01	C.C.M. PIPE INSTALLATIONS IN FILL & ROCK SLOPES & PIPE TRENCH DETAIL	7-24-13
	HW-651_02	SLOTTED DRAIN PIPE 12"- 15"-18"-24"-30" (305-381-457-610-762)	7-12-12
✓	HW-652_01	PIPE ENDS	7-24-13
	HW-751_01	UNDERDRAINS AND UNDERDRAIN OUTLETS	7-12-12
	HW-803_01a	PAVED APRONS	6-07-17
	HW-803_01b	PAVED DITCHES AND PAVED CHANNELS	6-07-17
	HW-811_01	CONCRETE CURBING	6-07-17
	HW-813_01	GRANITE STONE TRANSITION CURBING	7-24-13
	HW-813_02	STONE CURBING	6-07-17
✓	HW-815_01	BITUMINOUS CONCRETE CURBING	6-07-17
	HW-821_01a	TRANSITION - 45" (1145) F-SHAPE TO 45" (1145) VERTICAL SHAPE SHEET 1	1-26-12
	HW-821_01b	TRANSITION - 45" (1145) F-SHAPE TO 45" (1145) VERTICAL SHAPE SHEET 2	10-18-10
	HW-821_01c	TRANSITION - 45" (1145) F-SHAPE TO 45" (1145) VERTICAL SHAPE SHEET 3	1-26-12
	HW-821_02a	45" (1145) F-SHAPE PRECAST CONCRETE BARRIER CURB SHEET 1	7-24-13
	HW-821_02b	45" (1145) F-SHAPE PRECAST CONCRETE BARRIER CURB SHEET 2	7-24-13
	HW-821_03a	TRANSITION - 32" (813) JERSEY SHAPE TO 45" (1145) VERTICAL SHAPE SHEET 1	1-26-12
	HW-821_03b	TRANSITION - 32" (813) JERSEY SHAPE TO 45" (1145) VERTICAL SHAPE SHEET 2	10-18-10
	HW-821_03c	TRANSITION - 32" (813) JERSEY SHAPE TO 45" (1145) VERTICAL SHAPE SHEET 3	10-18-10
	HW-821_03d	TRANSITION - 32" (813) JERSEY SHAPE TO 45" (1145) VERTICAL SHAPE SHEET 4	10-18-10
	HW-821_03e	TRANSITION - 32" (813) JERSEY SHAPE TO 45" (1145) F-SHAPE	7-24-13

✓*	SHEET NO.	TITLE	APPROVAL DATE**
	HW-821_04a	MERRITT PARKWAY NARROW MEDIAN BARRIER	6-09-11
	HW-821_04b	MERRITT PARKWAY - 2' (610) WIDE MEDIAN BARRIER AND ROADSIDE BARRIER	7-24-13
	HW-821_05a	TRANSITION - 45" (1145) F-SHAPE TO 54" (1372) VERTICAL SHAPE SHEET 1	1-26-12
	HW-821_05b	TRANSITION - 45" (1145) F-SHAPE TO 54" (1372) VERTICAL SHAPE SHEET 2	1-26-12
	HW-821_06	54" (1372) VERTICAL SHAPE BARRIER	2-06-12
	HW-821_07	MISCELLANOUS DETAILS FOR BARRIER TRANSITIONS	7-12-12
	HW-822_01	TEMPORARY PRECAST CONCRETE BARRIER CURB	7-24-13
	HW-905_01	STONE WALL FENCE	1-25-19
	HW-906_01	WIRE FENCE	1-25-19
	HW-910_01	W-BEAM METAL BEAM RAIL HARDWARE	6-09-11
	HW-910_02	METAL BEAM RAIL (TYPE R-B 350) GUIDERAIL	6-09-11
	HW-910_03	METAL BEAM RAIL (TYPE MD-B 350)	6-09-11
	HW-910_04	METAL BEAM RAIL (TYPE R-B 350) SYSTEMS 5, 5A, & 6	6-09-11
	HW-910_05	METAL BEAM RAIL R-B 350 SPAN TYPE I, II, III SECTIONS	7-24-13
	HW-910_06	R-B 350 BRIDGE ATTACHMENT SAFETY SHAPE PARAPET	6-09-11
	HW-910_07	R-B 350 BRIDGE ATTACHMENT VERTICAL SHAPE PARAPET	1-25-19
	HW-910_08	R-B 350 BRIDGE ATTACHMENT TRAILING END	6-09-11
	HW-910_09a	MISCELLANEOUS GUIDERAIL TRANSITIONS SHEET 1	1-26-12
	HW-910_09b	MISCELLANEOUS GUIDERAIL TRANSITIONS SHEET 2	7-25-12
	HW-910_10	METAL BEAM RAIL 8" (203) X 6" (152) BOX BEAM	7-24-13
	HW-910_11	CURVED GUIDERAIL TREATMENT DETAIL	7-25-12
	HW-910_12a	MERRITT PARKWAY GUIDERAIL ATTACHMENT - SYSTEM 2 & 3	7-24-13
	HW-910_12b	MERRITT PARKWAY GUIDERAIL	7-24-13
	HW-910_12c	MERRITT PARKWAY GUIDERAIL TRAILING END ATTACHMENTS	7-24-13
	HW-910_12d	MERRITT PARKWAY MEDIAN GUIDERAIL AND END ANCHOR	6-09-11
	HW-910_13a	THRIE-BEAM METAL BEAM RAIL HARDWARE	7-24-13
	HW-910_13b	THRIE-BEAM TRANSITIONS	7-24-13
	HW-910_14a	THRIE-BEAM 350 BRIDGE ATTACHMENT	6-09-11
	HW-910_14b	THRIE-BEAM 350 GUIDERAIL TRANSITION TO R-B 350 GUIDERAIL	6-09-11
	HW-910_15	MD-B 350 MEDIAN BARRIER SAFETY SHAPE ATTACHMENT TYPE I	6-09-11
	HW-910_16	MD-B 350 MEDIAN BARRIER SAFETY SHAPE ATTACHMENT TYPE II	6-09-11
	HW-910_17	R-B TERMINAL SECTION	7-24-13
	HW-910_18	METAL BEAM RAIL (TYPE MD-I)	10-18-10

REV.	DATE	REVISION DESCRIPTION
-	-	-
-	-	-
-	-	-
-	-	-
-	-	-
-	-	-
-	-	-

THE INFORMATION, INCLUDING ESTIMATED QUANTITIES OF WORK, SHOWN ON THESE SHEETS IS BASED ON LIMITED INVESTIGATIONS BY THE STATE AND IS IN NO WAY WARRANTED TO INDICATE THE CONDITIONS OF ACTUAL QUANTITIES OF WORK WHICH WILL BE REQUIRED.

Plotted Date: 1/23/2019

NOT TO SCALE

STATE OF CONNECTICUT
DEPARTMENT OF TRANSPORTATION

Filename: CTDOT_HIGHWAY_STD_[_1-23-19_].dgn Model: 1 - HW-INX_1

CTDOT
STANDARD SHEET

OFFICE OF ENGINEERING

STANDARD SHEET TITLE:

HIGHWAY
STANDARD SHEET INDEX

STANDARD SHEET NO.:

HW_INX

1 of 2

*ONLY STANDARD SHEETS MARKED WITH AN "✓" ARE IN THIS PROJECT #

**REVISED OR ADDED

✓*	SHEET NO.	TITLE	APPROVAL DATE**
	HW-910_19a	METAL BEAM RAIL (MODIFIED TYPE R-I) AND END ANCHORAGE TYPE I	7-24-13
	HW-910_19b	METAL BEAM RAIL (MODIFIED TYPE R-I) AND END ANCHORAGE TYPE II	7-24-13
	HW-910_19c	METAL BEAM RAIL (MODIFIED TYPE R-I) SYSTEMS 2 AND 3	7-24-13
	HW-910_20	MASH W-BEAM HARDWARE	1-05-18
	HW-910_21	METAL BEAM RAIL (R-B MASH) GUIDERAIL	1-25-19
	HW-910_22	METAL BEAM RAIL (MD-B MASH) GUIDERAIL	1-05-18
	HW-910_23	METAL BEAM RAIL (R-B MASH) HALF AND QUARTER POST SPACING	1-05-18
	HW-910_24	METAL BEAM RAIL SPAN SECTION TYPES II AND III	1-05-18
	HW-910_25	METAL BEAM RAIL TRANSITION 350 TO MASH	1-05-18
	HW-911_01	R-B END ANCHORAGE TYPE I AND II	1-25-19
	HW-911_02	MD-B END ANCHORAGE TYPE I	1-05-18
	HW-911_03	ANCHOR IN EARTH CUT SLOPE & ANCHOR IN ROCK CUT SLOPE	10-18-10
	HW-911_05	MERRITT PARKWAY GUIDERAIL END ANCHORS	7-24-13
✓	HW-913_01a	CHAIN LINK FENCE	5-06-19
✓	HW-913_01b	CHAIN LINK FENCE HARDWARE	5-06-19
✓	HW-913_02	CHAIN LINK FENCE GATES	5-06-19
	HW-918_01a	THREE CABLE GUIDERAIL (I-BEAM POSTS) SHEET 1	7-24-13
	HW-918_01b	THREE CABLE GUIDERAIL (I-BEAM POSTS) SHEET 2	1-26-12
	HW-918_01c	THREE CABLE GUIDERAIL (I-BEAM POSTS) SHEET 3	7-24-13
✓	HW-921_01	DRIVEWAY RAMPS AND SIDEWALKS	6-07-17
	HW-949_01a	LANDSCAPE PLANTING	6-15-19
	HW-949_01b	TREE STAKING	6-15-19
	HW-1800_01	GRADING PLAN FOR IMPACT ATTENUATION SYSTEMS (FLARED AND TANGENTIAL)	1-25-19
	HW-1800_02	GRADING PLAN FOR IMPACT ATTENUATION SYSTEM (MEDIAN/GORE)	1-25-19

✓*	SHEET NO.	TITLE	APPROVAL DATE**

REV.	DATE	REVISION DESCRIPTION
-	-	-
-	-	-
-	-	-
-	-	-
-	-	-
-	-	-
-	-	-

THE INFORMATION, INCLUDING ESTIMATED QUANTITIES OF WORK, SHOWN ON THESE SHEETS IS BASED ON LIMITED INVESTIGATIONS BY THE STATE AND IS IN NO WAY WARRANTED TO INDICATE THE CONDITIONS OF ACTUAL QUANTITIES OF WORK WHICH WILL BE REQUIRED.

Plotted Date: 6/20/2019

NOT TO SCALE

STATE OF CONNECTICUT
DEPARTMENT OF TRANSPORTATION

Filename: CTDOT_HIGHWAY_STD [5-28-19].dgn Model: 2 - HW-INX_2

CTDOT
STANDARD SHEET

OFFICE OF ENGINEERING

STANDARD SHEET TITLE:

HIGHWAY
STANDARD SHEET INDEX

STANDARD SHEET NO.:

HW_INX
2 of 2

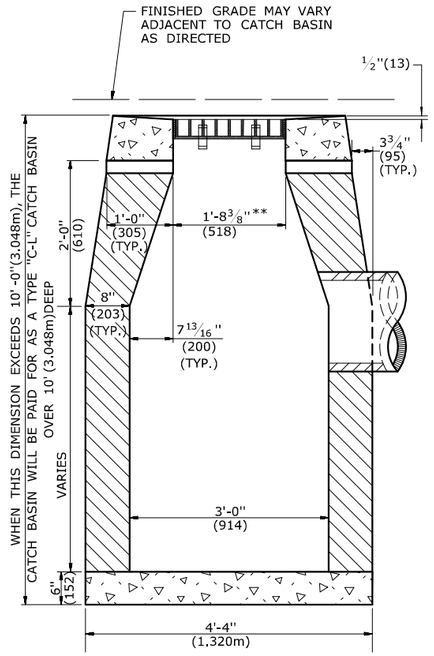

SECTION B

TYPE "C-L" CATCH BASIN

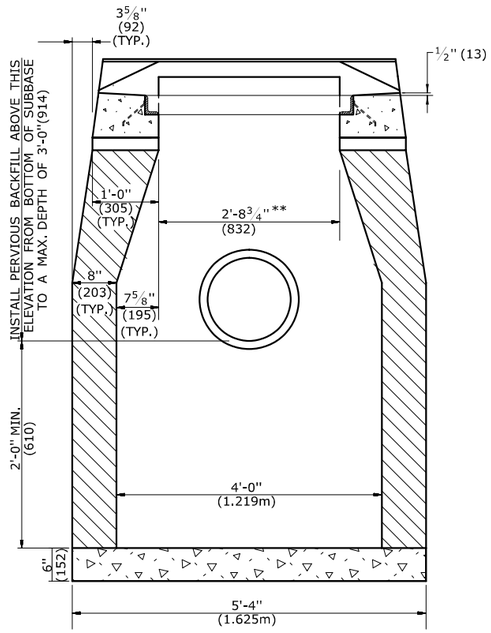

SECTION A

TYPE "C" & "C-L" CATCH BASIN (TYPE "C" TOP SHOWN)

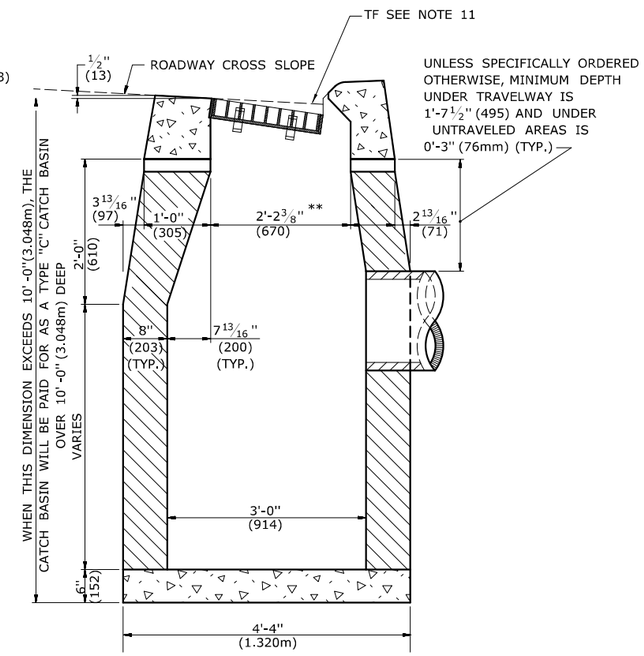

SECTION B

TYPE "C" CATCH BASIN

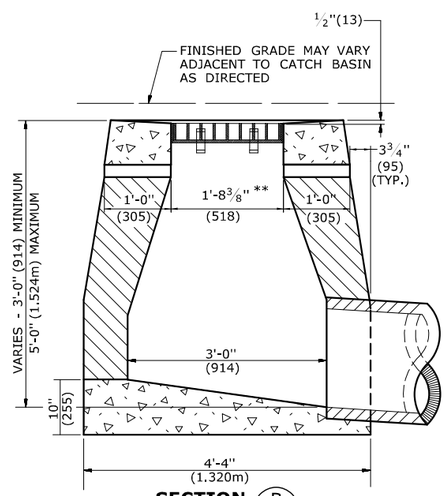

SECTION B

TYPE "C-L" DROP INLET

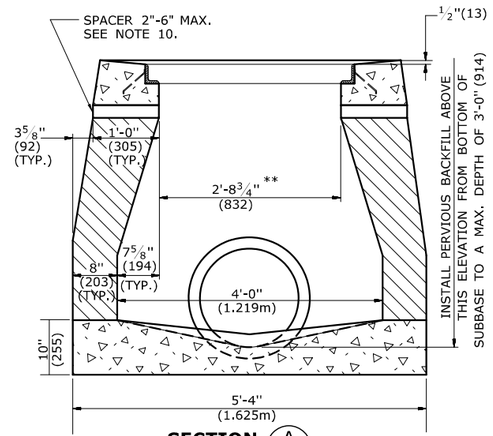

SECTION A

TYPE "C" & "C-L" DROP INLET (TYPE "C-L" TOP SHOWN)

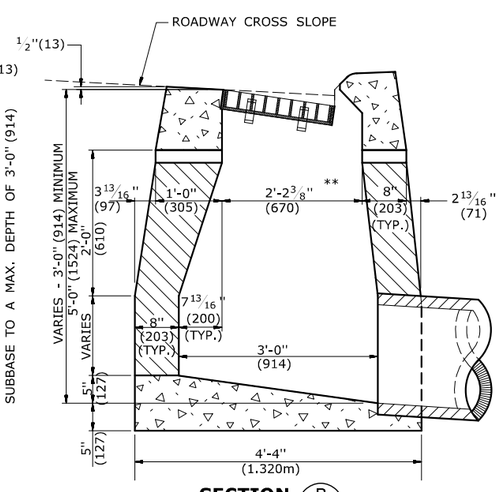

SECTION B

TYPE "C" DROP INLET

GENERAL NOTES:

1. FOR DETAILS OF FRAME AND GRATE SEE STANDARD SHEET HW-507_08.
2. USE APPROPRIATE CONCRETE TOP FOR CURBING SHOWN ON PLANS. IF CURBING IS NOT SPECIFIED ON THE PLANS, IT SHALL BE CONSTRUCTED AS DIRECTED BY THE ENGINEER.
3. ALL FACES OF STRUCTURES IN CONTACT WITH CONCRETE PAVEMENT SHALL BE COVERED WITH A LAYER OF TAR PAPER OR APPROVED EQUAL. THE COST FOR THE PAPER SHALL BE INCLUDED IN THE BID PRICE FOR THE TYPE OF CATCH BASIN INSTALLED.
4. USE 6'-0" (1.830m) ON UPGRADE SIDE OF CONTINUOUS GRADE AND 1'-0" (305mm) ON DOWNGRADE SIDE OF CONTINUOUS GRADE OR AS DIRECTED.
5. IF MASONRY UNITS ARE REQUIRED, THE BASIN SHALL BE CONSTRUCTED IN CONFORMANCE WITH THE OVER ALL DIMENSIONS SHOWN HERE AND SECTION 5.07 OF THE STATE OF CONNECTICUT'S STANDARD SPECIFICATIONS. CORBELLING SHALL BE PERMITTED TO A MAXIMUM OF 3" (75mm.) NO PROJECTION SHALL EXTEND INSIDE THE LIMITS NOTED BY **.
6. WALL THICKNESS OF ALL CB'S OVER 10' (3.048m) DEEP SHALL BE INCREASED TO 12" (305mm) THICK. INSIDE DIMENSION SHALL REMAIN THE SAME. 12" (305mm) THICKNESS WILL START AFTER THE FIRST 10' (3.048m).
7. TO CONVEY SUBSURFACE DRAINAGE, OPENINGS SHALL BE FORMED IN THE FOUR WALLS AT OR IMMEDIATELY ABOVE THE BOTTOM OF THE PERVIOUS BACKFILL.
8. MINIMUM CONCRETE COMPRESSIVE STRENGTH OF F'c = 4000 PSI (27,580 kPa) SHALL BE OBTAINED PRIOR TO SHIPPING.
9. LATEST STATE OF CONNECTICUT'S STANDARD SPECIFICATIONS AND SUPPLEMENTALS SHALL GOVERN.
10. SPACER MAY BE CMU OR PRECAST WITH REQUIRED REINFORCING (RECOMMENDED BY THE MANUFACTURER) AS NEEDED TO PROVIDE PROPER GRADE SHOWN ON PLANS.
11. TOP OF FRAME (TF) ELEVATION SHALL BE MEASURED IN THE CENTER OF GRATE @ GUTTER LINE.

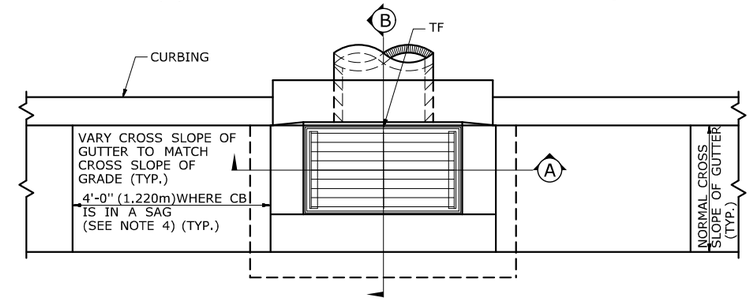

PLAN

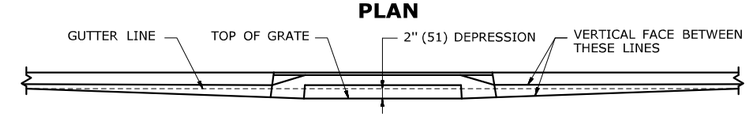

FOR CATCH BASINS IN A LINE OF 4" (102) CONCRETE PARK CURBING OR 4" (102) BITUMINOUS CONCRETE PARK CURBING

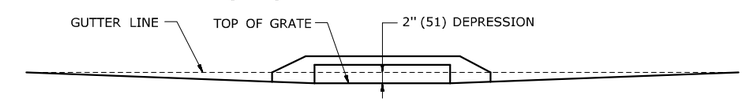

FOR CATCH BASINS WHERE NO CURBING OF ANY TYPE EXISTS OR IS PROPOSED

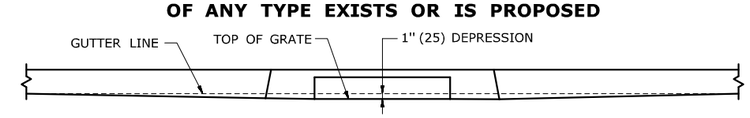

FOR CATCH BASINS IN A LINE OF 6" (152) CONCRETE CURBING OR 6" (152) STONE CURBING

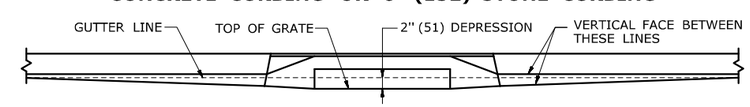

FOR CATCH BASINS IN A LINE OF 6" (152) BITUMINOUS CONCRETE LIP CURBING (MACHINE FORMED)

DETAILS OF DEPRESSED GUTTER STRIP FOR TYPE "C" CATCH BASIN

ALL METRIC DIMENSIONS ARE IN MILLIMETERS (mm) UNLESS OTHERWISE NOTED.

REV.	DATE	REVISION DESCRIPTION
4	7/13	ADD NOTE 11 -
3	9/30/11	ADD SPACERS AND NOTE 10. -
2	9/15/11	MODIFIED DETAILS TO BE CONSISTANT WITH PRECAST -
1	7/28/11	REMOVE MIN. DROP NOTE -
-	-	- -
-	-	- -

THE INFORMATION, INCLUDING ESTIMATED QUANTITIES OF WORK, SHOWN ON THESE SHEETS IS BASED ON LIMITED INVESTIGATIONS BY THE STATE AND IS IN NO WAY WARRANTED TO INDICATE THE CONDITIONS OF ACTUAL QUANTITIES OF WORK WHICH WILL BE REQUIRED.

Plotted Date: 6/10/2013

NOT TO SCALE

STATE OF CONNECTICUT
DEPARTMENT OF TRANSPORTATION

Filename: CTDOT_HIGHWAY_STD2013.dgn Model: 6-HW-507_01

SUBMITTED BY: NAME/DATE/TIME: Digitally signed by Leo L. Fontaine Date: 2013.07.24 11:02:42-04'00'

APPROVED BY: NAME/DATE/TIME: James H. Norman 2013.07.24 14:39:55-04'00'

CTDOT STANDARD SHEET

OFFICE OF ENGINEERING

STANDARD SHEET TITLE: TYPE "C", "C-L" & DROP INLET CATCH BASIN

STANDARD SHEET NO.: HW-507_01

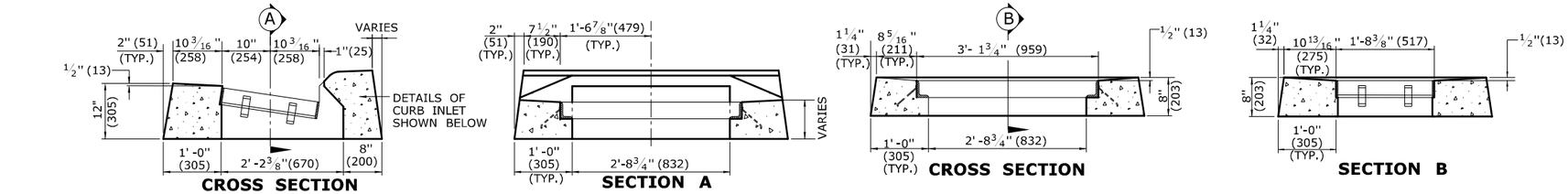

CROSS SECTION

SECTION A

TYPE "C" CATCH BASIN TOP

CROSS SECTION

SECTION B

TYPE "C-L" CATCH BASIN TOP

GENERAL NOTES:

1. FOR DETAILS OF FRAME AND GRATE SEE STANDARD SHEET HW-507_08.
2. ALL STEEL, EXCEPT REINFORCING BARS, SHALL BE GALVANIZED IN CONFORMANCE WITH SECTION M06.03 OF CONNECTICUT'S STANDARD SPECIFICATIONS.
3. ALL BARS SHALL HAVE A MINIMUM 2" (51) COVER.

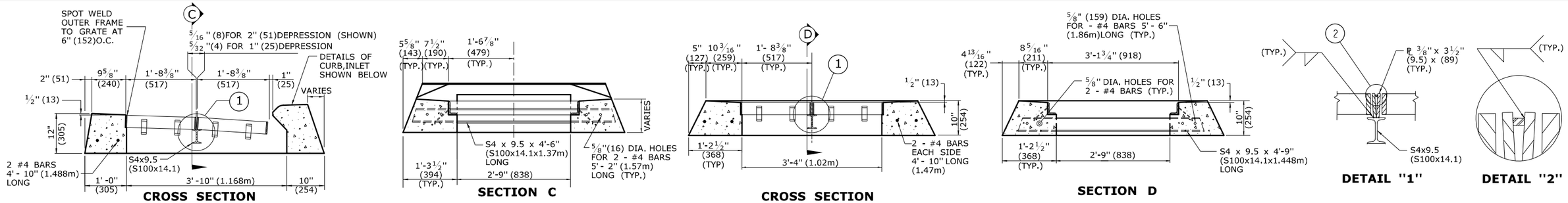

CROSS SECTION

SECTION C

TYPE "C" CATCH BASIN DOUBLE GRATE - TYPE I TOP

CROSS SECTION

SECTION D

DETAIL "1"

DETAIL "2"

TYPE "C-L" CATCH BASIN DOUBLE GRATE - TYPE I TOP

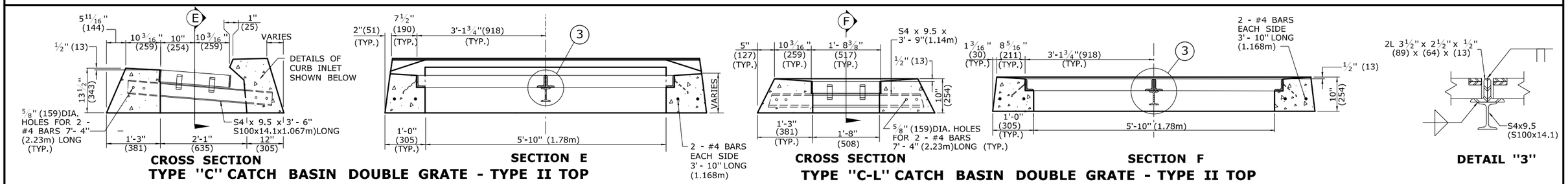

CROSS SECTION

SECTION E

TYPE "C" CATCH BASIN DOUBLE GRATE - TYPE II TOP

CROSS SECTION

SECTION F

DETAIL "3"

TYPE "C-L" CATCH BASIN DOUBLE GRATE - TYPE II TOP

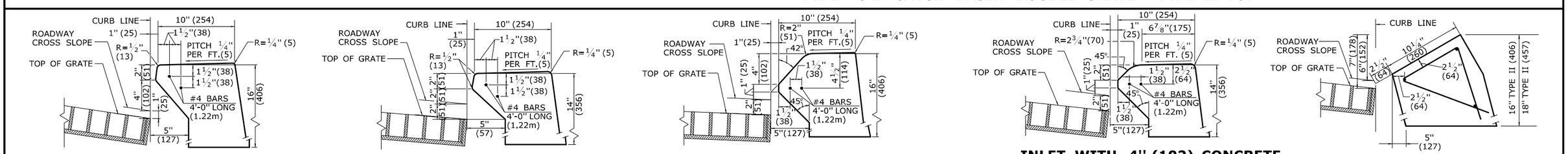

INLET WITH 6" (152) CONCRETE OR STONE CURBING FOR TYPE "C" CB

INLET WITH NO CURBING (PLAIN TYPE) FOR TYPE "C" CB

INLET WITH 6" (152) BITUMINOUS CONCRETE LIP CURBING FOR TYPE "C" CB

INLET WITH 4" (102) CONCRETE PARK CURBING FOR TYPE "C" CB

INLET WITH GRANITE SLOPE CURB FOR TYPE "C" CB

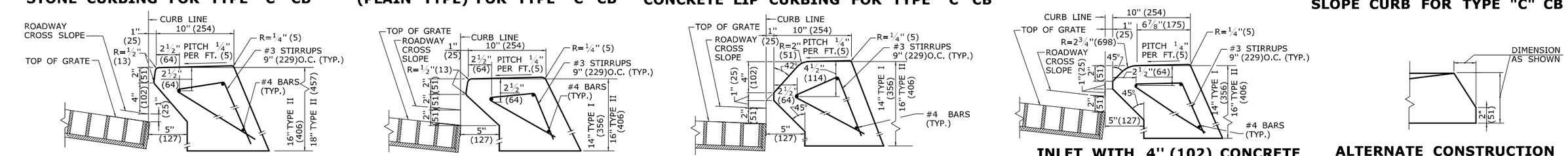

INLET WITH 6" (152) CONCRETE OR STONE CURBING FOR TYPE "C" CB DOUBLE GRATE TYPE I & II

INLET WITH NO CURBING (PLAIN TYPE) FOR TYPE "C" CB DOUBLE GRATE TYPE I & II

INLET WITH 6" (152) BITUMINIOUS CONCRETE LIP CURBING FOR TYPE "C" CB DOUBLE GRATE TYPE I & II

INLET WITH 4" (102) CONCRETE PARK CURBING FOR TYPE "C" CB DOUBLE GRATE TYPE I & II

ALTERNATE CONSTRUCTION OF TYPE II TOP

ALL METRIC DIMENSIONS ARE IN MILLIMETERS (mm) UNLESS OTHERWISE NOTED

REV.	DATE	REVISION DESCRIPTION
-	-	-
-	-	-
-	-	-
-	-	-
2	7/28/11	REMOVE MIN. DROP NOTE
1	6/01/10	REVISE CALL-OUT

THE INFORMATION, INCLUDING ESTIMATED QUANTITIES OF WORK, SHOWN ON THESE SHEETS IS BASED ON LIMITED INVESTIGATIONS BY THE STATE AND IS IN NO WAY WARRANTED TO INDICATE THE CONDITIONS OF ACTUAL QUANTITIES OF WORK WHICH WILL BE REQUIRED.

Plotted Date: 11/10/2011

NOT TO SCALE

STATE OF CONNECTICUT
DEPARTMENT OF TRANSPORTATION

Filename: CTDOT_HWY_STD_Nov2011.dgn Model: 12-HW-507_07

SUBMITTED BY: NAME/DATE/TIME: Leo Fontaine 2011.11.10 10:04:01 -05'00'

APPROVED BY: NAME/DATE/TIME: James H. Norman 2011.11.10 10:19:36 -05'00'

CTDOT STANDARD SHEET

OFFICE OF ENGINEERING

STANDARD SHEET TITLE:

TYPE "C" & "C-L" CATCH BASIN TOPS AND CURBS

STANDARD SHEET NO.: HW-507_07

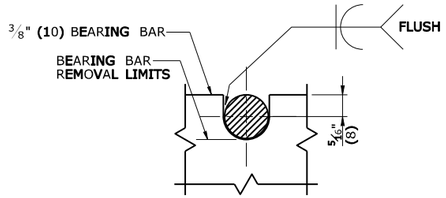

NOTE:
5/8" (16) DIA. ROUND BAR SHALL CONTACT BEARING BAR AT BOTTOM AND BE FLUSH AT TOP.

ROUND BAR ATTACHMENT
CATCH BASIN GRATE TYPE A

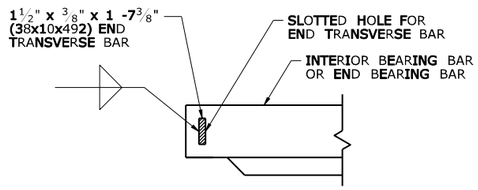

END TRANSVERSE BAR ATTACHMENT
CATCH BASIN GRATE TYPE A & B

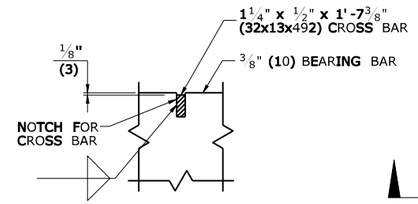

CROSS BAR ATTACHMENT
CATCH BASIN GRATE TYPE B

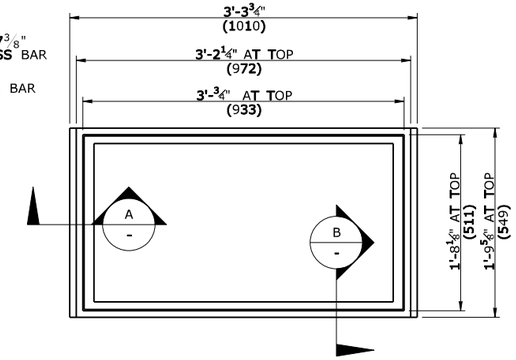

PLAN

GENERAL NOTES:

1. STEEL OR CAST IRON SHALL BE USED FOR FRAMES. STEEL SHALL BE USED FOR TYPE "A" & "B" GRATES.
2. TYPE "A" GRATES SHALL BE USED ON ALL ROADWAYS WHERE BICYCLE TRAFFIC IS ALLOWED OR AS DIRECTED BY THE ENGINEER.
3. TYPE "B" GRATES SHALL BE USED ON ALL LIMITED ACCESS HIGHWAYS, RAMPS AND WHERE BICYCLE TRAFFIC IS NOT ALLOWED OR AS DIRECTED BY THE ENGINEER.
4. STEEL FRAMES AND GRATES SHALL BE GALVANIZED IN ACCORDANCE WITH ARTICLE M.06.03.
5. DO NOT GALVANIZE CAST IRON FRAMES.
6. DIMENSIONAL TOLERANCES SHALL BE ±1/16".(1.6)
7. ALL STEEL BARS SHALL BE WELDED AT ALL INTERSECTIONS.
8. ALL WELDING SHALL CONFORM TO THE REQUIREMENTS OF AWS STRUCTURAL WELDING CODE, D1.1.

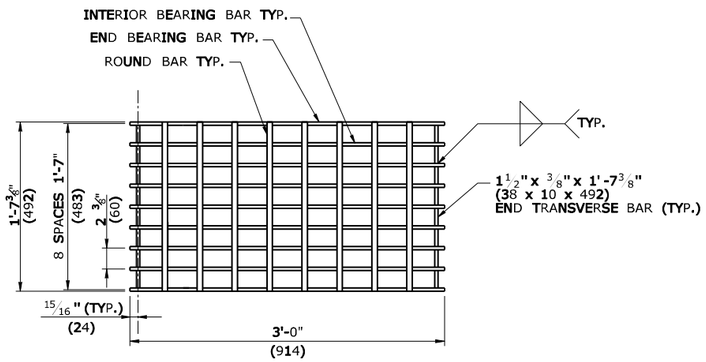

PLAN

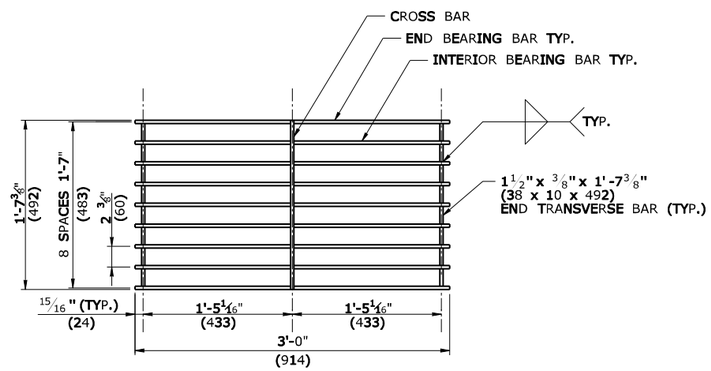

PLAN

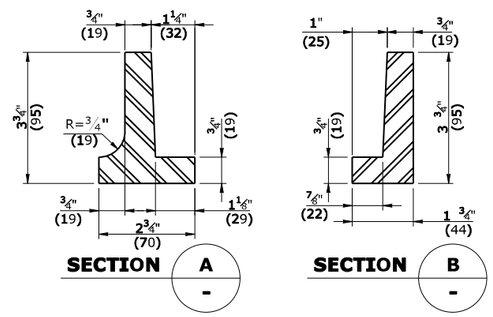

SECTION A
SECTION B

CAST IRON FRAME ALTERNATE

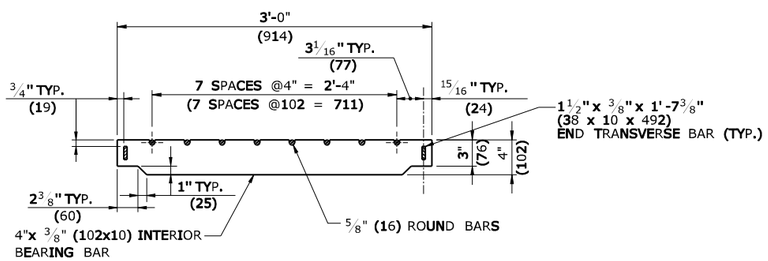

ELEVATION- INTERIOR BEARING BAR

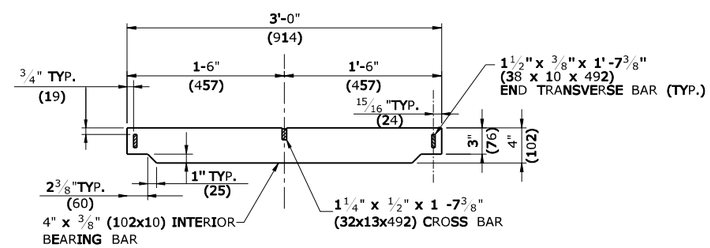

ELEVATION- INTERIOR BEARING BAR

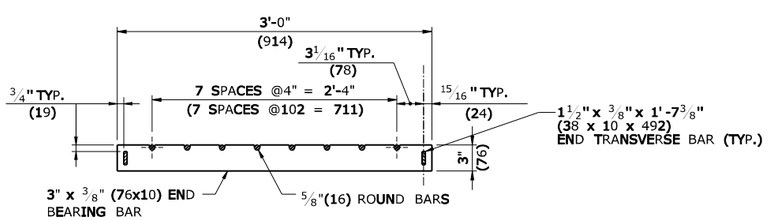

ELEVATION- END BEARING BAR
CATCH BASIN GRATE TYPE A

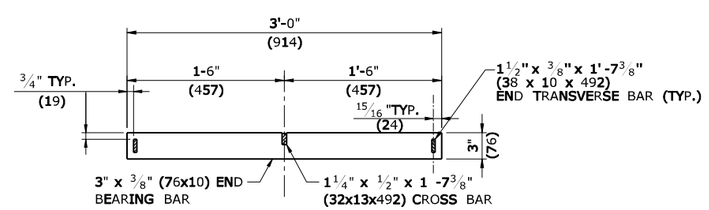

ELEVATION- END BEARING BAR
CATCH BASIN GRATE TYPE B

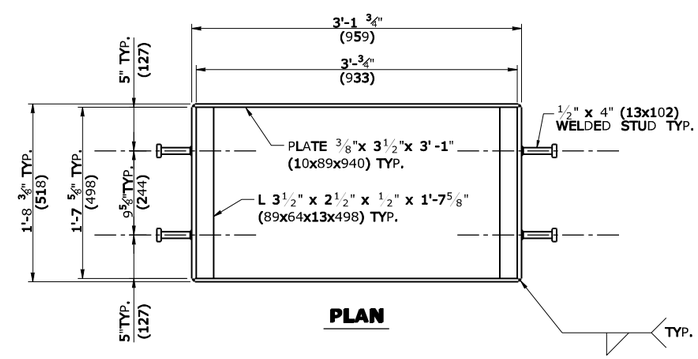

PLAN

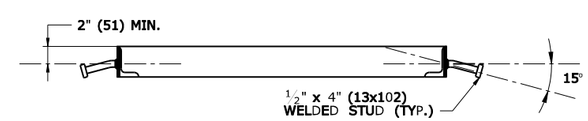

WELDED STUD ANCHOR DETAILS
STEEL FRAME

ALL METRIC DIMENSIONS ARE IN MILLIMETERS (mm) UNLESS OTHERWISE NOTED

REV.	DATE	REVISION DESCRIPTION
-	-	-
-	-	-
-	-	-
-	-	-
-	-	-
-	-	-

THE INFORMATION, INCLUDING ESTIMATED QUANTITIES OF WORK, SHOWN ON THESE SHEETS IS BASED ON LIMITED INVESTIGATIONS BY THE STATE AND IS IN NO WAY WARRANTED TO INDICATE THE CONDITIONS OF ACTUAL QUANTITIES OF WORK WHICH WILL BE REQUIRED.

Plotted Date: 9/11/2009

NOT TO SCALE

STATE OF CONNECTICUT
DEPARTMENT OF TRANSPORTATION

Filename: CTDOT_HIGHWAY_STD.dgn Model: HW-507_08

SUBMITTED BY:	NAME/DATE/TIME:
	Timothy M. Wilson 2009.09.16 11:16:32 -04'00'
APPROVED BY:	NAME/DATE/TIME:
	James H. Norman 2009.09.18 14:22:33 -04'00'

CTDOT
STANDARD SHEET

OFFICE OF ENGINEERING

STANDARD SHEET TITLE:
CATCH BASIN FRAMES AND GRATES

STANDARD SHEET NO.:
HW-507_08

GENERAL NOTES:

1. CHANNELS MAY BE SHAPED IN CONCRETE BASE OF MANHOLE OR FORMED USING BRICK OR MASONRY.
2. A FRAME DIAMETER OF 3'-3" (991) WITH 4" (102) FLANGE MUST BE USED WHEN THE TOP DIAMETER OF THE PRECAST CONE IS LESS THAN 3'-6" (1067). ALL OTHER FRAME DIMENSIONS SHALL REMAIN THE SAME.
3. COVER:

	CAST IRON	STEEL
MIN. COVER WEIGHT	134LB.(61kg)	134LB.(61kg)

4. ALL DIMENSIONS SUBJECT TO MANUFACTURING TOLERANCES.

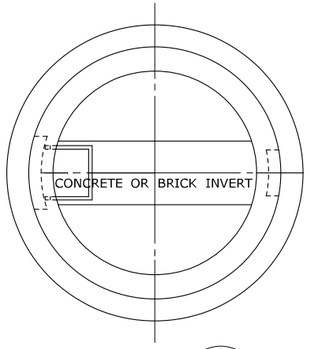

SECTION A

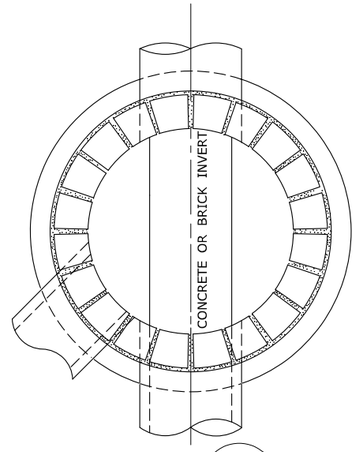

SECTION B

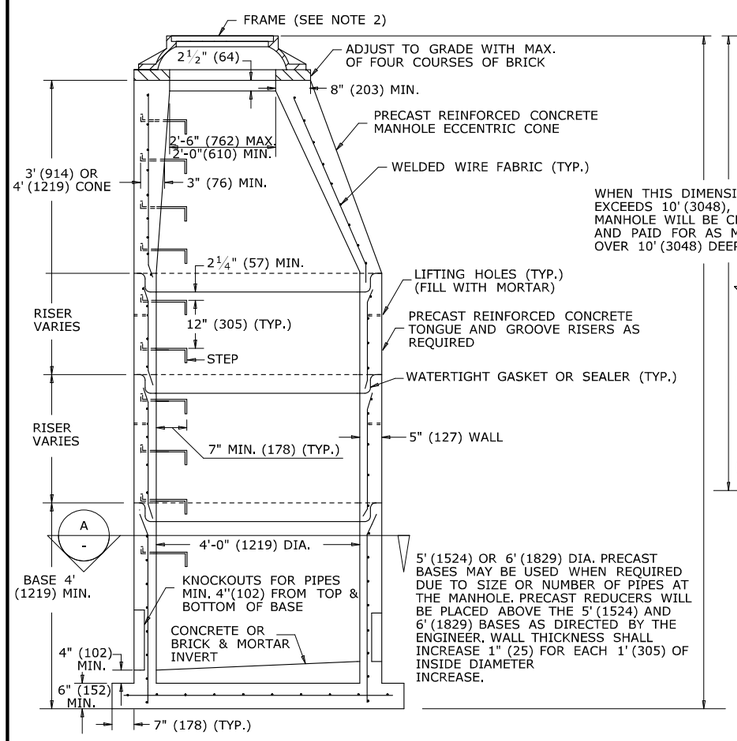

ELEVATION

MANHOLE

REINFORCED PRECAST CONCRETE UNIT

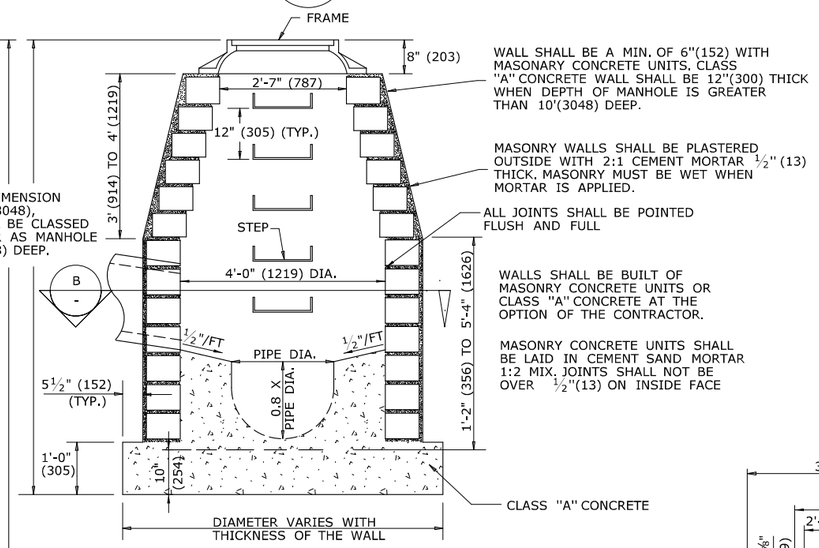

ELEVATION

MANHOLE

MASONARY CONCRETE UNIT OR CLASS "A" CONCRETE

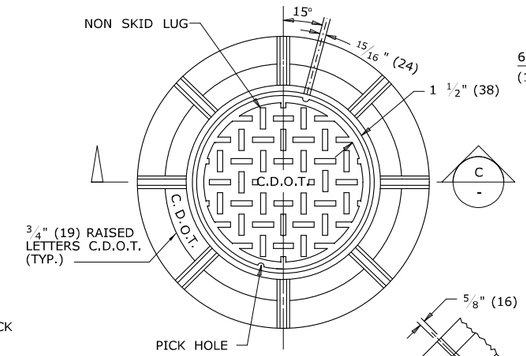

PLAN

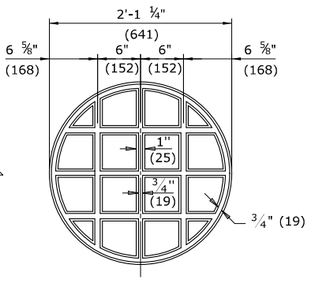

UNDERSIDE OF COVER DETAIL

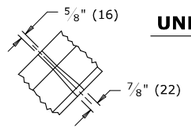

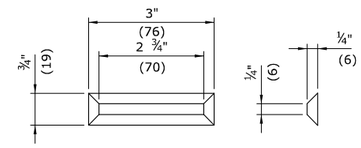

NON SKID LUG DETAIL

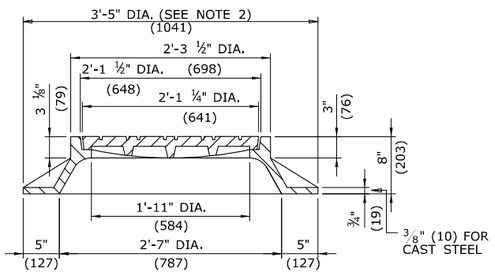

SECTION C

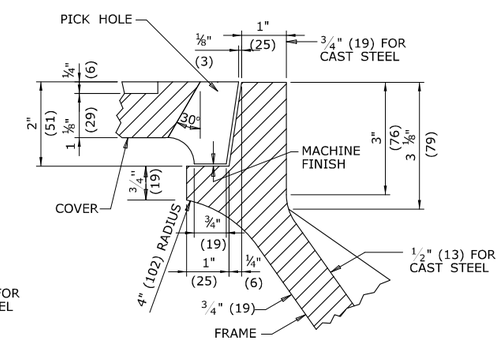

DETAIL OF SEAT

FRAME AND COVER DETAILS

ALL METRIC DIMENSIONS ARE IN MILLIMETERS (mm) UNLESS OTHERWISE NOTED

REV.	DATE	REVISION DESCRIPTION
1	6/11	REVISE STEP WIDTH PER OSHA
2	7/13	REVISE COVER FRAME WEIGHT
-	-	-
-	-	-
-	-	-
-	-	-

THE INFORMATION, INCLUDING ESTIMATED QUANTITIES OF WORK, SHOWN ON THESE SHEETS IS BASED ON LIMITED INVESTIGATIONS BY THE STATE AND IS IN NO WAY WARRANTED TO INDICATE THE CONDITIONS OF ACTUAL QUANTITIES OF WORK WHICH WILL BE REQUIRED.

Plotted Date: 6/13/2013

NOT TO SCALE

STATE OF CONNECTICUT
DEPARTMENT OF TRANSPORTATION

Filename: CTDOT_HIGHWAY_STD2013.dgn Model: 15-HW-507_10

SUBMITTED BY: NAME/DATE/TIME: Digitally signed by Leo L. Fontaine Date: 2013.07.24 11:01:54-04'00'

APPROVED BY: NAME/DATE/TIME: James H. Norman 2013.07.24 14:43:21-04'00'

CTDOT STANDARD SHEET

OFFICE OF ENGINEERING

STANDARD SHEET TITLE: **MANHOLE - FRAME & COVER**

STANDARD SHEET NO.: **HW-507_10**

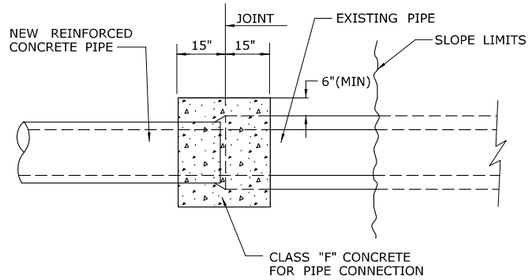

PLAN

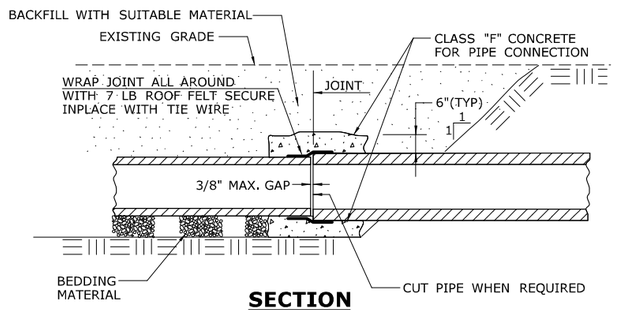

SECTION
CONCRETE PIPE CONNECTION

NOTES:

1. "CONCRETE PIPE CONNECTION" IS INTENDED FOR USE WHERE A REINFORCED CONCRETE PIPE REPAIR OR MODIFICATION IS NEEDED SOMEWHERE WITHIN A PIPE RUN WHERE A BELL/SPIGOT JOINT CANNOT BE ACHIEVED.
2. MAINTAIN INTERIOR ALIGNMENT OF PIPE AT JOINTS UNTIL CONCRETE IS PROPERLY CURED.
3. BACKFILL OF PIPE REPAIR WITH SUITABLE MATERIAL MAY NOT TAKE PLACE UNTIL CONCRETE IS PROPERLY CURED.
4. CONTRACTOR SHALL MAINTAIN LINE AND GRADE OF PIPE REPAIR OR MODIFICATION BY METHODS APPROVED BY THE ENGINEER.
5. HOLES OR GAPS AT JOINT LARGER THAN 3/8" SHALL BE FILLED OR WRAPED TO PREVENT CONCRETE FROM ENTERING PIPE.
6. TRENCH EXCAVATION SHALL BE TO THE MAXIMUM EXTENT NEEDED TO PERFORM WORK.

GENERAL NOTES:

1. ROCK REMOVED BEYOND THE MAXIMUM PAY LIMIT SHOWN SHALL BE REPLACED WITH CEMENT RUBBLE MASONRY AND GRANULAR FILL.
2. FILL, AS REQUIRED TO CLOSE THE OPENING AS SHOWN ON THE PLANS, WILL BE AT THE CONTRACTORS EXPENSE. HOWEVER, THE PAY LIMIT LINES MAY BE MODIFIED TO COINCIDE WITH NATURAL FAULTS OR FISSURES OF ROCK AS THE ENGINEER MAY DETERMINE.
3. COATED CORRAGATED METAL PIPE (C.C.M.P.)

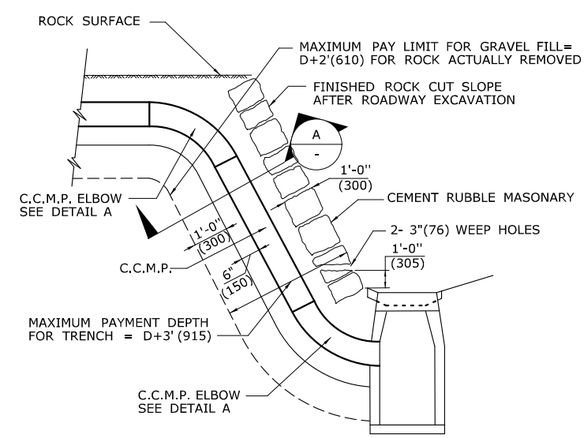

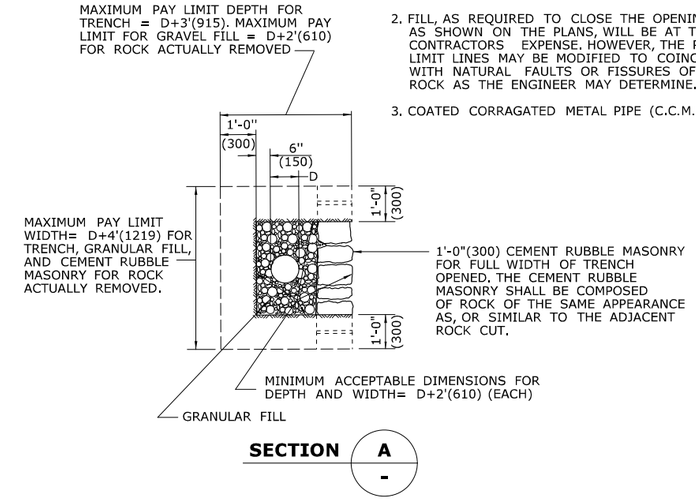

SECTION A - A

TYPICAL INSTALLATION OF C.C.M.P. IN ROCK SLOPE

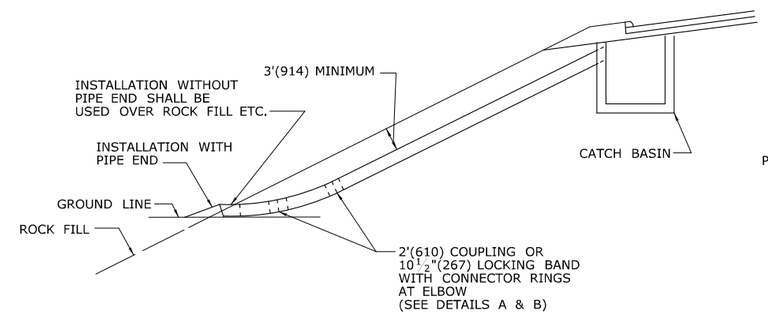

TYPICAL INSTALLATION OF C.C.M.P ELBOW IN FILL SLOPE

TABLE C
CONNECTOR RINGS

PIPE DIAMETER	LENGTH OF RING
12" (300)	52" (1321)
15" (381)	61" (1549)
18" (457)	71" (1803)
21" (533)	80" (2032)
24" (610)	90" (2286)
30" (762)	108" (2743)
36" (915)	128" (3251)
42" (1066)	147" (3734)
48" (1219)	166" (4216)

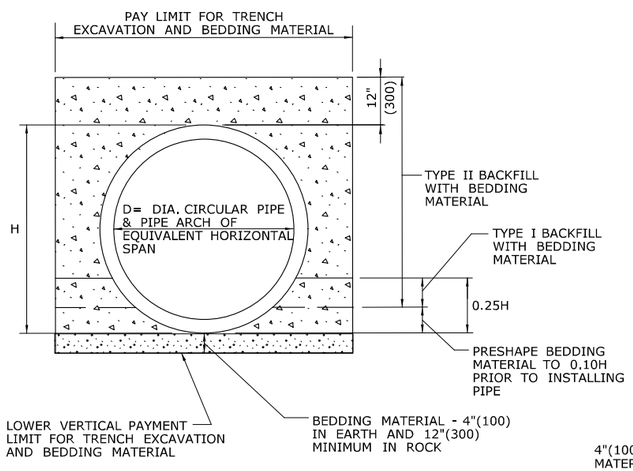

PIPE TRENCH DETAIL
WHERE GRANULAR FILL IS NOT USED

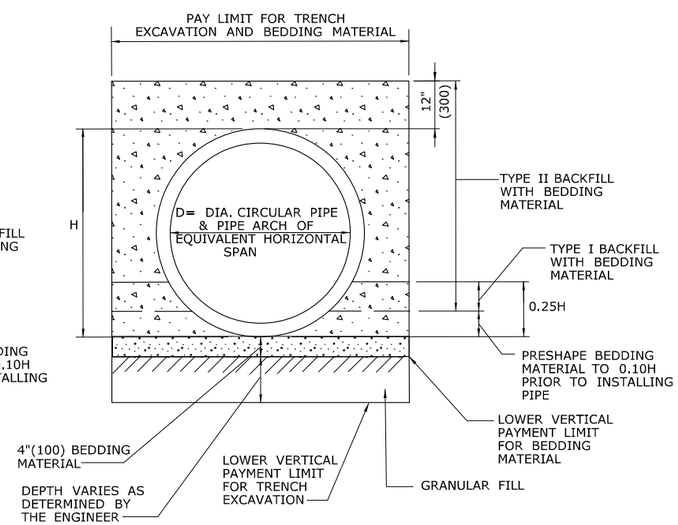

PIPE TRENCH DETAIL
WHERE GRANULAR FILL IS USED AS BEDDING

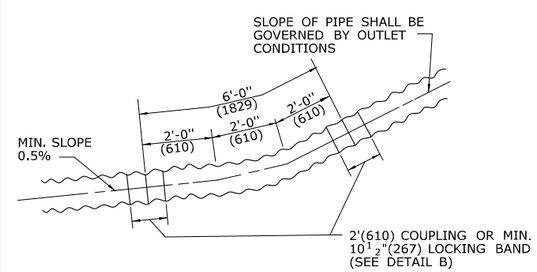

DETAIL A
C.C.M.P. ELBOW AND COUPLING

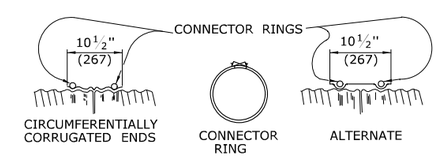

RODS: 7/16"(11) DIAMETER ELECTRO-GALVANIZED WITH 6"(152) LENGTH OF 1/2"(13) ROLLED THREADS EACH END, FURNISHED CURVED, TO FIT PIPE. SEE TABLE C

LUGS: DOUBLE TAKE UP, CAST IRON, ELECTRO-GALVINIZED.

NOTE: THE COUPLER FASTENING DEVICE SHALL NOT INTERFERE WITH INSTALLATION OF CONNECTOR RINGS.

DETAIL B
ELBOW DIMENSIONS

ALL METRIC DIMENSIONS ARE IN MILLIMETERS (mm) UNLESS OTHERWISE NOTED

REV.	DATE	REVISION DESCRIPTION
-	-	-
-	-	-
-	-	-
3	7/13	ADD CONCRETE PIPE CONNECTION DETAIL
2	6/01/10	REVISE TITLE TO SAY TRENCH DETAIL
1	6/01/10	REMOVE GRAVEL, REPLACE W/ GRANULAR

THE INFORMATION, INCLUDING ESTIMATED QUANTITIES OF WORK, SHOWN ON THESE SHEETS IS BASED ON LIMITED INVESTIGATIONS BY THE STATE AND IS IN NO WAY WARRANTED TO INDICATE THE CONDITIONS OF ACTUAL QUANTITIES OF WORK WHICH WILL BE REQUIRED.

Plotted Date: 6/13/2013

NOT TO SCALE

STATE OF CONNECTICUT
DEPARTMENT OF TRANSPORTATION

Filename: CTDOT_HIGHWAY_STD2013.dgn Model: 17-HW-651_01

SUBMITTED BY: NAME/DATE/TIME: Digitally signed by Leo L. Fontaine Date: 2013.07.24 11:01:39-04'00'

APPROVED BY: NAME/DATE/TIME: James H. Norman 2013.07.24 14:44:01-04'00'

CTDOT STANDARD SHEET

OFFICE OF ENGINEERING

STANDARD SHEET TITLE: C.C.M.PIPE INSTALLATIONS IN FILL & ROCK SLOPES & PIPE TRENCH DETAIL

STANDARD SHEET NO.: HW-651_01

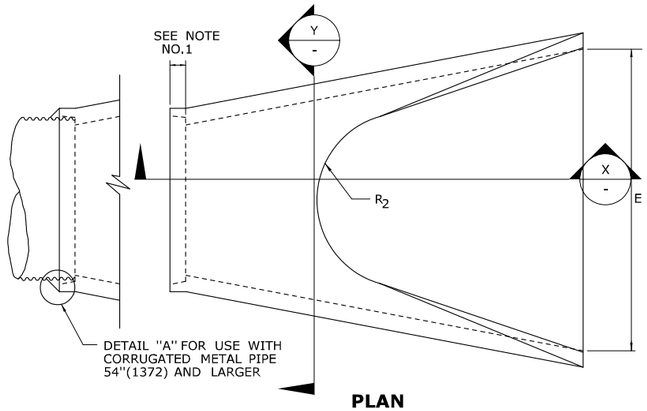

PLAN

DETAIL "A"

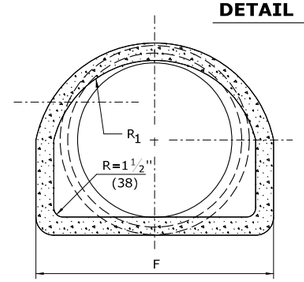

SECTION Y / -

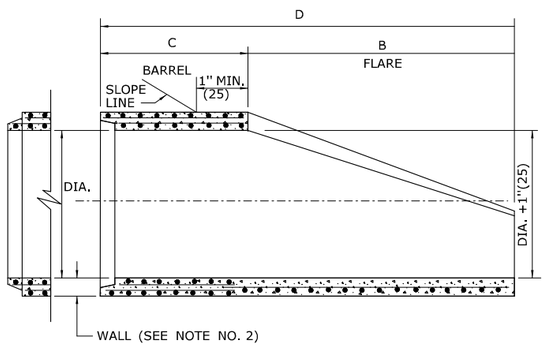

SECTION X / -

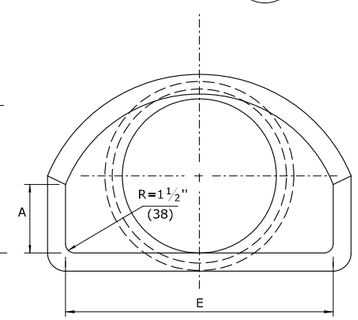

END VIEW

REINFORCED CONCRETE PIPE END

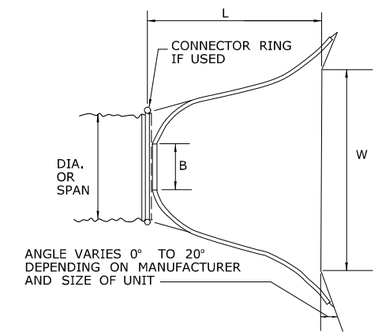

PLAN

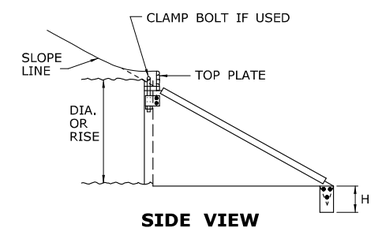

SIDE VIEW

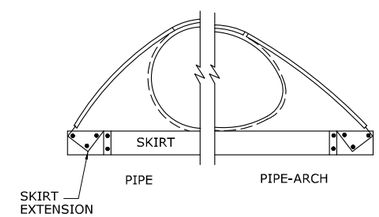

END VIEW

METAL PIPE END

GENERAL NOTES:

1. JOINTS SHALL BE TONGUE AND GROOVE OR BELL AND SPIGOT AS REQUIRED TO CONFORM TO PIPE INSTALLED.
2. WALL THICKNESS SHALL CONFORM TO PIPE THICKNESS.

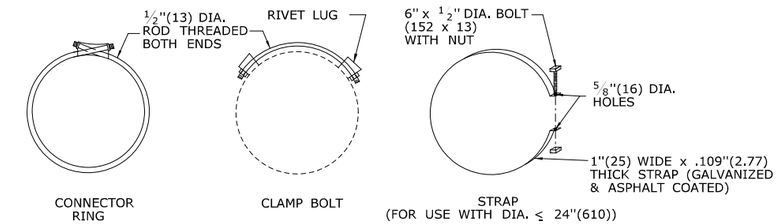

ATTACHMETNT SYSTEMS

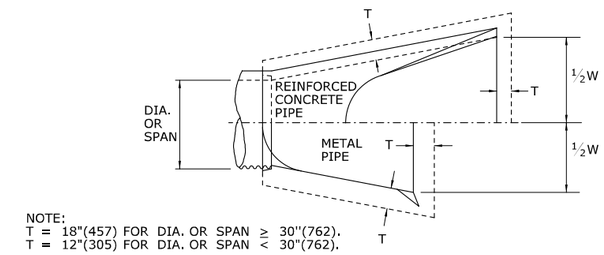

NOTE:
T = 18"(457) FOR DIA. OR SPAN ≥ 30"(762).
T = 12"(305) FOR DIA. OR SPAN < 30"(762).

HORIZONTAL PAY LIMITS FOR TRENCH EXCAVATION-PIPE ENDS

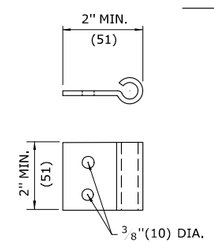

RIVET LUG

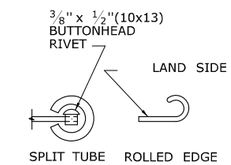

EDGE REINFORCEMENT

DIMENSIONS FOR REINFORCED CONCRETE PIPE END									FLARE REINFORCEMENT ONE LAYER ONLY IN CENTER OF WALL	
DIA.	A	B	C	D	E	F	R_1	R_2	MIN. AREA OF LONGITUDINAL STEEL SQ. IN. PER FT.	MIN. AREA OF TRANSVERSE STEEL SQ. IN. PER FT.
12"(305)	4"(102)	2'-0"(610)	4'-0 3/8"(1241)	6'-0 3/8"(1851)	2'-0"(610)	1'-7 15/16"(506)	10 1/4"(260)	9"(229)	0.048	0.048
15"(381)	6"(152)	2'-3"(686)	3'-10"(1168)	6'-1"(1854)	2'-6"(762)	2'-0 5/16"(618)	1'-0 1/2"(318)	11"(279)	0.054	0.054
18"(457)	9"(229)	2'-3"(686)	3'-10"(1168)	6'-1"(1854)	3'-0"(914)	2'-5"(737)	1'-3 1/2"(394)	1'-0"(305)	0.060	0.060
21"(533)	9"(229)	2'-11"(889)	3'-2"(965)	6'-1"(1854)	3'-6"(1067)	2'-7 1/2"(800)	1'-4"(406)	1'-1"(330)	0.066	0.066
24"(610)	9 1/2"(241)	3'-7 1/2"(1105)	2'-6"(762)	6'-1 1/2"(1867)	4'-0"(1219)	2'-9 3/16"(843)	1'-4 13/16"(427)	1'-2"(356)	0.072	0.072
30"(762)	1'-0"(305)	4'-6"(1371)	1'-7 3/4"(502)	6'-1 3/4"(1873)	5'-0"(1524)	3'-1"(940)	1'-6 1/2"(470)	1'-3"(381)	0.084	0.084
36"(914)	1'-3"(381)	5'-3"(1600)	2'-10 3/4"(883)	8'-1 3/4"(2483)	6'-0"(1829)	3'-11 13/16"(1214)	2'-0 5/16"(618)	1'-8"(508)	0.096	0.096
42"(1067)	1'-9"(534)	5'-3"(1600)	2'-11"(889)	8'-2"(2489)	6'-6"(1981)	4'-5 7/8"(1368)	2'-3 1/2"(699)	1'-10"(559)	0.108	0.108
48"(1219)	2'-0"(610)	6'-0"(1829)	2'-2"(660)	8'-2"(2489)	7'-0"(2134)	4'-8 1/2"(1435)	2'-4 1/2"(724)	1'-10"(559)	0.120	0.120
54"(1372)	2'-3"(686)	5'-5"(1651)	2'-11"(889)	8'-4"(2540)	7'-6"(2286)	5'-5 1/2"(1664)	2'-9 1/8"(841)	2'-0"(610)	0.132	0.132
60"(1524)	2'-9"(838)	5'-0"(1524)	3'-3"(991)	8'-3"(2515)	8'-0"(2438)	6'-0 1/2"(1842)	3'-0 11/16"(932)	2'-0"(610)	0.144	0.144

PIPE DIA.	DIMENSIONS FOR METAL PIPE END				THICKNESS INS.(mm)
	B (MAX.)	H±1" (±25)	L±1 1/2" (±35)	W±2" (±50)	
12"(305)	6"(152)	6"(152)	21"(533)	24"(610)	.064(1.63)
15"(381)	8"(203)	6"(152)	26"(660)	30"(762)	.064(1.63)
18"(457)	10"(254)	6"(152)	31"(787)	36"(914)	.064(1.63)
21"(533)	12"(305)	6"(152)	36"(914)	42"(1067)	.064(1.63)
24"(610)	13"(330)	6"(152)	41"(1041)	48"(1219)	.064(1.63)
30"(762)	16"(406)	8"(203)	51"(1295)	60"(1524)	.079(2.01)
36"(914)	19"(483)	9"(229)	60"(1524)	72"(1829)	.079(2.01)
42"(1067)	22"(559)	11"(279)	69"(1753)	84"(2134)	.109(2.77)
48"(1219)	27"(686)	12"(305)	78"(1981)	90"(2286)	.109(2.77)
54"(1372)	30"(762)	12"(305)	84"(2134)	102"(2591)	.109(2.77)
60"(1524)	33"(838)	12"(305)	87"(2210)	114"(2896)	.109(2.77)
66"(1676)	36"(914)	12"(305)	87"(2210)	120"(3048)	.109(2.77)
72"(1829)	39"(991)	12"(305)	87"(2210)	126"(3200)	.109(2.77)
78"(1981)	42"(1067)	12"(305)	87"(2210)	132"(3353)	.109(2.77)
84"(2134)	45"(1143)	12"(305)	87"(2210)	138"(3450)	.109(2.77)

PIPE ARCH SIZE		DIMENSIONS FOR METAL PIPE END				
SPAN	RISE	B (MAX.)	H±1" (±25)	L±1 1/2" (±35)	W±2" (±50)	THICKNESS INS.(mm)
17"(432)	13"(330)	9"(229)	6"(152)	19"(483)	30"(762)	.064(1.63)
21"(533)	15"(381)	10"(254)	6"(152)	23"(584)	36"(914)	.064(1.63)
24"(610)	18"(457)	12"(305)	6"(152)	28"(711)	42"(1067)	.064(1.63)
28"(711)	20"(508)	14"(356)	6"(152)	32"(813)	48"1219)	.064(1.63)
35"(889)	24"(610)	16"(406)	6"(152)	39"(991)	60"(1524)	.079(2.01)
42"(1067)	29"(737)	18"(457)	8"(203)	46"(1168)	75"(1905)	.079(2.01)
49"(1245)	33"(838)	21"(533)	9"(229)	53"(1346)	85"(2159)	.109(2.77)
57"(1448)	38"(965)	26"(660)	12"(305)	63"(1600)	90"(2286)	.109(2.77)
64"(1626)	43"(1092)	30"(762)	12"(305)	70"(1778)	102"(2591)	.109(2.77)
71"(1803)	47"(1194)	33"(838)	12"(305)	77"(1956)	114"(2896)	.109(2.77)

ALL METRIC DIMENSIONS ARE IN MILLIMETERS (mm) UNLESS OTHERWISE NOTED.

REV.	DATE	REVISION DESCRIPTION
1	7/13	CHANGE ALL CULVERT LABELS TO SAY PIPE
-	-	-
-	-	-
-	-	-
-	-	-
-	-	-
-	-	-

THE INFORMATION, INCLUDING ESTIMATED QUANTITIES OF WORK, SHOWN ON THESE SHEETS IS BASED ON LIMITED INVESTIGATIONS BY THE STATE AND IS IN NO WAY WARRANTED TO INDICATE THE CONDITIONS OF ACTUAL QUANTITIES OF WORK WHICH WILL BE REQUIRED.

Plotted Date: 3/28/2013

NOT TO SCALE

STATE OF CONNECTICUT
DEPARTMENT OF TRANSPORTATION

Filename: CTDOT_HIGHWAY_STD2013.dgn Model: 19-HW-652_01

SUBMITTED BY: NAME/DATE/TIME: Digitally signed by Leo L. Fontaine Date: 2013.07.24 11:01:21-04'00'

APPROVED BY: NAME/DATE/TIME: James H. Norman 2013.07.24 14:44:38-04'00'

CTDOT STANDARD SHEET

OFFICE OF ENGINEERING

STANDARD SHEET TITLE: **PIPE ENDS**

STANDARD SHEET NO.: **HW-652_01**

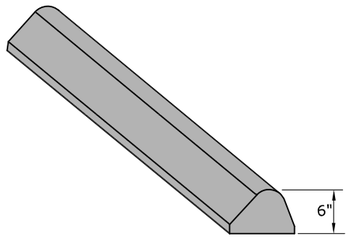

BITUMINOUS CONCRETE LIP CURBING
(6" HIGH)

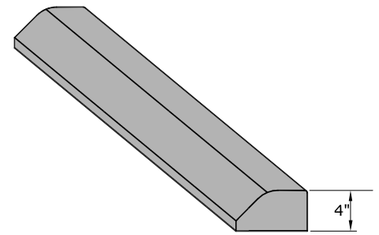

BITUMINOUS CONCRETE PARK CURBING
(4" HIGH)

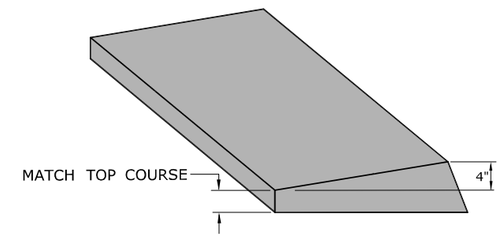

BITUMINOUS CONCRETE BERM CURBING
(4" HIGH)

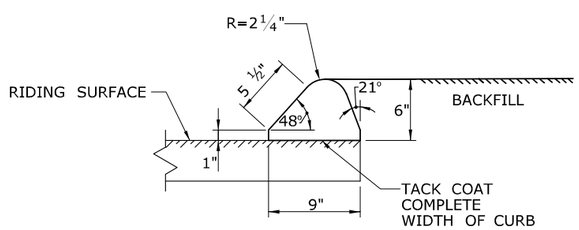

SECTION

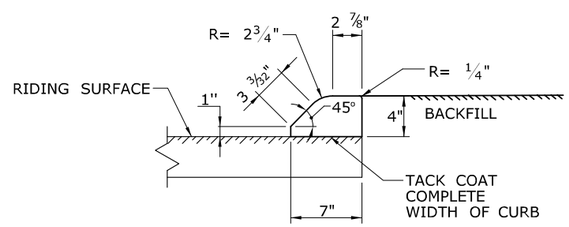

SECTION

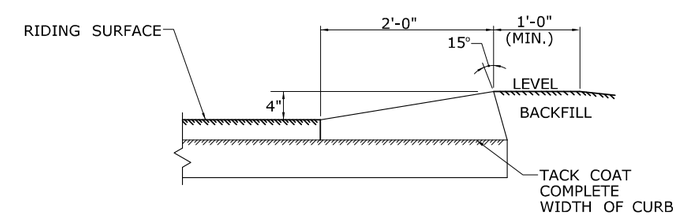

SECTION

REV.	DATE	REVISION DESCRIPTION
1	6/17	NEW SHEET

THE INFORMATION, INCLUDING ESTIMATED QUANTITIES OF WORK, SHOWN ON THESE SHEETS IS BASED ON LIMITED INVESTIGATIONS BY THE STATE AND IS IN NO WAY WARRANTED TO INDICATE THE CONDITIONS OF ACTUAL QUANTITIES OF WORK WHICH WILL BE REQUIRED.

Plotted Date: 6/6/2017

NOT TO SCALE

STATE OF CONNECTICUT
DEPARTMENT OF TRANSPORTATION

Filename: HW-815_01.dgn Model: CT_Civil_2D_Sheet

SUBMITTED BY: NAME/DATE/TIME: Leo Fontaine, P.E. 2017.06.07 07:33:51-04'00'

APPROVED BY: NAME/DATE/TIME: Gregory M. Dorosh, P.E. 2017.06.07 10:44:27-04'00'

CTDOT
STANDARD SHEET

OFFICE OF ENGINEERING

STANDARD SHEET TITLE:

BITUMINOUS CONCRETE CURBING

STANDARD SHEET NO.:

HW-815_01

GENERAL NOTES:

1. INSTALL PULL POST ASSEMBLIES AT ALL CHANGES IN VERTICAL TO HORIZONTAL OF 10 DEGREES OR MORE.
2. ALL POSTS WILL BE CAPPED.
3. WHERE ROCK IS ENCOUNTERED, IT SHALL BE DRILLED AND THE POSTS SET IN MORTAR.
4. FENCE SHALL BE PLACED WITH FABRIC FACING OUTSIDE HIGHWAY RIGHT OF WAY OR AS DIRECTED BY THE ENGINEER.
5. SEE HW-913_01b FOR CHAIN LINK FENCE HARDWARE.

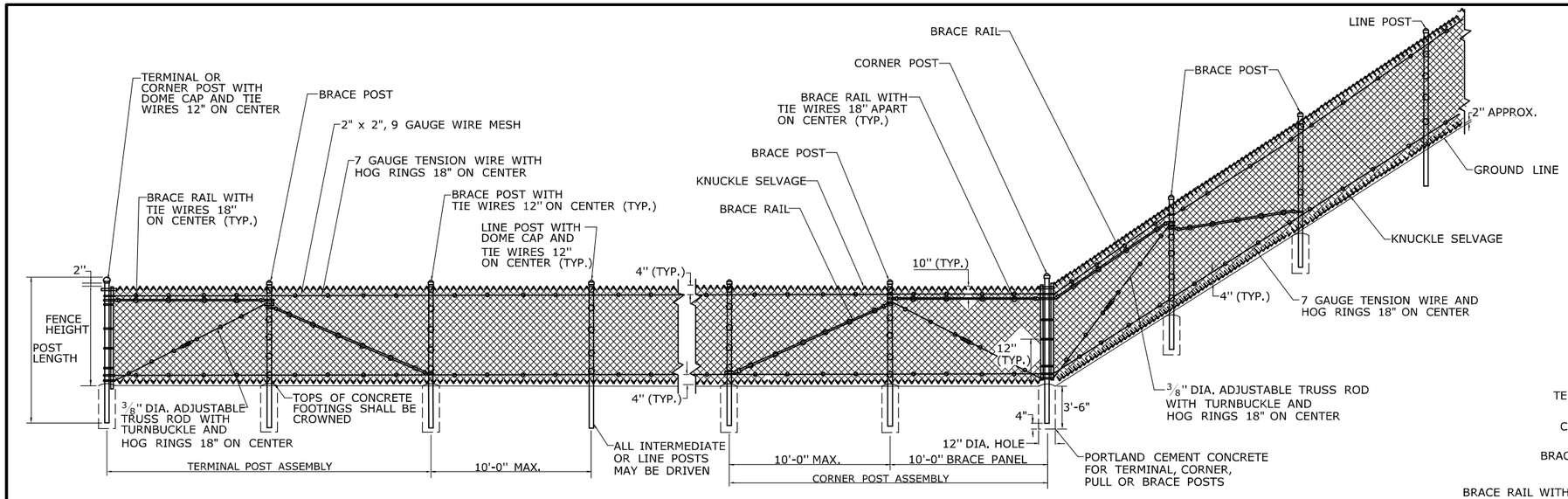

CHAIN LINK FENCE WITH TOP TENSION WIRE

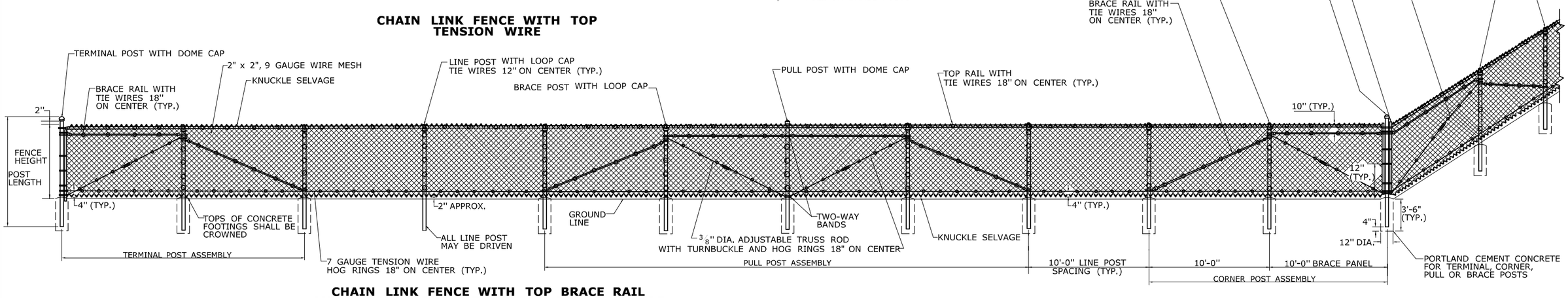

CHAIN LINK FENCE WITH TOP BRACE RAIL AND INTERMEDIATE OR BOTTOM TENSION WIRE

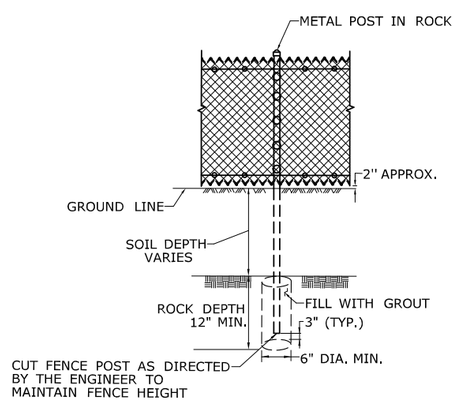

METAL POST IN ROCK

FENCE FABRIC HEIGHT	GROUP 1A ASTM F1083 SCH. 40 PIPE 50,000 PSI DIAMETER	GROUP 1C ASTM F1043 ELEC. RESISTANCE WELDED PIPE 50,000 PSI DIAMETER
LINE OR INTERMEDIATE POST		
UP TO 5'-0"	1 7/8"	1 7/8"
6'-0" TO 7'-0"	2 3/8"	2 3/8"
8'-0" TO 9'-0"	2 7/8"	2 7/8"
10'-0"	3 1/2"	3 1/2"
12'-0" OR HIGHER	4"	4"
TERMINAL, CORNER OR PULL POST		
UP TO 5'-0"	2 3/8"	2 3/8"
6'-0" TO 7'-0"	2 7/8"	2 7/8"
8'-0" TO 9'-0"	3 1/2"	3 1/2"
10'-0" OR HIGHER	4"	4"
TOP OR BRACE RAIL POSTS UP TO 6'-0"	1 5/8"	1 5/8"
POSTS HIGHER THAN 6'-0"	1 7/8"	1 7/8"

REV.	DATE	REVISION DESCRIPTION
-	-	-
-	-	-
-	-	-
-	-	-
-	-	-
-	-	-
-	-	-

THE INFORMATION, INCLUDING ESTIMATED QUANTITIES OF WORK, SHOWN ON THESE SHEETS IS BASED ON LIMITED INVESTIGATIONS BY THE STATE AND IS IN NO WAY WARRANTED TO INDICATE THE CONDITIONS OF ACTUAL QUANTITIES OF WORK WHICH WILL BE REQUIRED.

Plotted Date: 5/1/2019

NOT TO SCALE

STATE OF CONNECTICUT
DEPARTMENT OF TRANSPORTATION

Filename: CTDOT_HIGHWAY_STD_[_4-16-19_].dgn Model: 295 - HW-913_01a

SUBMITTED BY: NAME/DATE/TIME: Leo Fontaine, P.E. 2019.05.01 11:38:42-04'00'

APPROVED BY: NAME/DATE/TIME: Gregory M. Dorosh, P.E. 2019.05.06 10:54:07-04'00'

CTDOT STANDARD SHEET

OFFICE OF ENGINEERING

STANDARD SHEET TITLE: **CHAIN LINK FENCE**

STANDARD SHEET NO.: **HW-913_01a**

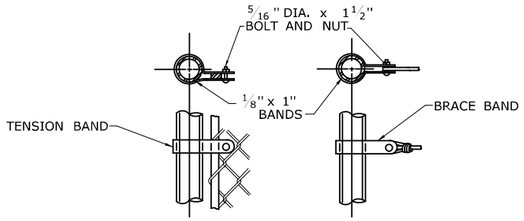

TENSION BAR TENSION WIRE

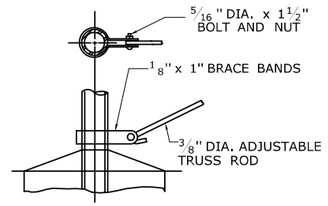

ADJUSTABLE TRUSS ROD

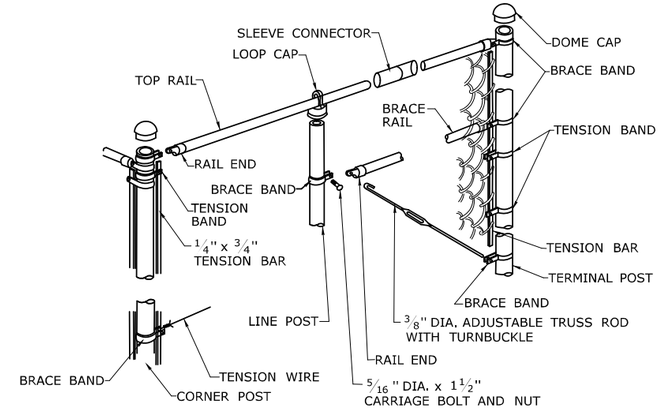

TOP RAIL / TRUSSED BRACE RAIL WITH BOTTOM TENSION WIRE

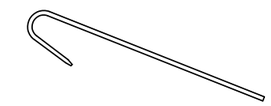

TIE WIRE

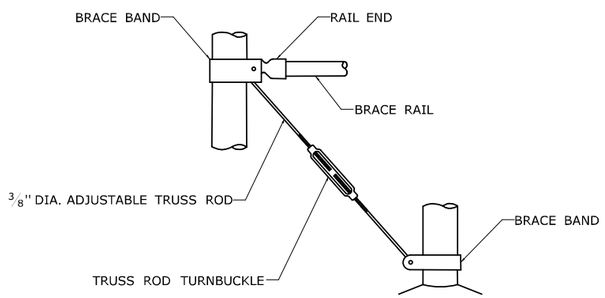

BRACE & TRUSS CONNECTIONS

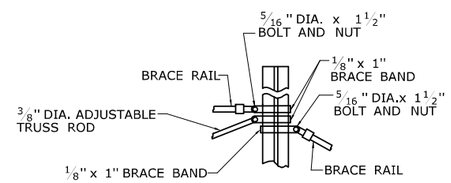

BRACE RAILS ATTACHMENT TO LINE POSTS

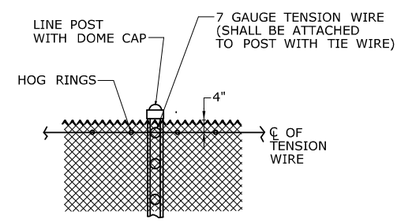

TENSION WIRE

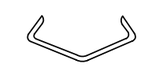

HOG RING

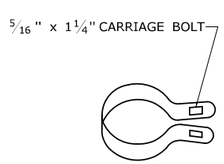

1/8" x 1" BRACE BAND

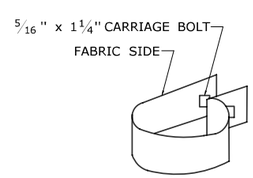

1/8" x 1" TENSION BAND

KNUCKLE SELVAGE

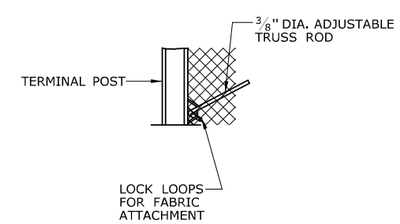

TRUSS ROD ATTACHMENT

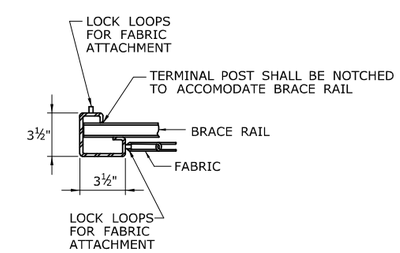

FABRIC AND BRACE RAIL ATTACHMENT

REV.	DATE	REVISION DESCRIPTION
–	–	–
–	–	–
–	–	–
–	–	–
–	–	–
–	–	–
–	–	–

THE INFORMATION, INCLUDING ESTIMATED QUANTITIES OF WORK, SHOWN ON THESE SHEETS IS BASED ON LIMITED INVESTIGATIONS BY THE STATE AND IS IN NO WAY WARRANTED TO INDICATE THE CONDITIONS OF ACTUAL QUANTITIES OF WORK WHICH WILL BE REQUIRED.

Plotted Date: 5/1/2019

NOT TO SCALE

STATE OF CONNECTICUT
DEPARTMENT OF TRANSPORTATION

Filename: CTDOT_HIGHWAY_STD_[_4-16-19_].dgn Model: 296 - HW-913_01b

SUBMITTED BY: NAME/DATE/TIME: Leo Fontaine, P.E. 2019.05.01 11:39:54-04'00'

APPROVED BY: NAME/DATE/TIME: Gregory M. Dorosh, P.E. 2019.05.06 11:00:12-04'00'

CTDOT STANDARD SHEET

OFFICE OF ENGINEERING

STANDARD SHEET TITLE:

CHAIN LINK FENCE HARDWARE

STANDARD SHEET NO.:

HW-913_01b

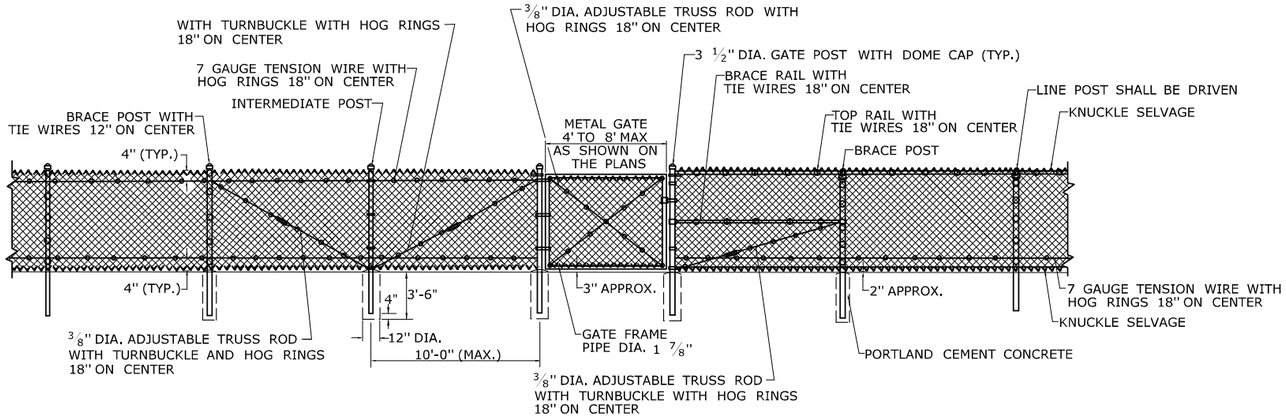

SINGLE METAL GATE

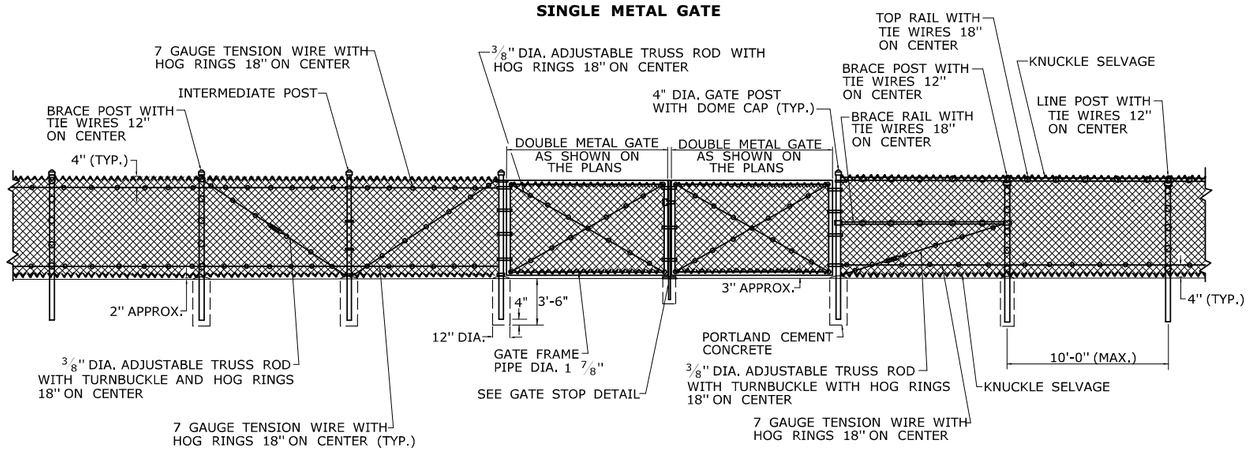

DOUBLE METAL GATE

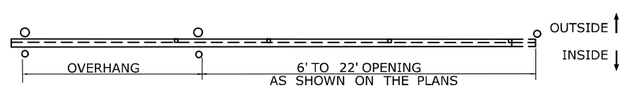

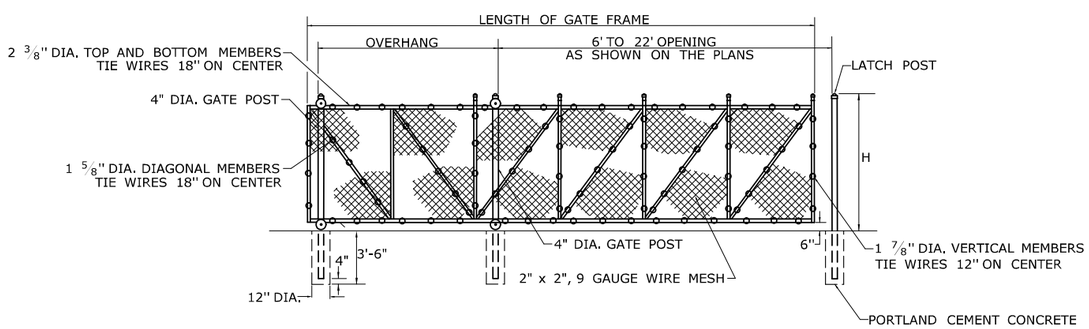

SINGLE CANTILEVERED SLIDING GATE

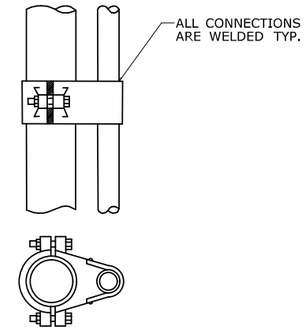

TOP GATE HINGE

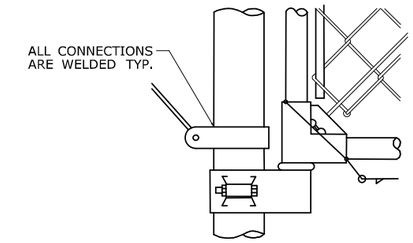

GATE HINGE BOTTOM

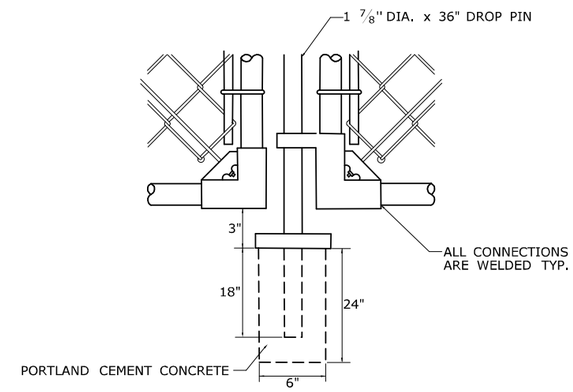

GATE STOP

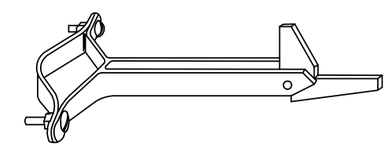

GATE HOLD BACK

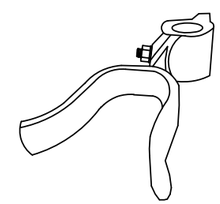

GATE LATCH

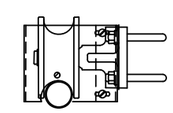

ROLLER ASSEMBLY WITH ROLL-R-GUARD (TOP)

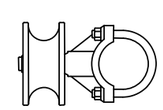

ROLLER ASSEMBLY (GUARD NOT SHOWN)

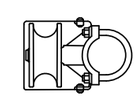

ROLLER ASSEMBLY WITH ROLL-R-GUARD (BOTTOM)

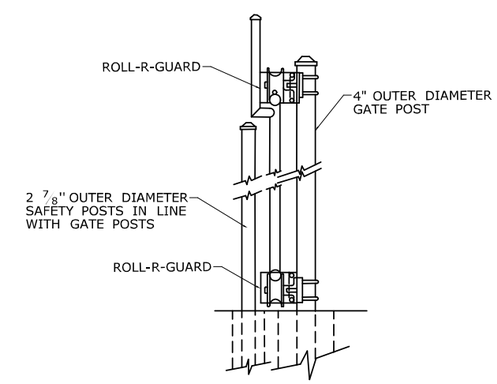

SECTION AT GATE POSTS WITH ROLLER COVERS/GUARDS AND SAFETY POSTS

REV.	DATE	REVISION DESCRIPTION
-	-	-
-	-	-
-	-	-
-	-	-
-	-	-
-	-	-
-	-	-
-	-	-

THE INFORMATION, INCLUDING ESTIMATED QUANTITIES OF WORK, SHOWN ON THESE SHEETS IS BASED ON LIMITED INVESTIGATIONS BY THE STATE AND IS IN NO WAY WARRANTED TO INDICATE THE CONDITIONS OF ACTUAL QUANTITIES OF WORK WHICH WILL BE REQUIRED.

Plotted Date: 5/1/2019

NOT TO SCALE

STATE OF CONNECTICUT
DEPARTMENT OF TRANSPORTATION

Filename: CTDOT_HIGHWAY_STD_[_4-16-19_].dgn Model: 297 - HW-913_02

SUBMITTED BY: NAME/DATE/TIME: Leo Fontaine, P.E. 2019.05.01 11:40:36-04'00'

APPROVED BY: NAME/DATE/TIME: Gregory M. Dorosh, P.E. 2019.05.06 11:01:05-04'00'

CTDOT STANDARD SHEET

OFFICE OF ENGINEERING

STANDARD SHEET TITLE:

CHAIN LINK FENCE GATES

STANDARD SHEET NO.: HW-913_02

GENERAL NOTES:

1. DRIVEWAY ENTRANCE SHALL BE A MINIMUM OF 12' WIDE, EXCLUDING CURBING WHEN PRESENT.
2. WELDED WIRE FABRIC MATS WITH REINFORCING AT CLOSER SPACING MAY BE USED.
3. SURFACE HMA S0.375 TO BE PLACED IN TWO EQUAL LIFTS FOR BOTH RESIDENTIAL AND COMMERCIAL DRIVEWAYS.

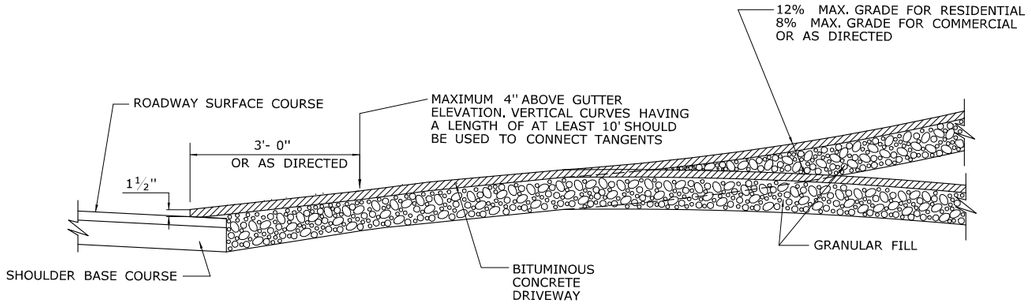

SECTION A

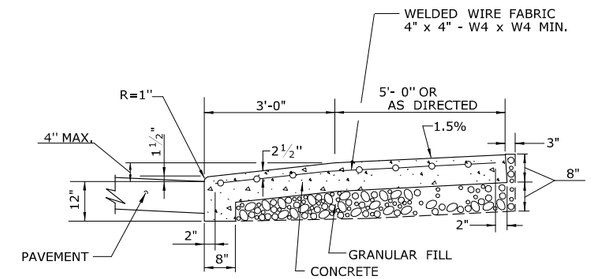

SECTION C

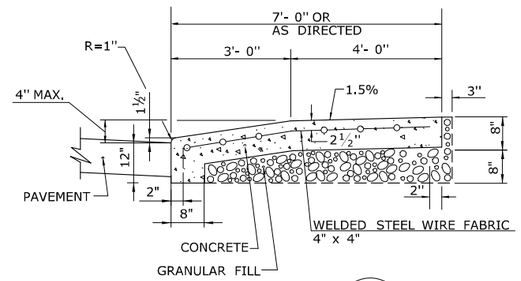

SECTION B

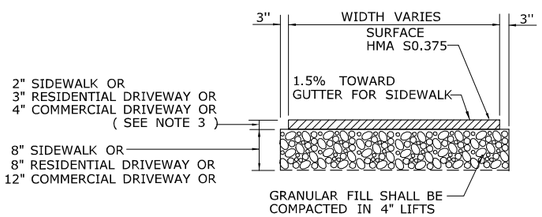

TYPICAL SECTION
BITUMINOUS CONCRETE
SIDEWALK AND DRIVEWAY

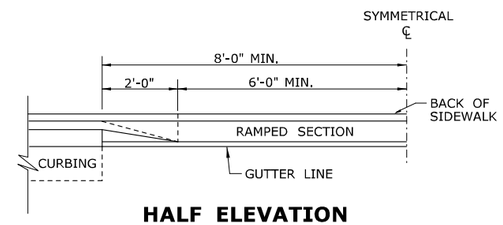

HALF ELEVATION

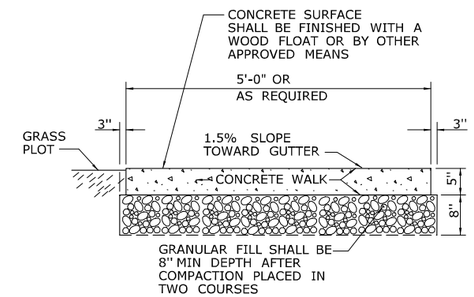

SECTION D

5' WIDE CONCRETE
SIDEWALK WITH GRASS PLOT

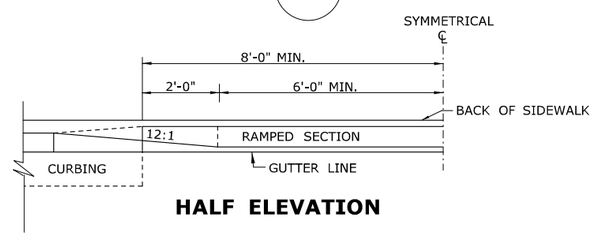

HALF ELEVATION

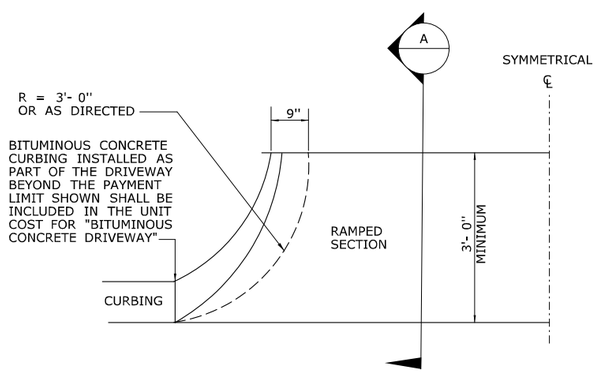

HALF BITUMINOUS CONCRETE
DRIVEWAY PLAN

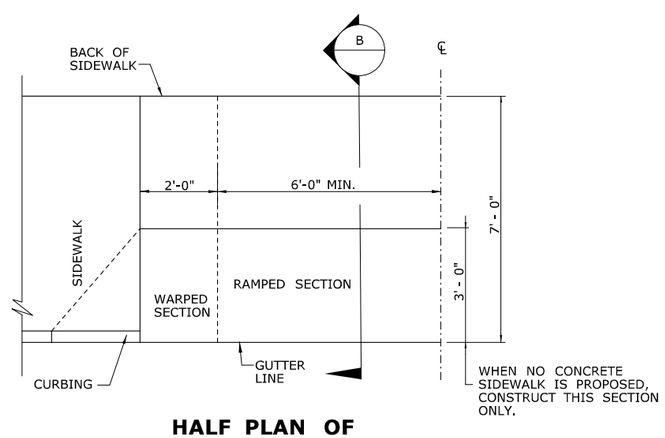

HALF PLAN OF
CONCRETE DRIVEWAY RAMP WHERE
SIDEWALK ADJOINS CURBING

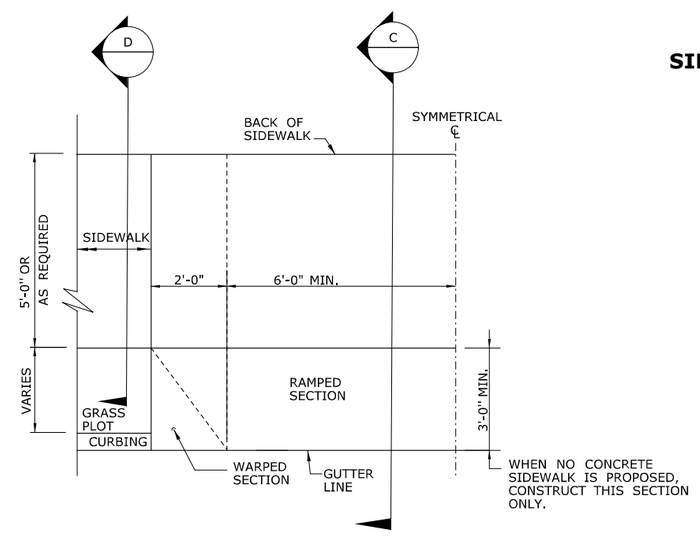

HALF PLAN OF
CONCRETE DRIVEWAY RAMP WHERE
CURB IS SEPARATED FROM
SIDEWALK BY GRASS PLOT

REV.	DATE	REVISION DESCRIPTION
1	6/01/10	REVISED BORDER TITLE
2	6/01/10	REVISED HALF ELEVATION DETAILS
3	1/12	REVISE 2% MAX. SLOPE NOTE
4	6/17	REVISED SLOPES & MATERIAL COMPOSITIONS
-	-	INCREASED WALKING WIDTH OF CONCRETE DRIVEWAY RAMP

THE INFORMATION, INCLUDING ESTIMATED QUANTITIES OF WORK, SHOWN ON THESE SHEETS IS BASED ON LIMITED INVESTIGATIONS BY THE STATE AND IS IN NO WAY WARRANTED TO INDICATE THE CONDITIONS OF ACTUAL QUANTITIES OF WORK WHICH WILL BE REQUIRED.

Plotted Date: 6/6/2017

NOT TO SCALE

STATE OF CONNECTICUT
DEPARTMENT OF TRANSPORTATION

Filename: HW-921_01.dgn Model: CT_Civil_2D_Sheet

SUBMITTED BY: NAME/DATE/TIME: Leo Fontaine, P.E. 2017.06.07 07:34:10-04'00'

APPROVED BY: NAME/DATE/TIME: Gregory M. Dorosh, P.E. 2017.06.07 10:47:32-04'00'

CTDOT
STANDARD SHEET

OFFICE OF ENGINEERING

STANDARD SHEET TITLE:

DRIVEWAY RAMPS AND SIDEWALKS

STANDARD SHEET NO.:

HW-921_01