ONLY STANDARD SHEETS MARKED WITH AN "✓" ARE IN THIS PROJECT #

	SHEET NO.	TITLE	APPROVAL DATE
☐	TR-1000_01	GENERAL CLAUSES (TEST PROCEDURES)	1/2014
☐	TR-1001_01	TRENCHING & BACKFILLING, ELECTRICAL CONDUIT	4/2012
☐	TR-1002_01	TRAFFIC CONTROL FOUNDATIONS	1/2014
☐	TR-1010_01	CONCRETE HANDHOLE	4/2014
☐	TR-1102_01	PEDESTALS, PEDESTRIAN SIGNALS	4/2012
☐	TR-1105_01	TRAFFIC SIGNALS AND CABLE ASSIGNMENTS	8/2018
☐	TR-1107_01	PEDESTRIAN PUSH BUTTON	8/2018
☐	TR-1108_01	CONTROLLERS	5/2013
☐	TR-1111_01	LOOP VEHICLE DETECTOR AND SAWCUT	4/2014
☐	TR-1113_01	CONTROL CABLE	4/2014
☐	TR-1114_01	BONDING & UTILITY POLE ATTACHMENT DETAILS, SIGN HANGER, "Y" CLAMP DETAILS	8/2018

	SHEET NO.	TITLE	APPROVAL DATE
☐	TR-1205_01	DELINEATION, DELINEATORS AND OBJECT MARKER DETAILS	8/2018
✓	TR-1208_01	SIGN PLACEMENT AND RETROREFLECTIVE STRIP DETAILS	8/2018
✓	TR-1208_02	METAL SIGN POSTS AND SIGN MOUNTING DETAILS	6/2017
☐	TR-1210_01	PAVEMENT MARKINGS (DURABLE MARKINGS) FOR DIVIDED HIGHWAYS	OBSOLETE
☐	TR-1210_02	PAVEMENT MARKINGS (DURABLE MARKINGS) FOR DIVIDED HIGHWAYS	OBSOLETE
☐	TR-1210_03	SPECIAL DETAILS & TYPICAL PAVEMENT MARKINGS FOR TWO-WAY HIGHWAYS	OBSOLETE
✓	TR-1210_04	PAVEMENT MARKING LINES AND SYMBOLS	8/2018
☐	TR-1210_05	PAVEMENT MARKINGS FOR DIVIDED HIGHWAYS	4/2017
☐	TR-1210_06	PAVEMENT MARKINGS FOR DIVIDED HIGHWAYS	8/2018
☐	TR-1210_07	PAVEMENT MARKINGS FOR EXIT RAMPS	4/2017
✓	TR-1210_08	PAVEMENT MARKINGS FOR NON FREEWAYS	8/2018
✓	TR-1210_09	PAVEMENT MARKINGS FOR BICYCLE LANES, PARKING STALLS, AND RR CROSSINGS	4/2017
✓	TR-1220_01	SIGNS FOR CONSTRUCTION AND PERMIT OPERATIONS	8/2018
✓	TR-1220_02	CONSTRUCTION SIGN SUPPORTS AND CHANNELIZING DEVICES	8/2018

STANDARD SHEETS SHALL BE USED WITH STANDARD SPECIFICATIONS

REV.	DATE	REVISION DESCRIPTION
4	4-2017	REMOVED TR-1210_01 TO TR-1210_03. ADDED TR-1210_04 TO TR-1210_09
3	4-2014	REMOVED TR-1111_02.
2	1-2014	REMOVED TR-1103_01.
1	4-2012	RENUMBERED TR-1107_02 TO TR-1114_01. REMOVED TR-1116_01.

THE INFORMATION, INCLUDING ESTIMATED QUANTITIES OF WORK, SHOWN ON THESE SHEETS IS BASED ON LIMITED INVESTIGATIONS BY THE STATE AND IS IN NO WAY WARRANTED TO INDICATE THE CONDITIONS OF ACTUAL QUANTITIES OF WORK WHICH WILL BE REQUIRED.

Plotted Date: 8/16/2018

NOT TO SCALE

STATE OF CONNECTICUT
DEPARTMENT OF TRANSPORTATION

Filename: CTDOT_TRAFFIC_STD_DGN.DGN Model: TR-01-STD_INDEX

SUBMITTED BY: NAME/DATE/TIME:

CTDOT
STANDARD SHEET

OFFICE OF ENGINEERING

STANDARD SHEET TITLE:

TRAFFIC STANDARD SHEET INDEX

STANDARD SHEET NO.:

TR-STD_INDEX

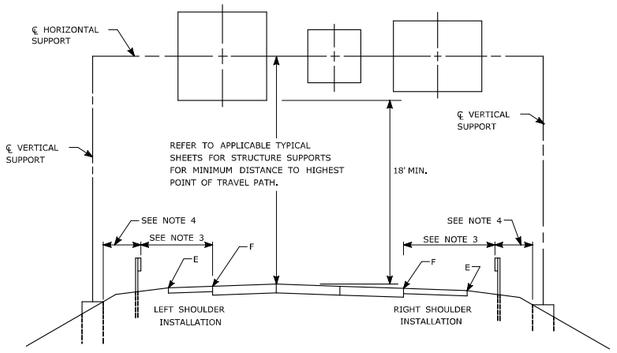

TYPICAL PLACEMENT OF OVERHEAD SIGNS ON SIGN SUPPORTS

NOTES:

1) FOR PLACEMENT OF CANTILEVER SIGN SUPPORT USE APPLICABLE PORTION OF ABOVE DETAIL.
2) BARRIER SYSTEMS MAY BE REQUIRED FOR BOTH SIDES OF SUPPORTS IN MEDIANS.
3) IMPACT PROTECTION SHALL BE PROVIDED FOR THE SIGN SUPPORTS LOCATED WITHIN CLEAR ZONE.
4) SIGN SUPPORT FOUNDATIONS SHALL BE LOCATED OUTSIDE OF BARRIER SYSTEMS DEFLECTION AREA.
5) ALL SIGNS ARE TO BE LEVEL, REGARDLESS OF CAMBER IN SUPPORT.

FOR MAXIMUM EFFECTIVENESS, POSITION SIDE MOUNTED SIGNS ON STRUCTURAL STEEL BREAKAWAY SIGN SUPPORTS AS FOLLOWS:

ON A TANGENT SECTION, POSITION THE SIGN SO THE VERTICAL AXIS IS PLUMB AND THE HORIZONTAL AXIS IS AT AN ANGLE OF 90° WITH THE TRAFFIC LANE WHICH THE SIGN SERVES. SIGNS LOCATED 30 FT OR MORE FROM THE EDGE OF THE ROAD SHALL BE TURNED APPROXIMATELY 3° TOWARD THE ROAD.

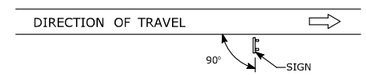

DIAGRAM "A"

ON A HORIZONTAL CURVE SECTION, POSITION THE SIGN SO THE VERTICAL AXIS IS PLUMB AND THE HORIZONTAL AXIS IS AT AN ANGLE OF 90° WITH A STRAIGHT LINE BETWEEN THE SIGN AND THE POINT AT WHICH THE SIGN SHALL BE READ.

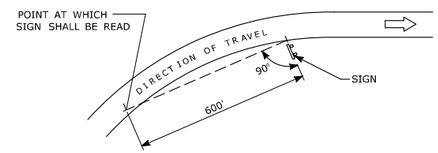

DIAGRAM "B"

SIGN ORIENTATION DETAILS FOR SIDE MOUNTED SIGNS ON STRUCTURAL STEEL BREAKAWAY SIGN SUPPORTS

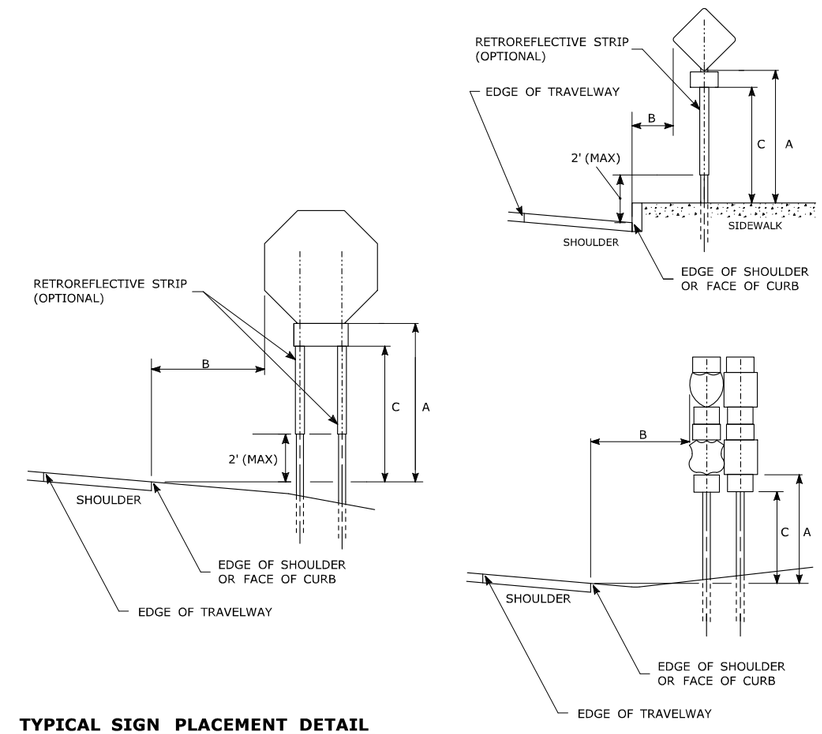

TYPICAL SIGN PLACEMENT DETAIL

NOTES:

ALL SIGNS AND SHIELDS ON DIRECTIONAL ASSEMBLIES SHALL ABUT VERTICALLY.

REFER TO STANDARD SHEET No. TR-1208_02 "METAL SIGN POSTS AND SIGN MOUNTING DETAILS" FOR SIGN POSTS AND SIGN MOUNTING.

IF A RETFOREFLECTIVE STRIP IS USED ON SIGN SUPPORT, IT SHALL BE PLACED FOR THE FULL LENGTH OF THE SUPPORT FROM THE BOTTOM OF THE SIGN TO WITHIN 2 FT ABOVE THE EDGE OF THE ROADWAY.

PARKING SIGNS TYPICALLY USE 45° MOUNTING BRACKET.

DIM."A" MIN SIGN HEIGHT	DIM."B" MIN LATERAL OFFSET ①	DIM."C" MIN PLAQUE HEIGHT ①	ASSEMBLY LOCATION
7' ②	6' 12' ③	5'	SIGNS ON FREEWAYS AND EXPRESSWAYS EXCEPT CHEVRON ALIGNMENT SIGNS, ONE-DIRECTION LARGE ARROW SIGNS, DO NOT ENTER SIGNS, AND WRONG WAY SIGNS
5'	2'	4'	• SIGNS IN RURAL AREAS • DO NOT ENTER AND WRONG WAY SIGNS ALONG EXIT RAMPS • DO NOT ENTER AND WRONG WAY SIGNS ON LIMITED ACCESS HIGHWAYS
5'	2'	N/A	• CHEVRON ALIGNMENT SIGNS LOCATED ON FREEWAYS, EXPRESSWAYS, RAMPS, AND IN RURAL AREAS • ONE-DIRECTION LARGE ARROW SIGNS LOCATED ON FREEWAYS, EXPRESSWAYS, RAMPS, AND IN RURAL AREAS
4'	6' 12' ③	N/A	INCIDENT MANAGEMENT SIGNS AND MILE POST MARKER ASSEMBLIES LOCATED ON FREEWAYS AND EXPRESSWAYS
4'	2'	4'	CENTRAL ISLANDS OF ROUNDABOUTS
7'	2' ④	6'	BUSINESS & RESIDENTIAL AREAS WHERE PARKING OR OTHER OBSTRUCTIONS LIMIT VISIBILITY
7'	2' ④	7'	SIDEWALKS ⑤

① OR AS DIRECTED BY THE ENGINEER

② 8 FT MINIMUM HEIGHT REQUIRED IF A SUPPLEMENTAL PLAQUE IS SUBMOUNTED BELOW THE MAJOR SIGN.

③ 6 FT FROM EDGE OF SHOULDER, WHEN SHOULDER IS OVER 6 FT WIDE
12 FT FROM EDGE OF TRAVELWAY, WHEN SHOULDER IS LESS THAN 6 FT WIDE.

④ A LATERAL OFFSET OF AT LEAST 1 FT FROM THE FACE OF THE CURB MAY BE USED WHERE SIDEWALK WIDTH IS LIMITED OR WHERE EXISTING UTILITY POLES ARE CLOSE TO THE CURB.

⑤ A CLEAR PATH OF NOT LESS THAN 4 FT SHALL BE PROVIDED IN SIDEWALK AREAS.

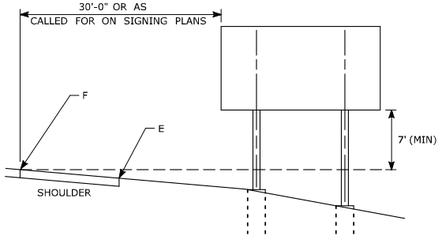

TYPICAL PLACEMENT OF SIDE MOUNTED SIGNS ON STRUCTURAL STEEL BREAKAWAY SIGN SUPPORTS

NOTES:

1) MIN. VERTICAL CLEARANCE ABOVE SIDEWALKS SHALL BE 7'.
2) WHERE GUIDE RAIL IS USED, THE OFFSET TO THE NEAR EDGE OF SIGN FACE SHALL BE AS SHOWN ELSEWHERE IN THE CONTRACT PLANS.
3) ON INTERSECTING ROADS AT RAMP TERMINI, THE OFFSET TO THE NEAR EDGE OF OF SIGN FACE SHALL BE 6' MIN. FROM POINT "E".
4) IF 30'-0" MIN. CANNOT BE MET, PLEASE CONTACT THE ENGINEER.

RETROREFLECTIVE STRIPS 48" LONG OR LESS:

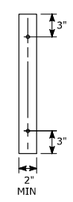

RETROREFLECTIVE STRIPS OVER 48" LONG:

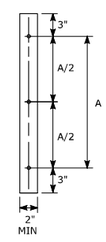

RETROREFLECTIVE STRIP DETAIL

NOTES:

RETROREFLECTIVE STRIPS WHICH ARE 48 IN LONG OR LESS SHALL BE ATTACHED USING 2 BOLTS AND RETROREFLECTIVE STRIPS OVER 48 IN LONG SHALL BE ATTACHED USING 3 BOLTS AS SHOWN ON THE DETAILS ABOVE.
REFER TO STANDARD SHEET No. TR-1208_02 "METAL SIGN POSTS AND SIGN MOUNTING DETAILS" FOR MOUNTING DETAILS.

RETROREFLECTIVE STRIP COLOR SHALL MATCH THE BACKGROUND COLOR OF THE SIGN, EXCEPT THAT THE COLOR OF THE STRIP FOR "YIELD" AND "DO NOT ENTER" SIGNS SHALL BE RED.

REV.	DATE	REVISION DESCRIPTION
3	8-2018	INCLUDED INCIDENT MANAGEMENT AND MILE MARKER SIGNS.
2	4-2017	MINOR REVISIONS.
1	2-2011	MINOR REVISIONS.

THE INFORMATION, INCLUDING ESTIMATED QUANTITIES OF WORK, SHOWN ON THESE SHEETS IS BASED ON LIMITED INVESTIGATIONS BY THE STATE AND IS IN NO WAY WARRANTED TO INDICATE THE CONDITIONS OF ACTUAL QUANTITIES OF WORK WHICH WILL BE REQUIRED.

Plotted Date: 8/10/2018

NOT TO SCALE

STATE OF CONNECTICUT
DEPARTMENT OF TRANSPORTATION

Filename: TR_1208_01_1_2018.dgn Model: TR-1208_01

SUBMITTED BY: NAME/DATE/TIME: Mark F. Makuch, P.E. 2018.08.17 09:06:06-04'00'

APPROVED BY: NAME/DATE/TIME: Mark F. Carlino, P.E. 2018.08.21 07:48:06-04'00'

CTDOT STANDARD SHEET

OFFICE OF ENGINEERING

STANDARD SHEET TITLE:

SIGN PLACEMENT AND RETROREFLECTIVE STRIP DETAILS

STANDARD SHEET NO.: TR-1208_01

TYPICAL METAL SIGN POSTS

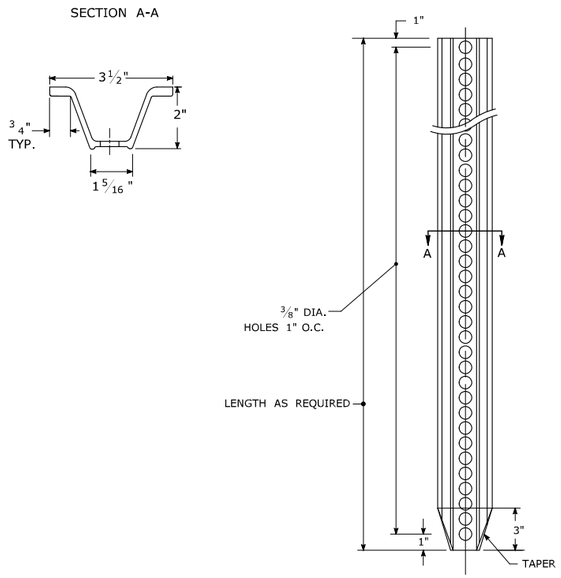

TYPICAL SIGN PANEL ATTACHMENT

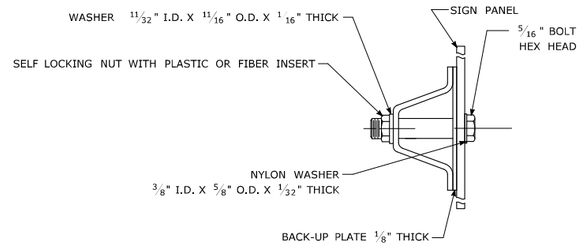

TYPICAL BACK TO BACK SIGN PANEL ATTACHMENT

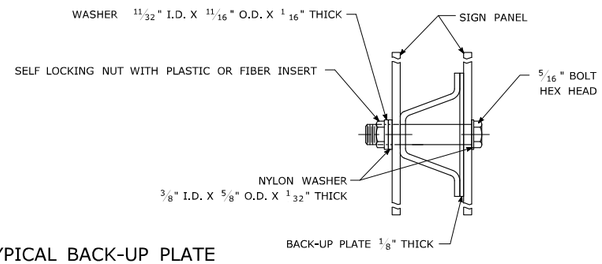

TYPICAL BACK-UP PLATE

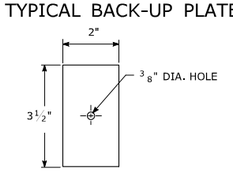

BOLTS - STAINLESS STEEL CONFORMING TO ASTM F593, ALLOY GROUP 1 OR 2 (ALLOY TYPES 304 OR 316).
SELF LOCKING NUTS - STAINLESS STEEL CONFORMING TO ASTM F594, ALLOY GROUP 1 OR 2 (ALLOY TYPES 304 OR 316).
WASHERS - STAINLESS STEEL CONFORMING TO ASTM A240, (ALLOY TYPES 304 OR 316).

METAL DELINEATOR POST

WT./FT. = 1.12 LBS./FT. MIN.

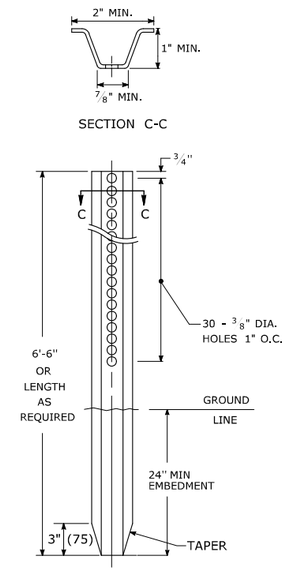

GENERAL NOTES:

1. STEEL FOR DELINEATOR POSTS SHALL BE ASTM A36 STEEL. STEEL FOR ALL OTHER POSTS SHALL CONFORM TO THE MECHANICAL REQUIREMENTS OF ASTM A 499 GRADE 80 AND TO THE CHEMICAL REQUIREMENTS OF ASTM A1 CARBON STEEL TEE RAIL HAVING NOMINAL WEIGHT (MASS) OF 91 LBS. OR GREATER PER LINEAR YARD.
2. AFTER FABRICATION, ALL STEEL POSTS, STRAPS AND PLATES SHALL BE GALVANIZED TO MEET THE REQUIREMENTS OF ASTM A123.
3. WASHERS FOR BREAKAWAY INSTALLATIONS SHALL MEET ASTM F436, TYPE 1.
4. SPACER BAR FOR BREAKAWAY INSTALLATION SHALL CONFORM TO THE MECHANICAL REQUIREMENTS OF ASTM A36.
5. ALL BOLTS, NUTS, AND WASHERS FOR BREAKAWAY INSTALLATIONS SHALL BE GALVANIZED TO MEET THE REQUIREMENTS OF ASTM A153.
6. ALL SIGN POSTS SHALL HAVE BREAKAWAY FEATURES THAT MEET AASHTO REQUIREMENTS CONTAINED IN THE CURRENT "STANDARD SPECIFICATIONS FOR STRUCTURAL SUPPORTS FOR HIGHWAY SIGNS, LUMINAIRES AND TRAFFIC SIGNALS." THE BREAKAWAY FEATURES SHALL BE STRUCTURALLY ADEQUATE TO CARRY THE SIGNS SHOWN IN THE PLANS AT 60 mph WIND LOADINGS. INSTALLATIONS SHALL BE IN ACCORDANCE WITH MANUFACTURERS RECOMMENDATIONS.
7. SIGN POSTS SHALL BE 4 LBS./FT.

BREAKAWAY INSTALLATION

FOR 4 LBS./FT. POSTS

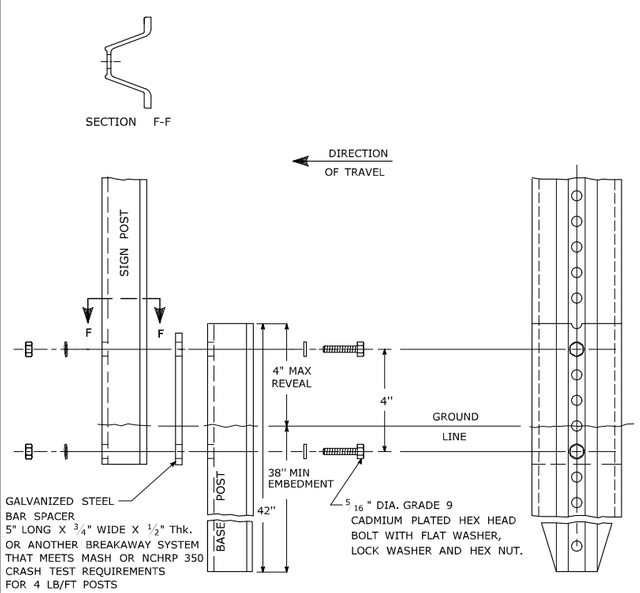

TYPICAL SIGN POST INSTALLATION IN LEDGE

LEDGE SHALL BE REMOVED TO DRIVE THE BASE POST TO A DEPTH OF 38".

HOLE SHALL BE FILLED WITH SUB-BASE MATERIAL AND COMPACTED WITH A TAMPING BAR, OR TECHNIQUE APPROVED BY THE ENGINEER, PRIOR TO BASE POST INSTALLATION.

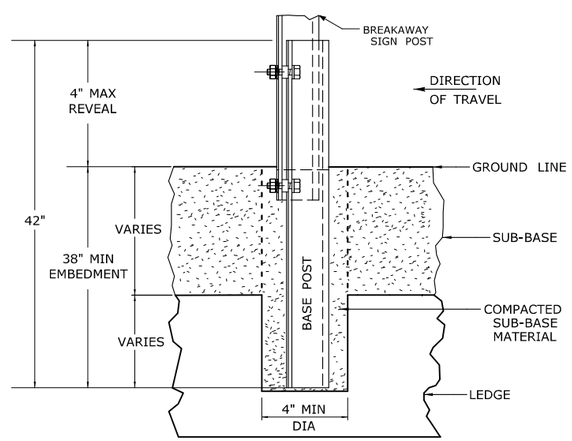

TYPICAL SLEEVE FOR PAVED AREAS

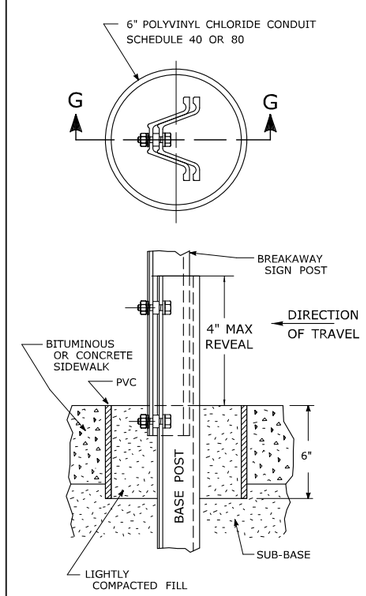

45° MOUNTING BRACKET FOR INSTALLATION OF PARKING SIGNS

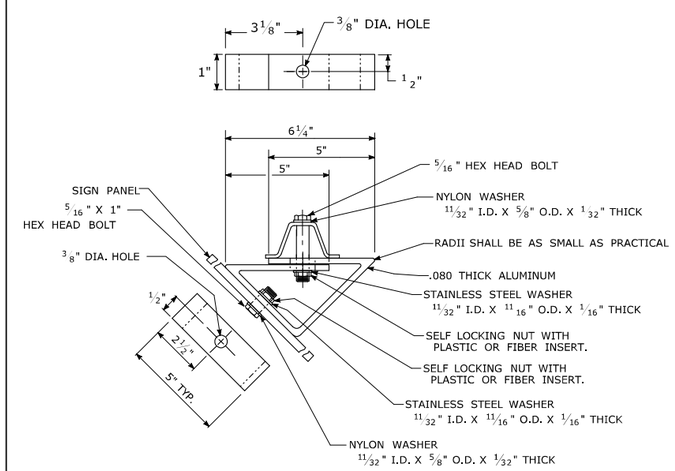

REV.	DATE	REVISION DESCRIPTION
2	6-2017	SIGN POST REVISIONS.
1	2-2011	MINOR REVISIONS.

THE INFORMATION, INCLUDING ESTIMATED QUANTITIES OF WORK, SHOWN ON THESE SHEETS IS BASED ON LIMITED INVESTIGATIONS BY THE STATE AND IS IN NO WAY WARRANTED TO INDICATE THE CONDITIONS OF ACTUAL QUANTITIES OF WORK WHICH WILL BE REQUIRED.

Plotted Date: 6/6/2017

NOT TO SCALE

STATE OF CONNECTICUT
DEPARTMENT OF TRANSPORTATION

Filename: TR-1208_02_May_2017_Revision.dgn Model: TR-1208_02

SUBMITTED BY: NAME/DATE/TIME:
Mark F. Makuch, P.E. 2017.06.07 07:30:30-04'00'
Mary E. Baker, P.E. 2017.06.13 15:28:14-04'00'
APPROVED BY: NAME/DATE/TIME:
Gregory M. Dorosh, P.E. 2017.06.15 09:27:29-04'00'

CTDOT
STANDARD SHEET

OFFICE OF ENGINEERING

STANDARD SHEET TITLE:

METAL SIGN POSTS AND SIGN MOUNTING DETAILS

GUIDE SHEET NO.:

TR-1208_02

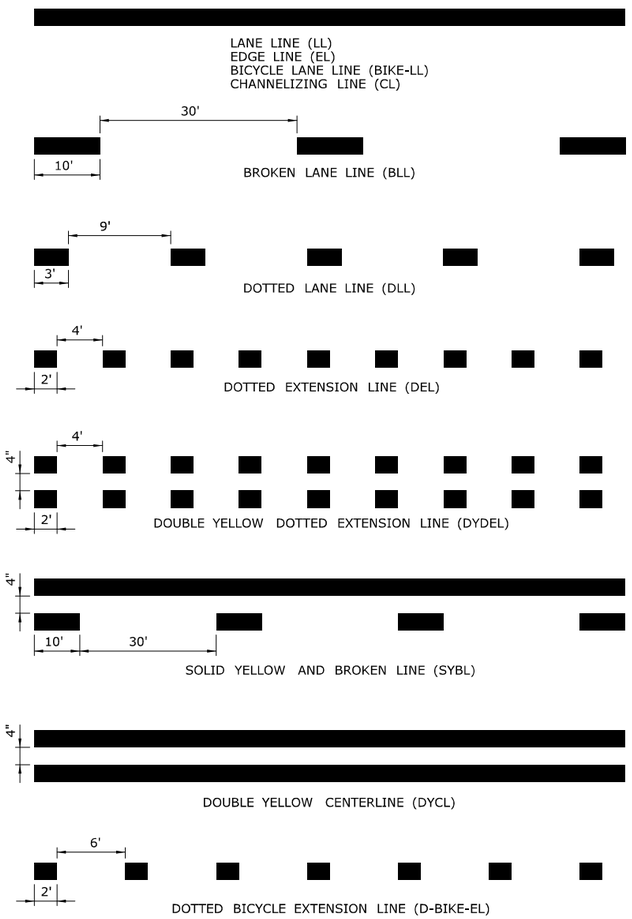

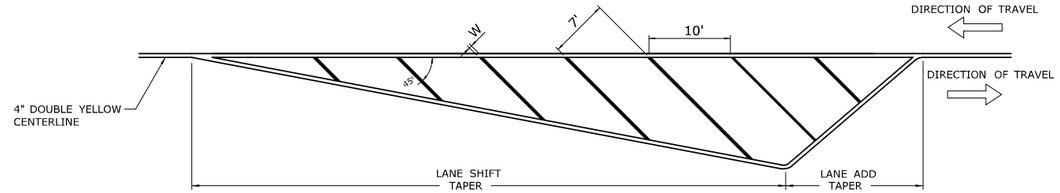

CROSS HATCHED ISLAND DETAIL
(YELLOW)

W IS TO BE 6" WHEN POSTED SPEED ≤ 45 MPH
W IS TO BE 12" WHEN POSTED SPEED > 45 MPH
CROSS HATCHED ISLANDS ARE TO BE INSTALLED WHERE CALLED FOR ON THE PLANS

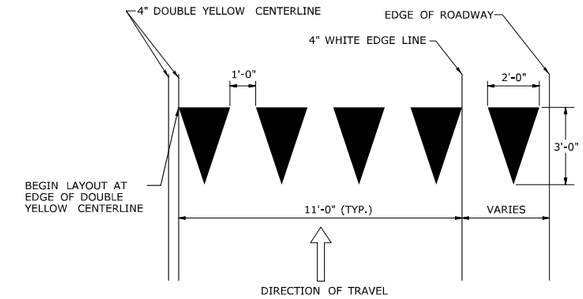

YIELD LINE DETAIL
(WHITE)

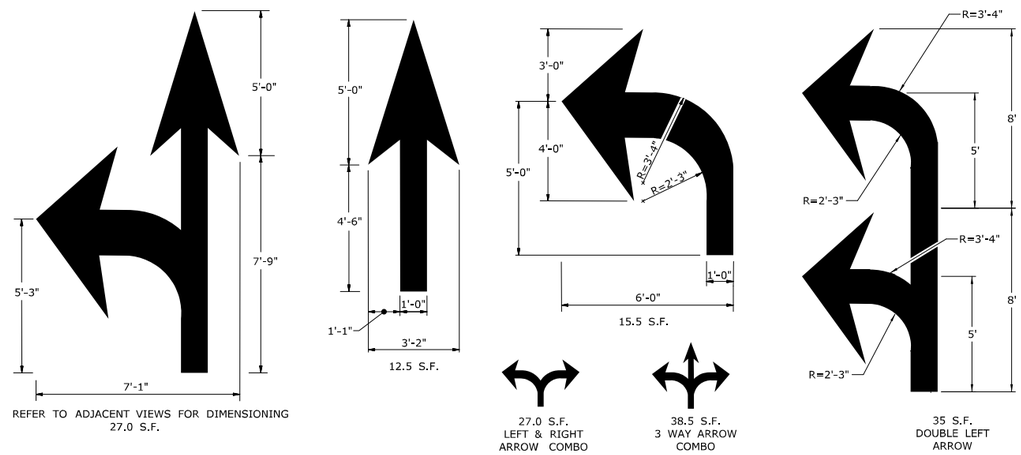

PAVEMENT ARROW DETAILS
(WHITE)
ARROWS SHALL BE CENTERED IN TRAVEL LANE

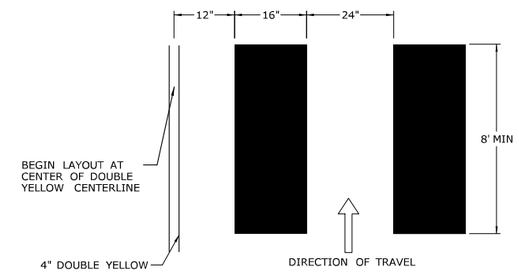

CROSSWALK DETAIL
(WHITE)

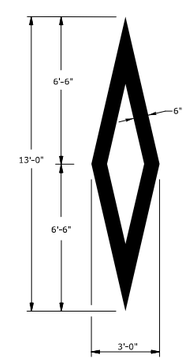

WHITE PREFERENTIAL LANE SYMBOL
13.0 S.F.

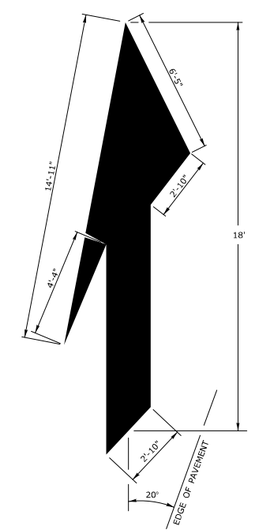

WHITE LANE REDUCTION ARROW
41.8 S.F.

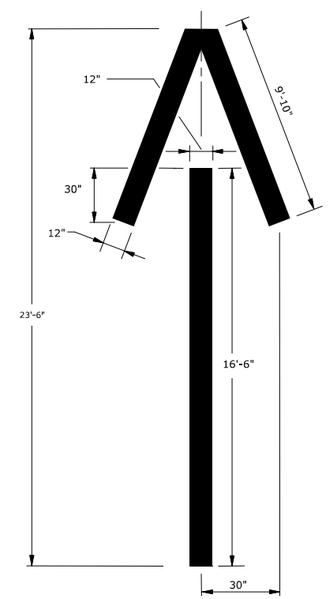

WHITE WRONG WAY PAVEMENT ARROW
36.2 S.F.

NOTES :

1. AREA OF PAVEMENT MARKINGS AS INDICATED IS APPROXIMATE.
2. RIGHT TURN PAVEMENT MARKING ARROWS ARE MIRROR IMAGE OF LEFT TURN PAVEMENT MARKING ARROWS.

REV.	DATE	REVISION DESCRIPTION
1	8-2018	REMOVED ROUNDABOUT MARKINGS.

THE INFORMATION, INCLUDING ESTIMATED QUANTITIES OF WORK, SHOWN ON THESE SHEETS IS BASED ON LIMITED INVESTIGATIONS BY THE STATE AND IS IN NO WAY WARRANTED TO INDICATE THE CONDITIONS OF ACTUAL QUANTITIES OF WORK WHICH WILL BE REQUIRED.

Plotted Date: 8/10/2018

NOT TO SCALE

STATE OF CONNECTICUT
DEPARTMENT OF TRANSPORTATION

Filename: TR-1210_04.dgn Model: CT_Civil_2D_Sheet

SUBMITTED BY: NAME/DATE/TIME: Mark F. Makuch, P.E. 2018.08.17 09:07:44-04'00'

APPROVED BY: NAME/DATE/TIME: Mark F. Carlino, P.E. 2018.08.21 07:48:45-04'00'

CTDOT
STANDARD SHEET

OFFICE OF ENGINEERING

STANDARD SHEET TITLE:

PAVEMENT MARKING LINES AND SYMBOLS

STANDARD SHEET NO.:

TR-1210_04

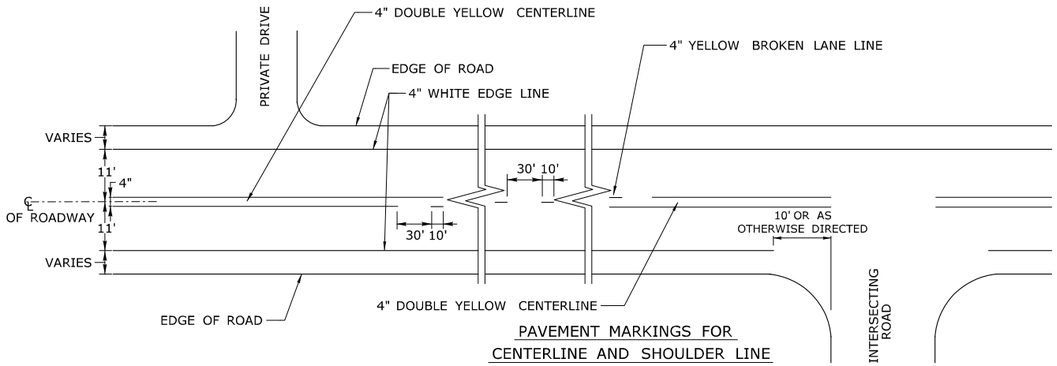

PAVEMENT MARKINGS FOR CENTERLINE AND SHOULDER LINE

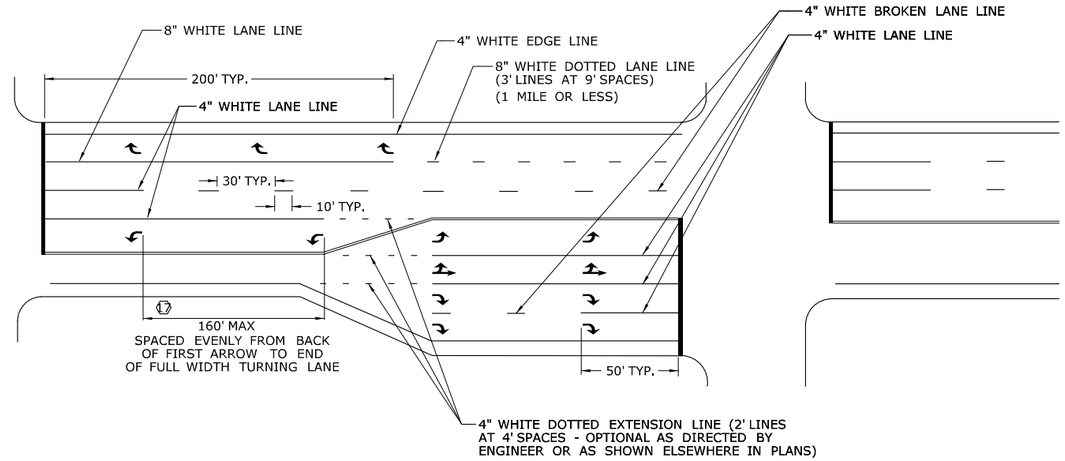

PAVEMENT MARKINGS FOR TURNING LANES AND ROAD LANE-DROP

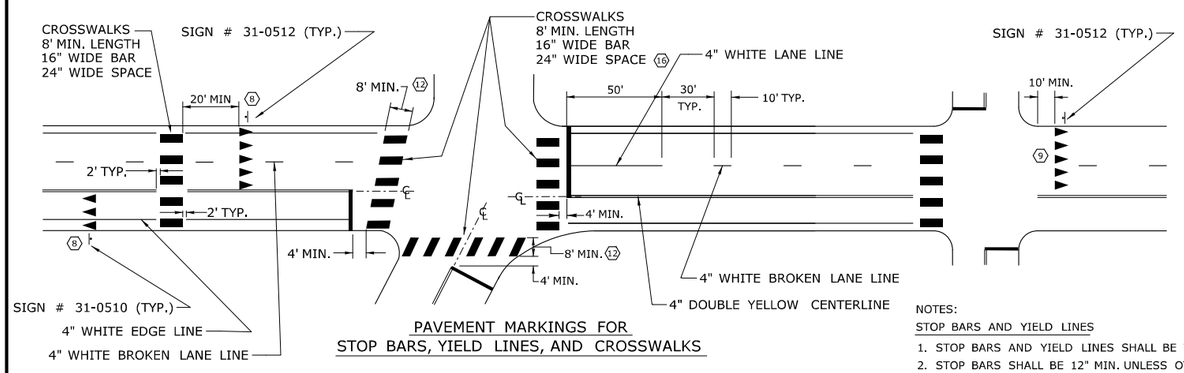

PAVEMENT MARKINGS FOR STOP BARS, YIELD LINES, AND CROSSWALKS

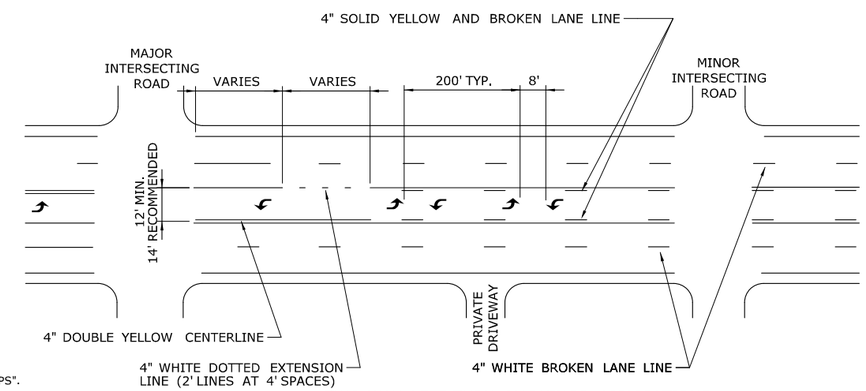

TWO-WAY LEFT-TURN MARKINGS APPLICATIONS

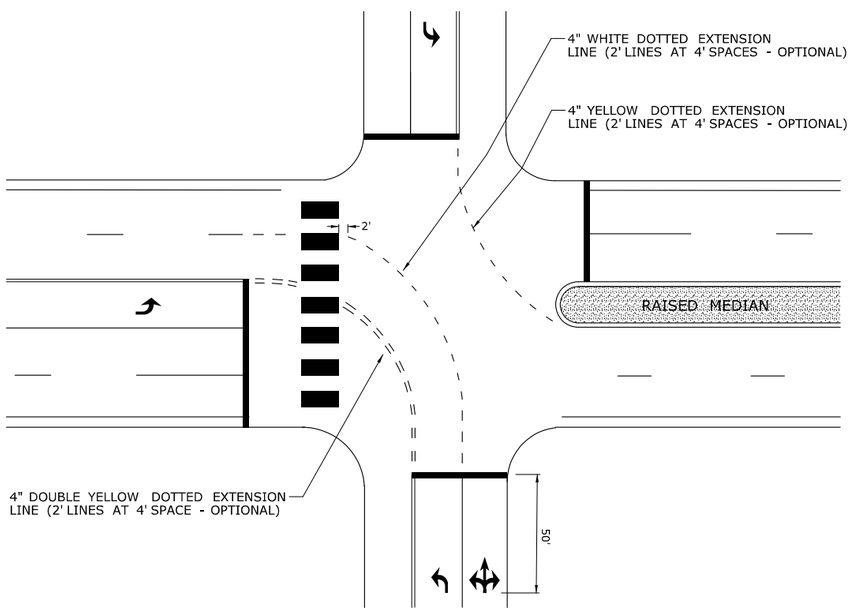

TURNING EXTENSIONS

NOTES:

STOP BARS AND YIELD LINES

1. STOP BARS AND YIELD LINES SHALL BE WHITE.
2. STOP BARS SHALL BE 12" MIN. UNLESS OTHERWISE NOTED ON PLANS.
3. STOP BARS TO BE PLACED A MINIMUM OF 4' IN ADVANCE OF THE NEAREST EDGE OF CROSSWALK AND SHOULD BE PLACED 90° TO THE CENTERLINE OF THE ROADWAY.
4. IN THE ABSENCE OF A MARKED CROSSWALK THE STOP BAR SHOULD BE PLACED 90° TO THE CENTERLINE OF THE ROADWAY, AT THE DESIRED STOPPING POINT AT LEAST 5' AND NO MORE THAN 30' FROM THE NEAREST EDGE OF THE INTERSECTING ROADWAY.
5. THE STOP SIGN SHOULD BE PLACED IN LINE WITH THE STOP BAR. HOWEVER, IF THE STOP SIGN CANNOT BE LOCATED EXACTLY WHERE VEHICLES ARE EXPECTED TO STOP, THE STOP BAR SHOULD BE PLACED AT THE STOPPING POINT.
6. FOR STOP BARS AT RAMPS SEE DETAILS "R", "S", "T", & "U" AND NOTES ON TRAFFIC STANDARD SHEET TR-1210 07 "PAVEMENT MARKINGS FOR DIVIDED HIGHWAYS EXIT RAMPS".
7. FOR YIELD LINE INSTALLATIONS, ONLY FULL TRIANGLES ARE TO BE INSTALLED.

8. MID-BLOCK CROSSWALKS ARE CROSSWALKS LOCATED MORE THAN 50 FEET FROM A SIGNALIZED OR UNSIGNALIZED INTERSECTION. YIELD LINES ASSOCIATED WITH MIDBLOCK CROSSWALKS SHALL BE INSTALLED AND SHOULD BE LOCATED 20 TO 50 FEET IN ADVANCE OF THE NEAREST CROSSWALK LINE OR AS DIRECTED BY THE ENGINEER.
WHERE A YIELD LINE EXISTS ON AN APPROACH TO A CROSSWALK, THE APPROAPRIATE "YIELD TO PEDESTRIANS" SIGN IS REQUIRED.

9. FOR CROSSWALKS AT UNSIGNALIZED INTERSECTIONS WITH MINOR STREET STOP CONTROL, YIELD LINES SHALL BE INSTALLED ON MULTI-LANE APPROACHES, BUT NOT SINGLE LANE APPROACHES.

10. THE YIELD SIGN SHOULD BE PLACED IN LINE WITH A YIELD LINE. HOWEVER, IF THE YIELD SIGN CANNOT BE LOCATED EXACTLY WHERE VEHICLES ARE EXPECTED TO YIELD, THE YIELD LINE SHOULD BE PLACED AT THE YIELDING POINT.

CROSSWALKS

11. CROSSWALK MARKINGS SHALL BE WHITE.

12. AT LOCATIONS WHERE THE CROSSWALK IS SKEWED, BARS TO BE PARALLEL TO ℄ AND ENDS OF BARS TO BE PARALLEL. THE LENGTH OF THE BARS WILL VARY DEPENDING ON THE ANGLE OF SKEW.

13. BARS SHOULD BE NO CLOSER THAN 1' FROM EDGE OF ROAD.
14. ONLY FULL LENGTH BARS ARE TO BE INSTALLED.
15. DECORATIVE CROSSWALKS SHALL BE BANDED FROM CURB TO CURB WITH A MINIMUM 12" WIDE WHITE TRANSVERSE LINE ALONG EACH EDGE.

16. 24" WIDE SPACE TO BE CENTERED ON YELLOW CENTERLINE.

PAVEMENT MARKINGS FOR TURNING LANES

17. INSTALL AT LEAST TWO ARROWS PER LANE WHERE STORAGE LENGTH IS GREATER THAN 150 FEET.

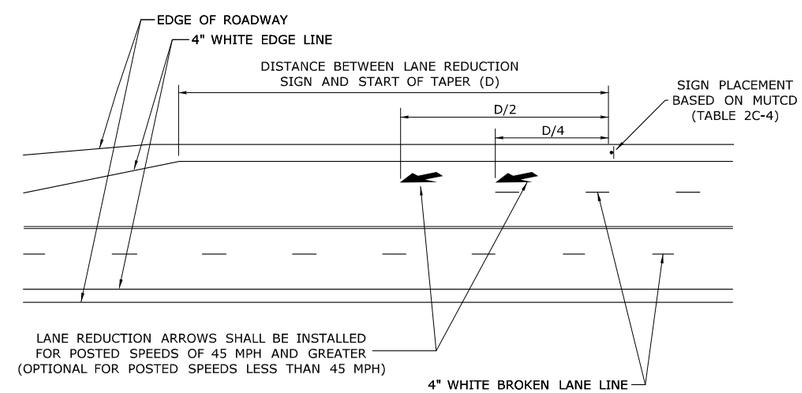

LANE REDUCTION TRANSITIONS

REV.	DATE	REVISION DESCRIPTION
1	8-2018	REVISED YIELD LINE SIGNAGE AND NOTES.

THE INFORMATION, INCLUDING ESTIMATED QUANTITIES OF WORK, SHOWN ON THESE SHEETS IS BASED ON LIMITED INVESTIGATIONS BY THE STATE AND IS IN NO WAY WARRANTED TO INDICATE THE CONDITIONS OF ACTUAL QUANTITIES OF WORK WHICH WILL BE REQUIRED.

Plotted Date: 8/10/2018

NOT TO SCALE

STATE OF CONNECTICUT
DEPARTMENT OF TRANSPORTATION

Filename: TR-1210_08.DGN Model: TR-1210_05

SUBMITTED BY: NAME/DATE/TIME: Mark F. Makuch, P.E. 2018.08.17 09:10:18-04'00'

APPROVED BY: NAME/DATE/TIME: Mark F. Carlino, P.E. 2018.08.21 07:49:18-04'00'

CTDOT STANDARD SHEET

OFFICE OF ENGINEERING

STANDARD SHEET TITLE:

PAVEMENT MARKINGS FOR NON FREEWAYS

STANDARD SHEET NO.: **TR-1210_08**

TYPICAL RAILROAD GRADE CROSSING DETAIL (LANE WIDTH ≥ 10')

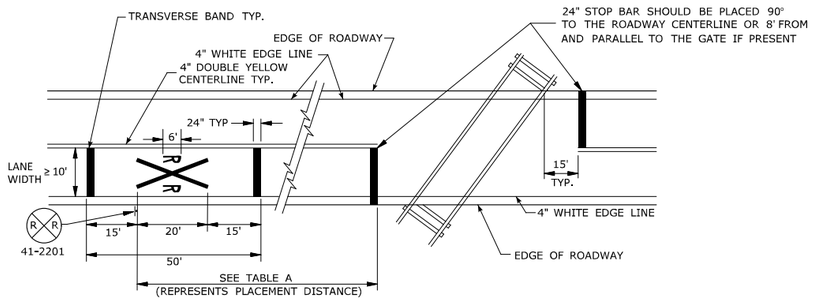

TYPICAL RAILROAD GRADE CROSSING DETAIL (LANE WIDTH < 10')

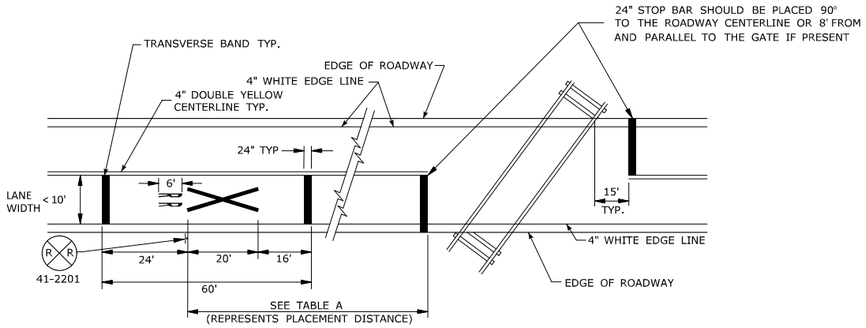

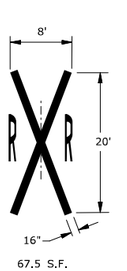

67.5 S.F.

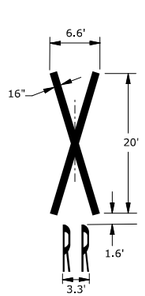

67.5 S.F.

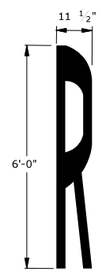

5.75 S.F.

TABLE A	
POSTED OR 85 PERCENTILE SPEED M.P.H.	MINIMUM DISTANCE FT.
20	100
25	100
30	100
35	100
40	125
45	175
50	250
55	325
60	400
65	475

NOTES:

GENERAL:

1. AREA OF PAVEMENT MARKING SYMBOLS AS INDICATED IS APPROXIMATE.
2. REFER TO STANDARD SHEET TR-1210_04 FOR PAVEMENT MARKING LINE DETAILS.

RAILROAD GRADE CROSSINGS:

3. RAILROAD MARKINGS SHALL BE WHITE.
4. ON MULTI-LANE ROADS THE TRANSVERSE BANDS SHOULD EXTEND ACROSS THE APPROACH LANES AND INDIVIDUAL R X R SYMBOLS SHOULD BE USED IN EACH APPROACH LANE.

PARKING STALLS:

5. AUTOMOBILE ACCESSIBLE PARKING SPACES SHALL BE 15' WIDE INCLUDING 5' OF CROSSHATCH.
6. VAN ACCESSIBLE PARKING SPACES SHALL BE 16' WIDE INCLUDING 8' OF CROSSHATCH.
7. ACCESS AISLES FOR ANGLED VAN PARKING SPACES SHALL BE LOCATED ON THE PASSENGER SIDE OF THE PARKING SPACE.
8. CROSS HATCHED ACCESS AISLES SHALL NOT BE SHARED BETWEEN PARKING SPACES.

TYPICAL LONGITUDINAL SPACING

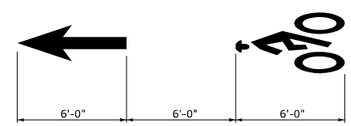

BICYCLE LANE SYMBOL MARKINGS

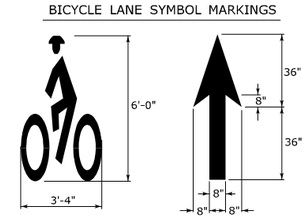

5.8 S.F.

4.7 S.F.

SHARED LANE SYMBOL MARKING

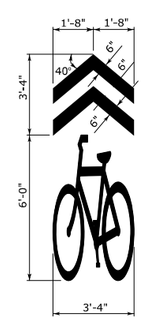

9.7 S.F.

BICYCLE DETECTOR SYMBOL MARKING

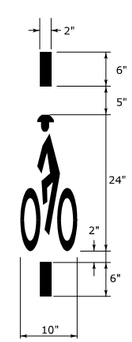

0.7 S.F.

TYPICAL PERPENDICULAR PARKING STALLS DETAIL

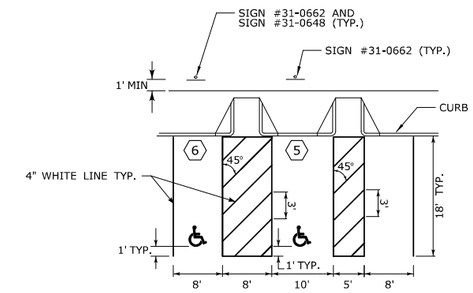

TYPICAL ANGLE PARKING STALLS DETAIL

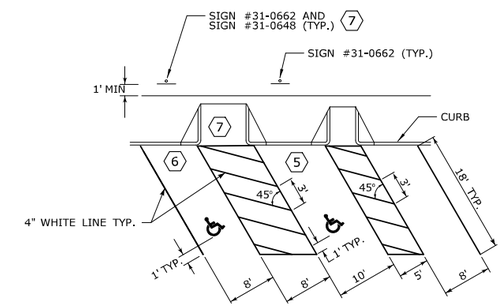

ACCESSIBLE PARKING SPACE SYMBOL

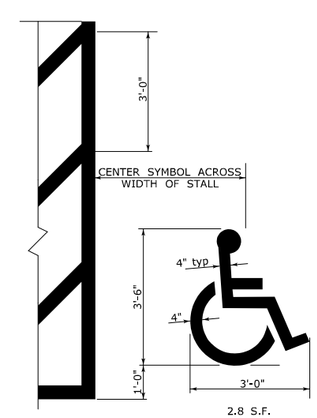

2.8 S.F.

REV.	DATE	REVISION DESCRIPTION

THE INFORMATION, INCLUDING ESTIMATED QUANTITIES OF WORK, SHOWN ON THESE SHEETS IS BASED ON LIMITED INVESTIGATIONS BY THE STATE AND IS IN NO WAY WARRANTED TO INDICATE THE CONDITIONS OF ACTUAL QUANTITIES OF WORK WHICH WILL BE REQUIRED.

Plotted Date: 4/3/2017

NOT TO SCALE

STATE OF CONNECTICUT
DEPARTMENT OF TRANSPORTATION

Filename: TR-1210_09.dgn Model: CT_Civil_2D_Sheet

SUBMITTED BY: NAME/DATE/TIME:
Mark F. Makuch, P.E. 2017.04.19 11:17:36-04'00'

APPROVED BY: NAME/DATE/TIME:
Gregory M. Dorosky, P.E. 2017.04.20 13:26:20-04'00'

CTDOT
STANDARD SHEET

OFFICE OF ENGINEERING

STANDARD SHEET TITLE:

PAVEMENT MARKINGS FOR BICYCLE LANES, PARKING STALLS, AND RAILROAD GRADE CROSSINGS

STANDARD SHEET NO.:

TR-1210_09

E5 - SERIES

E5-1

EXIT

COPY & BORDER - WHITE
BACKGROUND - GREEN

AREA (SQ. FT)	SIZE (INCHES)	CONN. D.O.T. #	POSTS
16.0	48	51-6147	2

16 - SERIES

CONSTRUCTION AHEAD
ROAD USE RESTRICTED
STATE LIABILITY LIMITED
GENERAL STATUTES SEC 13a-115, 13a-145
COMMISSIONER OF TRANSPORTATION

	AREA (SQ. FT)	SIZE (INCHES)	CONN. D.O.T. #	POSTS
16-M	5.0	30X24	80-1613	1
16-H	17.5	60X42	80-1608	2
16-E	35.0	84X60	80-1605	2

CONSTRUCTION AHEAD
SIDEWALK USE RESTRICTED
STATE LIABILITY LIMITED
GENERAL STATUTES SEC 13a-115, 13a-145
COMMISSIONER OF TRANSPORTATION

AREA (SQ. FT)	SIZE (INCHES)	CONN. D.O.T. #	POSTS
16-S	10.0	48X30	80-1619	2

G20 - SERIES

G20-2a

END
ROAD WORK

AREA (SQ. FT)	SIZE (INCHES)	CONN. D.O.T. #	POSTS
8.0	48X24	80-9612	2

ROAD WORK
NEXT 0 MILE(S)
BE PREPARED
TO STOP

VARIABLE MILEAGE

AREA (SQ. FT)	SIZE (INCHES)	CONN. D.O.T. #	POSTS
90.0	120X108	80-9728	

WORK AREA
BE PREPARED
TO STOP

AREA (SQ. FT)	SIZE (INCHES)	CONN. D.O.T. #	POSTS
9.0	36	80-9711	1
16.0	48	80-9712	2

NEXT 0 MILES

VARIABLE MILEAGE

AREA (SQ. FT)	SIZE (INCHES)	CONN. D.O.T. #	POSTS
7.0	72X14	80-9720	

BUSINESS
ACCESS

VARIABLE ARROW
COPY & BORDER - WHITE
BACKGROUND - BLUE

AREA (SQ. FT)	SIZE (INCHES)	CONN. D.O.T. #	POSTS
9.0	36	50-5934	2

M4 - SERIES

M4-8

DETOUR

AREA (SQ. FT)	SIZE (INCHES)	CONN. D.O.T. #	POSTS
2.0	24X12	80-9707	1

M4-9b

DETOUR

VARIABLE ARROW

AREA (SQ. FT)	SIZE (INCHES)	CONN. D.O.T. #	POSTS
5.0	30X24	80-9703	1

M4-8a

END
DETOUR

AREA (SQ. FT)	SIZE (INCHES)	CONN. D.O.T. #	POSTS
3.0	24X18	80-9708	1

M4-9b

DETOUR

VARIABLE ARROW

AREA (SQ. FT)	SIZE (INCHES)	CONN. D.O.T. #	POSTS
6.25	30X30	80-9706	1

M4-10

(R) DETOUR
(L) DETOUR

AREA (SQ. FT)	SIZE (INCHES)	CONN. D.O.T. #	POSTS
6.0	48X18	80-9701R	2
6.0	48X18	80-9702L	2

DETOUR

VARIABLE ARROW

AREA (SQ. FT)	SIZE (INCHES)	CONN. D.O.T. #	POSTS
5.0	30X24	80-9710	1

R1 - SERIES

R1-1

STOP

COPY & BORDER - WHITE
BACKGROUND - RED

AREA (SQ. FT)	SIZE (INCHES)	CONN. D.O.T. #	POSTS
5.19	30	31-0552	1
13.30	48	31-0557	2

R1-2

YIELD

COPY & BORDER - RED
BACKGROUND - WHITE

AREA (SQ. FT)	SIZE (INCHES)	CONN. D.O.T. #	POSTS
3.90	36	31-0523	1
10.83	60	31-0528	2

R4 - SERIES

R4-7

COPY & BORDER - BLACK
BACKGROUND - WHITE

AREA (SQ. FT)	SIZE (INCHES)	CONN. D.O.T. #	POSTS
5.0	24X30	31-1526	1

R4-9

STAY
IN
LANE

COPY & BORDER - BLACK
BACKGROUND - WHITE

AREA (SQ. FT)	SIZE (INCHES)	CONN. D.O.T. #	POSTS
5.0	24X30	31-1517	1
12.0	36X48	31-1518	1
20.0	48X60	31-1519	2

R9 & R11 - SERIES

R9-9

SIDEWALK
CLOSED

COPY & BORDER - BLACK
BACKGROUND - WHITE

AREA (SQ. FT)	SIZE (INCHES)	CONN. D.O.T. #	POSTS
3.75	30X18	80-9076	1

R11-3a

ROAD CLOSED
00 MILES AHEAD
LOCAL TRAFFIC ONLY

VARIABLE MILEAGE
COPY & BORDER - BLACK
BACKGROUND - WHITE

AREA (SQ. FT)	SIZE (INCHES)	CONN. D.O.T. #	POSTS
12.5	60X30	80-9077	2

R9-11

SIDEWALK CLOSED
AHEAD
CROSS HERE

VARIABLE ARROW
COPY & BORDER - BLACK
BACKGROUND - WHITE

AREA (SQ. FT)	SIZE (INCHES)	CONN. D.O.T. #	POSTS
3.0	24X18	80-9074	1

R11-3b

BRIDGE CLOSED
00 MILES AHEAD
LOCAL TRAFFIC ONLY

VARIABLE MILEAGE
COPY & BORDER - BLACK
BACKGROUND - WHITE

AREA (SQ. FT)	SIZE (INCHES)	CONN. D.O.T. #	POSTS
12.5	60X30	80-9078	2

R9-11a

SIDEWALK CLOSED
CROSS HERE

VARIABLE ARROW
COPY & BORDER - BLACK
BACKGROUND - WHITE

AREA (SQ. FT)	SIZE (INCHES)	CONN. D.O.T. #	POSTS
2.0	24X12	80-9075	1

R11-3b

ROAD CLOSED
TO
THRU TRAFFIC

COPY & BORDER - BLACK
BACKGROUND - WHITE

AREA (SQ. FT)	SIZE (INCHES)	CONN. D.O.T. #	POSTS
12.5	60X30	80-9081	2

R11-2

ROAD
CLOSED

COPY & BORDER - BLACK
BACKGROUND - WHITE

AREA (SQ. FT)	SIZE (INCHES)	CONN. D.O.T. #	POSTS
10.0	48X30	80-9080	2

ROAD WORK
AHEAD
FINES
DOUBLED

COPY & BORDER - BLACK
BACKGROUND - WHITE

AREA (SQ. FT)	SIZE (INCHES)	CONN. D.O.T. #	POSTS
14.0	48X42	31-1906	2
22.5	60X54	31-1907	2

W1 - SERIES

W1-4

(L) (R)

AREA (SQ. FT)	SIZE (INCHES)	CONN. D.O.T. #	POSTS
9.0	36	80-9432L	1
9.0	36	80-9431R	1
16.0	48	80-9452L	2
16.0	48	80-9451R	2

W1-6

(L or R)

AREA (SQ. FT)	SIZE (INCHES)	CONN. D.O.T. #	POSTS
8.0	48X24	80-9424	2
12.5	60X30	80-9423	2

W1-8

AREA (SQ. FT)	SIZE (INCHES)	CONN. D.O.T. #	POSTS
3.0	18X24	80-9401	1
5.0	24X30	80-9403	1
7.5	30X36	80-9404	1

BOTH LANES
SHIFT LEFT
AHEAD
(L)

BOTH LANES
SHIFT RIGHT
AHEAD
(R)

AREA (SQ. FT)	SIZE (INCHES)	CONN. D.O.T. #	POSTS
16.0	48	80-9433L	2
16.0	48	80-9435R	2

AHEAD (L) AHEAD (R)

AREA (SQ. FT)	SIZE (INCHES)	CONN. D.O.T. #	POSTS
25.0	60	80-9483L	2
25.0	60	80-9485R	2

BOTH LANES
SHIFT LEFT
(L)

BOTH LANES
SHIFT RIGHT
(R)

AREA (SQ. FT)	SIZE (INCHES)	CONN. D.O.T. #	POSTS
16.0	48	80-9434L	2
16.0	48	80-9436R	2

W1-4c

(L) (R)

AREA (SQ. FT)	SIZE (INCHES)	CONN. D.O.T. #	POSTS
25.0	60	80-9484L	2
25.0	60	80-9486R	2

AHEAD (L) AHEAD (R)

AREA (SQ. FT)	SIZE (INCHES)	CONN. D.O.T. #	POSTS
25.0	60	80-9443L	2
25.0	60	80-9445R	2

W1-4b

(L) (R)

AREA (SQ. FT)	SIZE (INCHES)	CONN. D.O.T. #	POSTS
25.0	60	80-9444L	2
25.0	60	80-9446R	2

W3 - SERIES

W3-1

OCTAGON - RED W/ WHITE BORDER
ARROW & BORDER - BLACK
BACKGROUND - FLUORESCENT ORANGE

AREA (SQ. FT)	SIZE (INCHES)	CONN. D.O.T. #	POSTS
9.0	36	80-9050	1
16.0	48	80-9051	2

W3-2

TRIANGLE - RED W/ WHITE BORDER
ARROW & BORDER - BLACK
BACKGROUND - FLUORESCENT ORANGE

AREA (SQ. FT)	SIZE (INCHES)	CONN. D.O.T. #	POSTS
9.0	36	80-9054	1
16.0	48	80-9055	2

W3-3

TOP CIRCLE - RED
MIDDLE CIRCLE - YELLOW
BOTTOM CIRCLE - GREEN
COPY & BORDER - BLACK
BACKGROUND - FLUORESCENT ORANGE

AREA (SQ. FT)	SIZE (INCHES)	CONN. D.O.T. #	POSTS
9.0	36	80-9052	1
16.0	48	80-9053	2

W4-W6 - SERIES

W4-2

(L) (R)

AREA (SQ. FT)	SIZE (INCHES)	CONN. D.O.T. #	POSTS
16.0	48	80-9918L	2
16.0	48	80-9917R	2

W6-3

AREA (SQ. FT)	SIZE (INCHES)	CONN. D.O.T. #	POSTS
16.0	48	80-9945	2

W8-W9 - SERIES

W8-1

BUMP

AREA (SQ. FT)	SIZE (INCHES)	CONN. D.O.T. #	POSTS
9.0	36	80-9901	1
16.0	48	80-9902	2

BUMP
AHEAD

AREA (SQ. FT)	SIZE (INCHES)	CONN. D.O.T. #	POSTS
9.0	36	80-9801	1
16.0	48	80-9802	2

W9-2

LANE ENDS
MERGE
LEFT
(L)

LANE ENDS
MERGE
RIGHT
(R)

AREA (SQ. FT)	SIZE (INCHES)	CONN. D.O.T. #	POSTS
16.0	48	80-9910L	2
16.0	48	80-9911R	2

W13 - SERIES

W13-1

00
M.P.H.

SUBPLATE
VARIABLE SPEED

AREA (SQ. FT)	SIZE (INCHES)	CONN. D.O.T. #	POSTS
4.0	24	80-9569	1
6.25	30	80-9567	1

REDUCE
SPEED TO
00 MPH

VARIABLE SPEED

AREA (SQ. FT)	SIZE (INCHES)	CONN. D.O.T. #	POSTS
9.0	36	80-9506	1
16.0	48	80-9508	2

W3-5

SPEED
LIMIT
00

VARIABLE SPEED

AREA (SQ. FT)	SIZE (INCHES)	CONN. D.O.T. #	POSTS
9.0	36	80-9520	1
16.0	48	80-9521	2

W-16 - SERIES

W16-15P

NEW

COPY & BORDER - BLACK
BACKGROUND - ORANGE

AREA (SQ. FT)	SIZE (INCHES)	CONN. D.O.T. #	POSTS
2.0	24X12	80-9049	

W20 - SERIES

W20-1

ROAD
WORK
AHEAD

AREA (SQ. FT)	SIZE (INCHES)	CONN. D.O.T. #	POSTS
6.25	30	80-9602	1
9.0	36	80-9603	1
16.0	48	80-9604	2

LEFT
LANES
CLOSED
(L)

RIGHT
LANES
CLOSED
(R)

AREA (SQ. FT)	SIZE (INCHES)	CONN. D.O.T. #	POSTS
(L) 16.0	48	80-9836	2
(R) 16.0	48	80-9839	2

W20-7a

AREA (SQ. FT)	SIZE (INCHES)	CONN. D.O.T. #	POSTS
9.0	36	80-9803	1
16.0	48	80-9804	2

W20-1

ROAD
WORK
0000 FT

VARIABLE DISTANCE

AREA (SQ. FT)	SIZE (INCHES)	CONN. D.O.T. #	POSTS
9.0	36	80-9614	1
16.0	48	80-9615	2

LEFT
TWO LANES
CLOSED
AHEAD
(L)

RIGHT
TWO LANES
CLOSED
AHEAD
(R)

AREA (SQ. FT)	SIZE (INCHES)	CONN. D.O.T. #	POSTS
(L) 16.0	48	80-9837	2
(R) 16.0	48	80-9838	2

SLOW MOVING
TRUCKS AHEAD

AREA (SQ. FT)	SIZE (INCHES)	CONN. D.O.T. #	POSTS
32.0	96X48	80-9815	2

W20-2

DETOUR
1000 FT

AREA (SQ. FT)	SIZE (INCHES)	CONN. D.O.T. #	POSTS
9.0	36	80-9805	1
16.0	48	80-9806	2

LEFT LANE
CLOSED
AHEAD
(L)

RIGHT LANE
CLOSED
AHEAD
(R)

AREA (SQ. FT)	SIZE (INCHES)	CONN. D.O.T. #	POSTS
(L) 16.0	48	80-9847	2
(R) 16.0	48	80-9848	2

W16-9P

AHEAD

AREA (SQ. FT)	SIZE (INCHES)	CONN. D.O.T. #	POSTS
2.0	24X12	80-9870	
3.75	30X18	80-9871	

ONE LANE
ROAD
AHEAD

AREA (SQ. FT)	SIZE (INCHES)	CONN. D.O.T. #	POSTS
9.0	36	80-9834	1
16.0	48	80-9835	2

LEFT
LANE
CLOSED
(L)

RIGHT
LANE
CLOSED
(R)

AREA (SQ. FT)	SIZE (INCHES)	CONN. D.O.T. #	POSTS
(L) 16.0	48	80-9846	2
(R) 16.0	48	80-9849	2

W16-3aP

1 MILE

VARIABLE MILEAGE

AREA (SQ. FT)	SIZE (INCHES)	CONN. D.O.T. #	POSTS
2.5	30X12	80-9872	
4.5	36X18	80-9873	

W21 - SERIES

W21-6

SURVEY
CREW

AREA (SQ. FT)	SIZE (INCHES)	CONN. D.O.T. #	POSTS
9.0	36	80-9607	1

W22 - SERIES

W22-1

BLASTING
ZONE
1000 FT

AREA (SQ. FT)	SIZE (INCHES)	CONN. D.O.T. #	POSTS
9.0	36	80-9620	1
16.0	48	80-9625	2

W22-2

TURN OFF
2-WAY RADIO
AND
CELL PHONE

AREA (SQ. FT)	SIZE (INCHES)	CONN. D.O.T. #	POSTS
10.5	42X36	80-9623	2

W22-3

END
BLASTING
ZONE

AREA (SQ. FT)	SIZE (INCHES)	CONN. D.O.T. #	POSTS
10.5	42X36	80-9621	2

(VARIABLE LEGEND)

AREA (SQ. FT)	SIZE (INCHES)	CONN. D.O.T. #	POSTS
4.17	60X10	80-9913	2
12.0	96X18	80-9914	2
3.33	48X10	80-9916	2

BLANK OR
VARIABLE LEGEND

AREA (SQ. FT)	SIZE (INCHES)	CONN. D.O.T. #	POSTS
9.0	36	80-9933	1
16.0	48	80-9934	2

USE
SHOULDER

AREA (SQ. FT)	SIZE (INCHES)	CONN. D.O.T. #	POSTS
16.0	48	80-9956	2

(VARIABLE
LEGEND)

AREA (SQ. FT)	SIZE (INCHES)	CONN. D.O.T. #	POSTS
12.5	60X30	80-9928	2
24.0	72X48	80-9929	2

SHOULDER
CLOSED
AHEAD
(1)

SHOULDER
CLOSED
(2)

	AREA (SQ. FT)	SIZE (INCHES)	CONN. D.O.T. #	POSTS
(1)	16.0	48	80-9957	2
(2)	9.0	36	80-9958	1
(2)	16.0	48	80-9959	2

STOP-SLOW PADDLE

SIDE A
STOP

SIDE B
SLOW

SIDE A
BACKGROUND - RED
COPY & BORDER - WHITE
SIDE B
BACKGROUND - ORANGE
COPY & BORDER - BLACK PLAIN

AREA (SQ. FT)	SIZE (INCHES)	CONN. D.O.T. #	POSTS
2.25	18	80-9950	PADDLE

NOTES:

1. R1-SERIES SIGN THE LEGEND "O.S.T.A." SHALL APPEAR.
2. POSTS - SEE STANDARD SHEET TR-1208_02 - "METAL SIGN POSTS AND SIGN MOUNTING DETAILS".
3. POSTS SHALL BE 4 LBS./FT.
4. ALL POSTS NOTED ARE FOR LONG TERM INSTALLATION. SEE STANDARD SHEET TR-1208_02.
5. FOR TEMPORARY SUPPORTS SEE STANDARD SHEET TR-1220_02 - "CONSTRUCTION SIGN SUPPORTS AND CHANNELIZING DEVICES".
6. FOR SPECIFIC SIGN DESIGN, CONTACT CONN. D.O.T., DIVISION OF TRAFFIC ENGINEERING. FOR BOLT HOLE PATTERN REFER TO FHWA PUBLICATION "STANDARD HIGHWAY SIGNS". SIGNS OF DIFFERENT DIMENSIONS TO BE ERECTED ON THE SAME POSTS, OR SPAN/MAST ARM MOUNTED, MAY REQUIRE SPECIAL BOLT HOLE PATTERNS.
7. ALL CONSTRUCTION SIGNS TO BE PAID FOR UNDER THE CONSTRUCTION SIGNS ITEM IN THE CONTRACT.
8. MATERIALS & COLORS SHALL CONFORM TO STATE SPECIFICATIONS.

MATERIALS:

SIGNS AND THEIR PORTABLE SUPPORTS SHALL CONFORM TO THE REQUIREMENTS OF NCHRP REPORT 350 (TL-3) OR THE AASHTO MASH FOR CATEGORY 2 DEVICES. ALUMINUM THICKNESS FOR POST MOUNTED SIGNS SHALL BE .100" EXCEPT SIGN #s. 80-1605, 80-9914, 80-9815, 80-9728, 80-9519, & 51-6147 (L OR R) WHICH SHALL BE .125", PLYWOOD THICKNESS FOR POST MOUNTED SIGNS SHALL BE 1/2" EXTERIOR GRADE A-C OR BETTER. SIGN BLANKS SHALL HAVE ONE COAT OF PRIMER PAINT PRIOR TO APPLICATION OF RETROREFLECTIVE SHEETING & COPY.

COLORS:

BACKGROUND - FLUORESCENT ORANGE - EXCEPT AS NOTED.
LEGEND - BLACK - EXCEPT AS NOTED.
ALL SIGNS WITH FLUORESCENT ORANGE BACKGROUND TO USE TYPE VIII RETROREFLECTIVE SHEETING.
ALL OTHER SIGNS TO USE TYPE IX RETROREFLECTIVE SHEETING.

REV.	DATE	REVISION DESCRIPTION
6	8-2018	REVISED POST REQUIREMENTS AND SHEETING TYPE.
5	8-2015	UPDATED PER MUTCD AND FORM 816 JAN 2015 REVISION.
4	6-2012	REVISED NOTE #1 TO REFERENCE "O.S.T.A."
3	4-2012	REVISED NEW SIGNAL SIGN(S) TO CONFORM TO 2009 MUTCD.
2	2-2011	MINOR REVISIONS.
1	3-2010	REMOVED OBSOLETE SIGNS (50-5925, 50-5935).

THE INFORMATION, INCLUDING ESTIMATED QUANTITIES OF WORK, SHOWN ON THESE SHEETS IS BASED ON LIMITED INVESTIGATIONS BY THE STATE AND IS IN NO WAY WARRANTED TO INDICATE THE CONDITIONS OF ACTUAL QUANTITIES OF WORK WHICH WILL BE REQUIRED.

Plotted Date: 8/10/2018

NOT TO SCALE

STATE OF CONNECTICUT
DEPARTMENT OF TRANSPORTATION

Filename: TR-1220_01_1_2018.dgn Model: TR-1220_01

SUBMITTED BY: NAME/DATE/TIME: Mark F. Makuch, P.E. 2018.08.17 09:11:08-04'00'

APPROVED BY: NAME/DATE/TIME: Mark F. Carlino, P.E. 2018.08.21 07:49:34-04'00'

CTDOT
STANDARD SHEET

OFFICE OF ENGINEERING

STANDARD SHEET TITLE:

SIGNS FOR CONSTRUCTION AND PERMIT OPERATIONS

STANDARD SHEET NO.: TR-1220_01

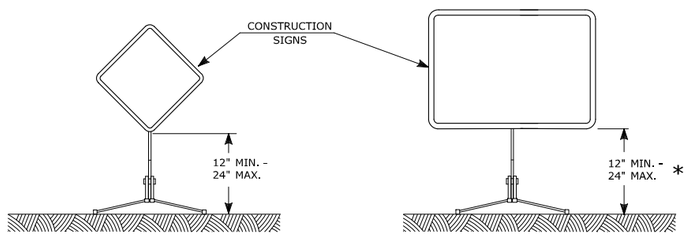

DIAMOND SHAPE **RECTANGLE SHAPE**

PORTABLE CONSTRUCTION SIGNS

NOTES FOR PORTABLE SIGN SUPPORTS:

1. SIGNS AND THEIR PORTABLE SUPPORTS SHALL CONFORM TO THE REQUIREMENTS OF NCHRP REPORT 350 (TL-3) OR THE AASHTO MASH FOR CATEGORY 2 DEVICES AND THE LATEST EDITION OF THE MUTCD.
2. MOUNTING HEIGHT OF SIGNS SHALL BE A MINIMUM OF 12" AND A MAXIMUM OF 24". SIGNS SHALL BE MOUNTED HIGHER AS NEEDED TO MEET FIELD CONDITIONS OR AS DIRECTED BY THE ENGINEER.
3. THE ENGINEER RESERVES THE RIGHT TO REJECT ANY SUPPORT DEEMED UNSUITABLE FOR THE PURPOSE INTENDED.
4. PORTABLE SIGN SUPPORTS SHALL BE STABILIZED IN A MANNER THAT WILL NOT AFFECT THEIR COMPLIANCE WITH NCHRP REPORT 350 (TL-3) OR THE AASHTO MASH FOR CATEGORY 2 DEVICES.
5. PORTABLE CONSTRUCTION SIGN SUPPORTS SHOULD NOT BE USED FOR DURATION OF MORE THAN 3 DAYS EXCEPT FOR R9-8 THROUGH R9-11a SERIES, R11 SERIES, W1-6 THROUGH W1-8 SERIES, M4-10, AND E5-1. SEE STANDARD SHEET TR-1220_01 - "SIGNS FOR CONSTRUCTION AND PERMIT OPERATIONS" FOR SIGN DETAILS.

* FOR E5-1 (EXIT SIGNS) USE MIN 48".

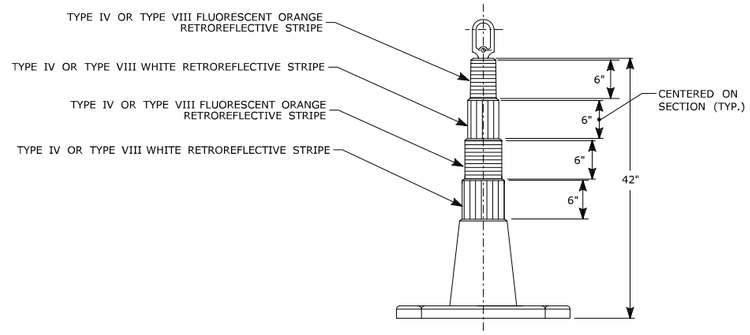

42" TRAFFIC CONE

NOTES:

1. TRAFFIC CONES SHALL CONFORM TO THE REQUIREMENTS OF NCHRP REPORT 350 (TL-3) OR THE AASHTO MASH FOR CATEGORY 1 DEVICES AND THE LATEST EDITION OF THE MUTCD.
2. IF RUBBER CONES ARE USED, THEY SHALL HAVE INTERIOR RIBS FOR RIGIDITY.
3. IF PLASTIC CONES ARE USED, THEY SHALL BE COLOR IMPREGNATED.
4. THE ENGINEER RESERVES THE RIGHT TO REJECT ANY CONE DEEMED UNSUITABLE FOR THE PURPOSE INTENDED.
5. THE ENTIRE AREA OF FLUORESCENT ORANGE AND WHITE STRIPES SHALL BE RETROREFLECTIVE SHEETING AS REQUIRED IN THE SPECIFICATIONS.
6. THE SECTIONS OF CONES NOT COVERED WITH RETROREFLECTIVE STRIPES SHALL BE ORANGE.

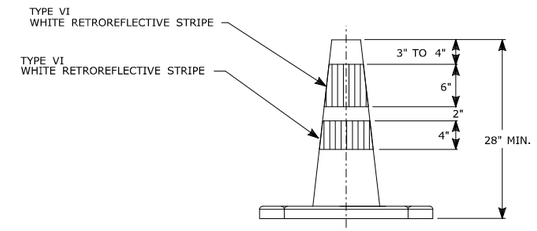

TRAFFIC CONE

NOTES:

1. TRAFFIC CONES SHALL CONFORM TO THE REQUIREMENTS OF NCHRP REPORT 350 (TL-3) OR THE AASHTO MASH FOR CATEGORY 1 DEVICES AND THE LATEST EDITION OF THE MUTCD.
2. IF RUBBER CONES ARE USED, THEY SHALL HAVE INTERIOR RIBS FOR RIGIDITY.
3. IF PLASTIC CONES ARE USED, THEY SHALL BE COLOR IMPREGNATED.
4. THE ENGINEER RESERVES THE RIGHT TO REJECT ANY CONE DEEMED UNSUITABLE FOR THE PURPOSE INTENDED.
5. THE ENTIRE AREA OF WHITE STRIPES SHALL BE RETROREFLECTIVE SHEETING AS REQUIRED IN THE SPECIFICATIONS.
6. TRAFFIC CONES NOT USED AT NIGHT MAY UTILIZE TYPE III SHEETING.
7. THE SECTIONS OF CONES NOT COVERED WITH RETROREFLECTIVE STRIPES SHALL BE ORANGE.

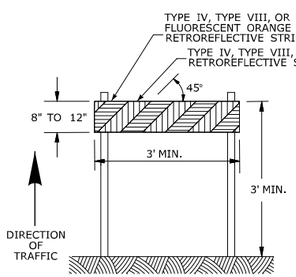

TYPE I BARRICADE

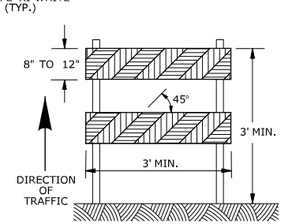

TYPE II BARRICADE

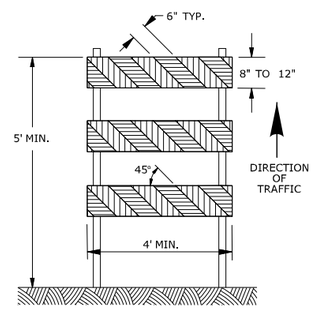

TYPE III BARRICADE

CONSTRUCTION BARRICADES

NOTES:

1. CONSTRUCTION BARRICADES SHALL CONFORM TO THE REQUIREMENTS OF NCHRP REPORT 350 (TL-3) OR THE AASHTO MASH AND THE LATEST EDITION OF THE MUTCD.
2. MARKINGS FOR BARRICADE RAILS SHALL BE ALTERNATE FLUORESCENT ORANGE AND WHITE STRIPES SLOPING DOWNWARD IN THE DIRECTION TRAFFIC IS TO PASS. 6" WIDE STRIPES SHALL BE USED.
3. THE ENTIRE AREA OF FLUORESCENT ORANGE AND WHITE STRIPES SHALL BE RETROREFLECTIVE SHEETING AS REQUIRED IN THE SPECIFICATIONS. THE SIDES OF BARRICADES FACING TRAFFIC SHALL HAVE RETROREFLECTIVE RAIL FACES.
4. THE ENGINEER RESERVES THE RIGHT TO REJECT ANY BARRICADE DEEMED UNSUITABLE FOR THE PURPOSE INTENDED.
5. CORNERS OF BARRICADE RAILS SHALL BE ROUNDED.
6. SIGNS MAY ONLY BE INSTALLED ON TYPE III BARRICADES AND SHALL BE PLACED SO AS TO COVER NO MORE THAN ONE BARRICADE RAIL.

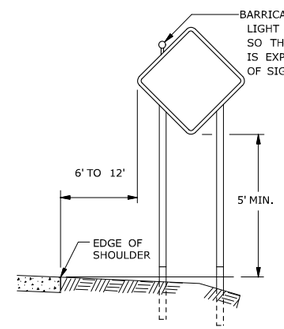

RURAL AREA

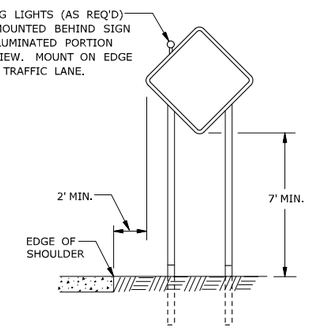

URBAN AREA

PLACEMENT OF CONSTRUCTION SIGNS TYPICAL LONG TERM INSTALLATION

NOTES:

SUPPORTS SHALL BE METAL SIGN POSTS AND HAVE BREAK-AWAY FEATURES.

REFER TO STANDARD SHEETS:
TR-1208_01 - "SIGN PLACEMENT AND RETROREFLECTIVE STRIP DETAILS."
TR-1208_02 - "METAL SIGN POSTS AND SIGN MOUNTING DETAILS."

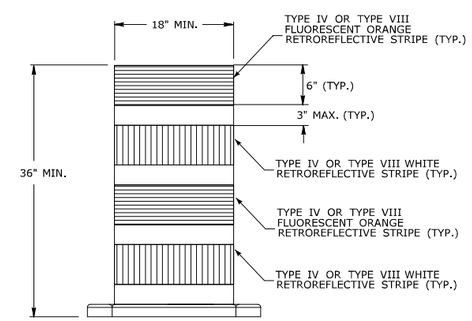

TRAFFIC DRUM FRONT VIEW

NOTES:

1. TRAFFIC DRUM SHALL CONFORM TO THE REQUIREMENTS OF NCHRP REPORT 350 (TL-3) OR THE AASHTO MASH FOR CATEGORY 1 DEVICES AND THE LATEST EDITION OF THE MUTCD.
2. THE ENGINEER RESERVES THE RIGHT TO REJECT ANY DRUM DEEMED UNSUITABLE FOR THE PURPOSE INTENDED.
3. THE ENTIRE AREA OF FLUORESCENT ORANGE AND WHITE STRIPES SHALL BE RETROREFLECTIVE SHEETING AS REQUIRED IN THE SPECIFICATIONS.
4. THE SECTIONS OF DRUMS NOT COVERED WITH RETROREFLECTIVE STRIPES SHALL BE ORANGE.

REV.	DATE	REVISION DESCRIPTION
3	8-2018	UPDATED SHEETING TYPE AND COLOR.
2	8-2015	UPDATED PER MUTCD AND FORM 816 JAN 2015 REVISION.
1	2-2011	MINOR REVISIONS.

THE INFORMATION, INCLUDING ESTIMATED QUANTITIES OF WORK, SHOWN ON THESE SHEETS IS BASED ON LIMITED INVESTIGATIONS BY THE STATE AND IS IN NO WAY WARRANTED TO INDICATE THE CONDITIONS OF ACTUAL QUANTITIES OF WORK WHICH WILL BE REQUIRED.

Plotted Date: 8/10/2018

NOT TO SCALE

STATE OF CONNECTICUT
DEPARTMENT OF TRANSPORTATION

Filename: TR-1220_02_3_2018.dgn Model: TR-1220_02

SUBMITTED BY: NAME/DATE/TIME: Mark F. Makuch, P.E. 2018.08.17 09:12:43-04'00'

APPROVED BY: NAME/DATE/TIME: Mark F. Carlino, P.E. 2018.08.21 07:49:51-04'00'

CTDOT STANDARD SHEET

OFFICE OF ENGINEERING

STANDARD SHEET TITLE:

CONSTRUCTION SIGN SUPPORTS AND CHANNELIZING DEVICES

STANDARD SHEET NO.: TR-1220_02